NAMDARAN
PETROGAS INDUSTRIES

شرکت صنایع پتروگاز نامداران

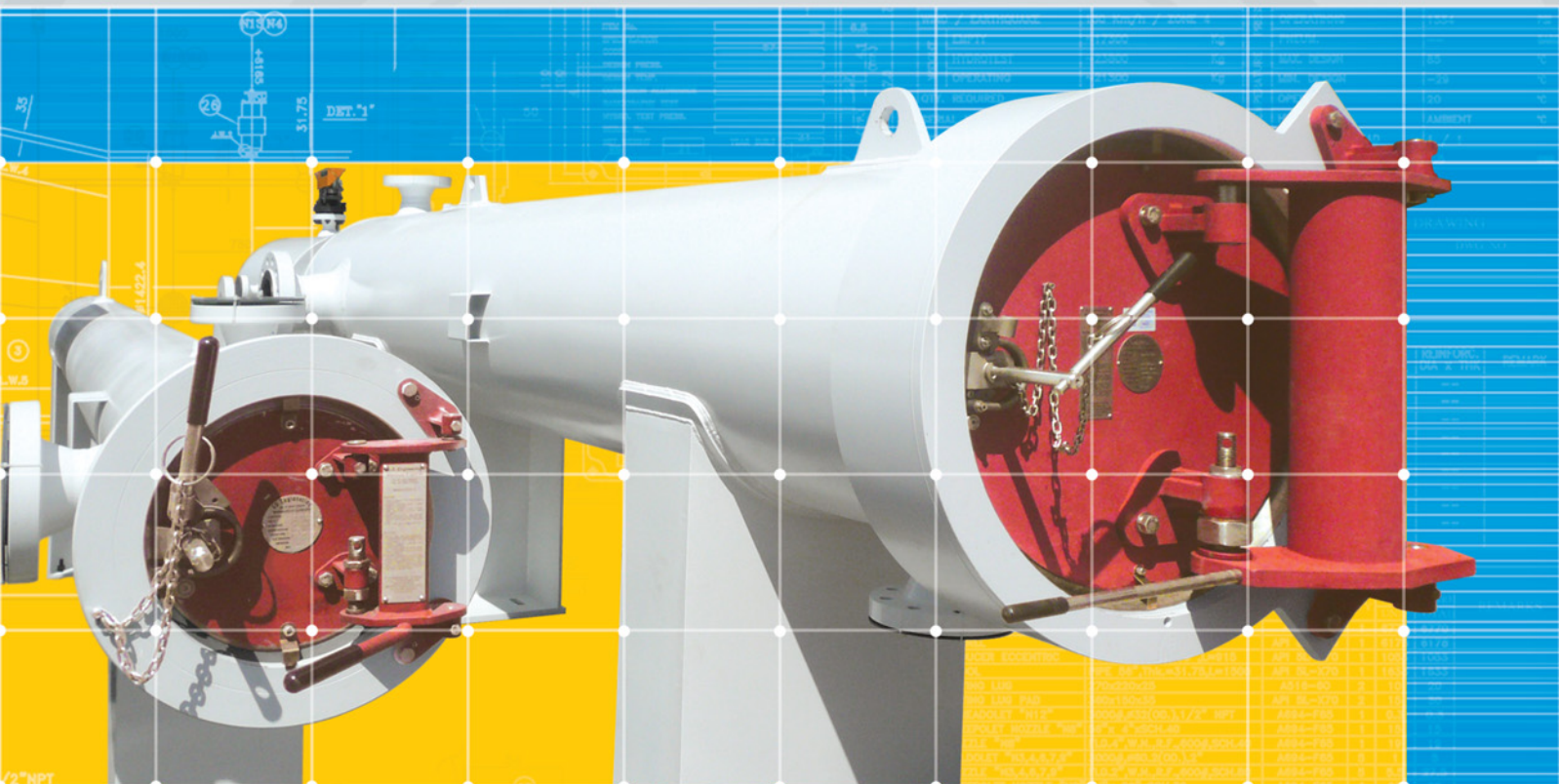

LAUNCHER & RECEIVER

NAMDARAN
PETROGAS INDUSTRIES

INTRODUCTION

Namdaran Petrogas Industries is a leading company in the design and manufacturing of pressure parts and pipeline equipments to the Oil and Gas, petrochemical and other process industries.

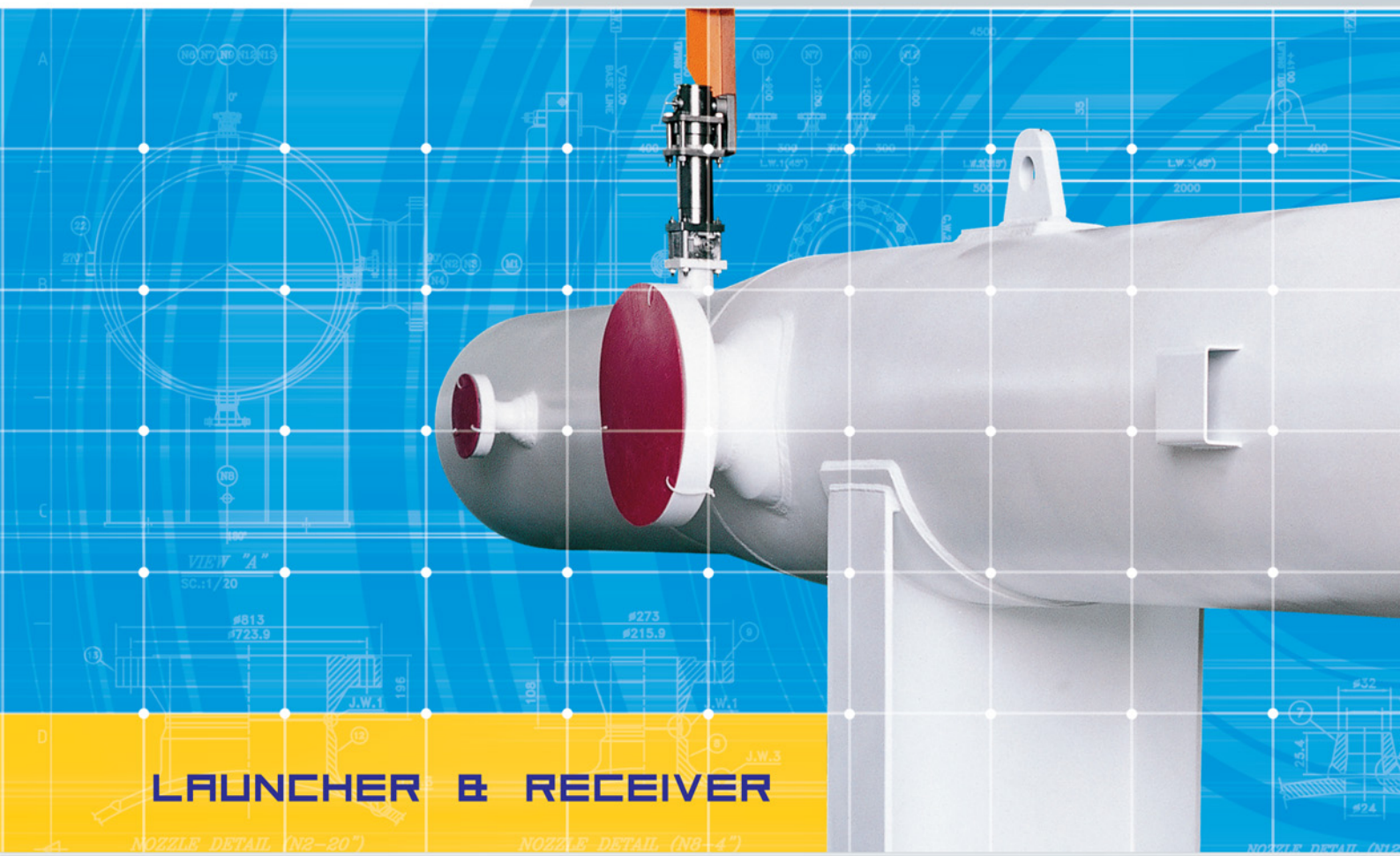

LAUNCHER & RECEIVER

ISO 9001
CERTIFIED ORGANIZATION

ISOTS 29001:2003
CERTIFIED ORGANIZATION

DESCRIPTION

Pig Launcher and Receiver Traps are custom manufactured for sub-sea, off-shore and onshore applications. Pig launcher is used to launch the pig into the pipeline, and pig receiver is used to receive the pig after they have made a successful launch. The choice of these pig traps will depend on the type of pig to be run and pipeline design conditions.

All equipment are designed and manufactured according to pipeline and vessel Code Standard (NACE, ASME VIII, BS 5500 and ANSI/ASME B31.3, B31.4, B31.8, etc).

Our capacity of production allows matching pipe ranging from 3" to 56" with ANSI Ratings of 150# to 2500#, using carbon steel, stainless steel and alloy steel materials.

MULTIPLE UNITS APPLICATION

These units are designed to allow the sequential launching of pigs and spheres, in conjunction with release fingers and/or coordinated valve operation. The launch process can be controlled remotely enabling traps to be installed on unmanned platforms and facilities. This sequential launching to take place without having to repeatedly de-pressurize and re-pressurize after each launching. The process can also be controlled from a remote location. This is particularly relevant on unmanned platforms such as offshore platforms and sour service applications.

The launch of spheres or pigs is controlled by automatic or manual release fingers which allow individual sequential launching into the pipeline.

From basic body to a skid-mounted, fully-automated unit can be provided to meet client exact requirements. A fully staffed and experienced engineering department can provide all the design disciplines necessary to complete scraper trap packages like structural design, piping stress analysis, and instrumentation logic.

Namdaran Petrogas Ind. will design systems to meet specific operational requirements. This can include not limited to:

- Multiple valve operation
- Automatic or manually operated sphere release systems
- Integrated skid mounted packages

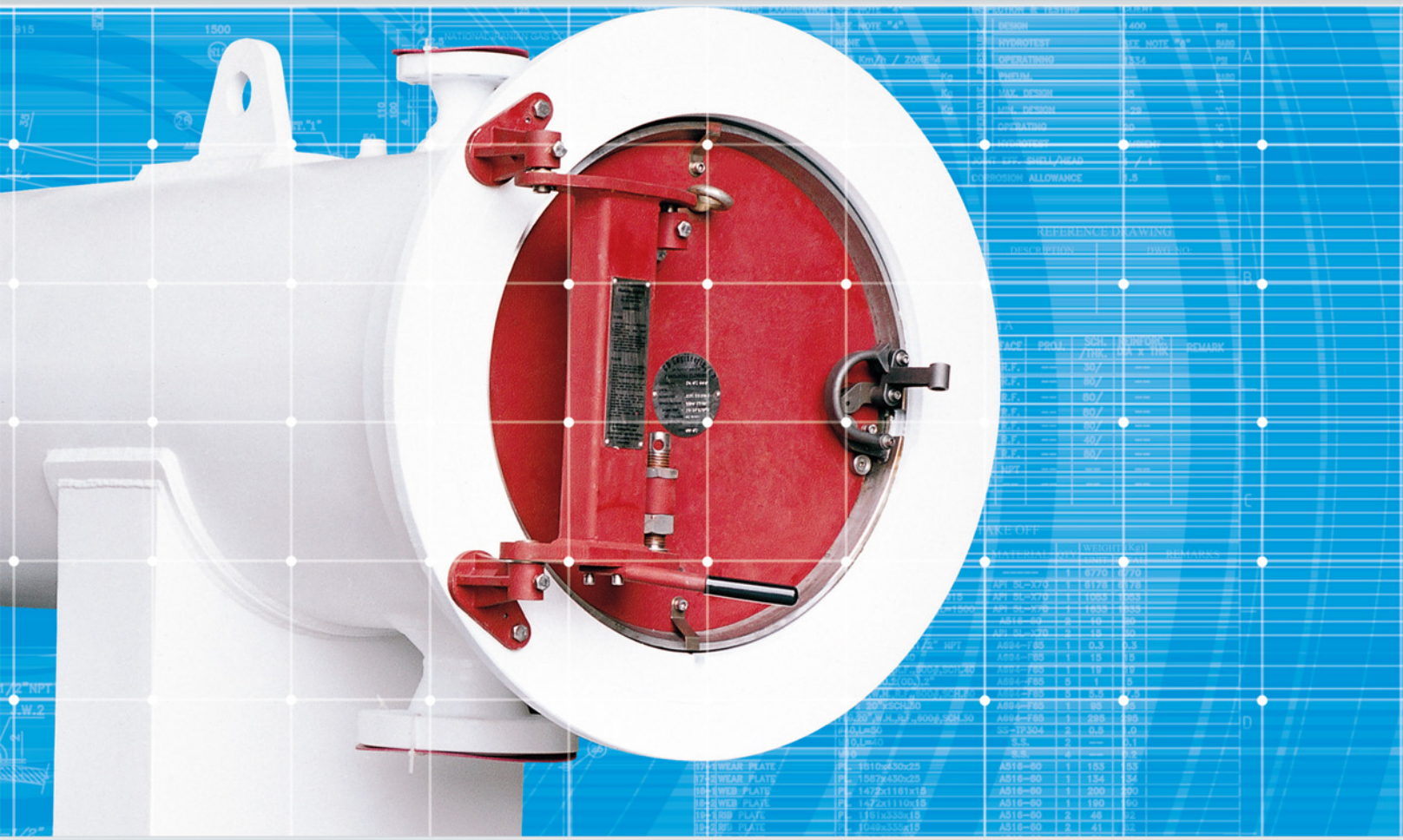

ACCESSORIES & OPTIONS

Optional features and accessory equipment include:

- Baskets
- Bi-directional Trap Systems
- Pig signalers (manual or automatic, remote or local)
- Saddle Supports
- Pig Launching Systems (manual or automatic)
- Inclined, Declined or Vertical Construction
- Pig Storage
- All Controls, Drives and Instrumentation
- Liquid Handling System

PIG SIGNALER

●All pig signalers are bi-directional due to a pivot less tumbler mechanism, which utilizes laminated trigger blades for use with on-line inspection pigs.
●Pig signalers are economically priced units and are very simple to install and operate, providing adjustable on site penetration and giving the operator simple visual indication with a single action reset.

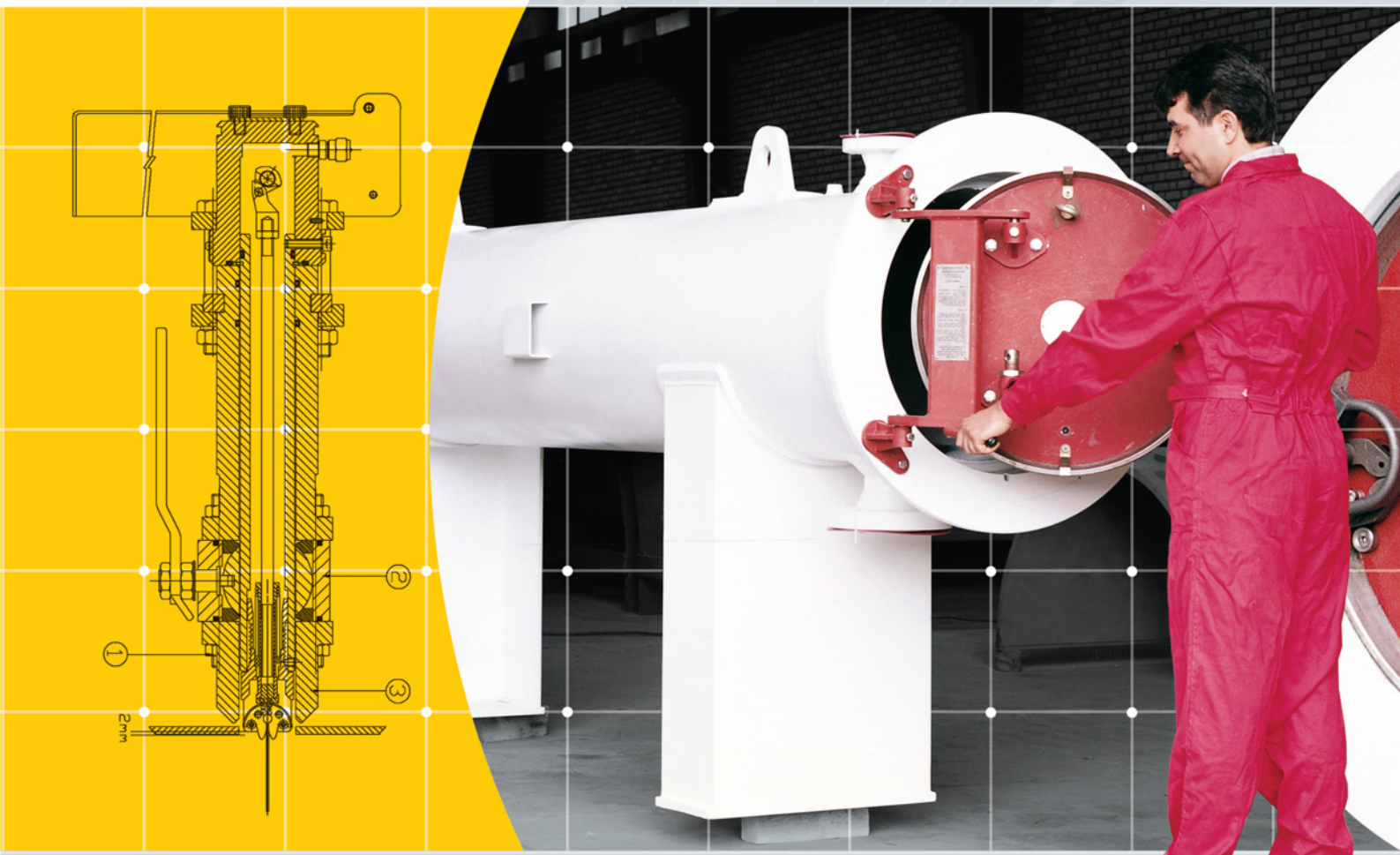

●Pig signalers are manufactured in three pressure classifications – up to class 600, class 900, class 1500 and class 2500. Standard models are designed for use at temperatures from -29ºC to 200ºC, dependent upon the flowing products and pressure in the line. Alternative elastomer seals can be provided for operating temperatures outside this range.
●Pig signalers are available in a wide range of models, mechanically operated signal flags, electrical auto resetting switches, or mechanical and electrical signals in combination, to suit either welded, or flanged type mounting.
●Pig signalers can be supplied with integral valve to allow removal under line pressure.
●Pig signalers feature a unique trigger penetration adjustment facility to cater for variations in line thickness and flange standout.

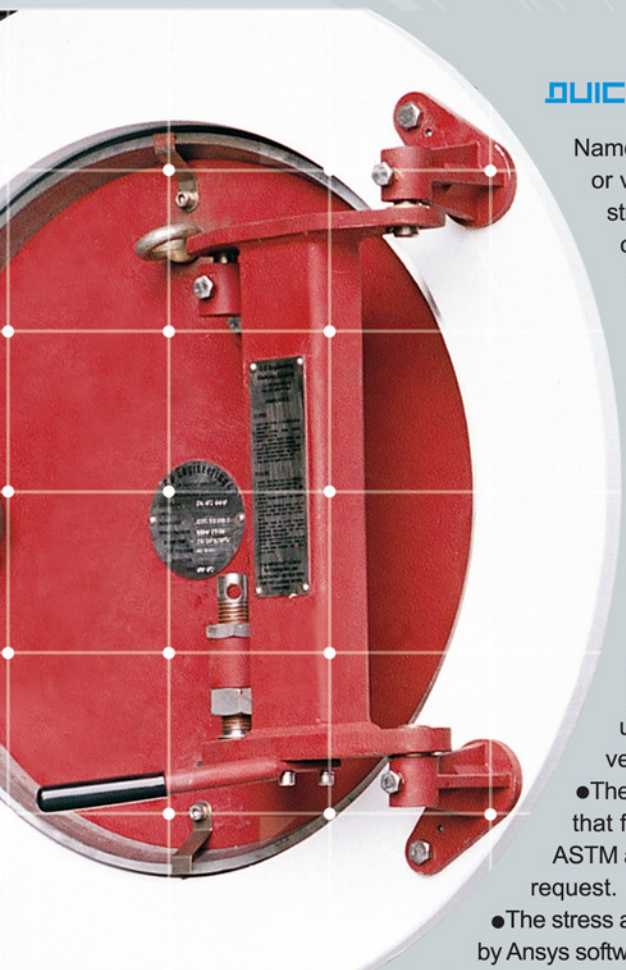

QUICK OPENING CLOSURE

Namdaran Petrogas Industries closures provide horizontal or vertical access to pipeline pig traps, filters, coalesces, strainers, separators, meter skid systems, hydro cyclones, or any other type of pressure vessel. Our quick opening closures can be operated safely at remarkable speed with no special tools required.

All size of closure can be opened or closed by one person in less than one minute.

- The closures are available to suit a wide variety of vessel sizes and pressures, from 6" to 64" diameter and any pressures from Class 150 up to Class 2500 or higher upon request.
- The closures are designed to meet requirements of ASME VIII Div. I or II. furthermore, alternative pressure vessel design codes, such as ASME VIII Div. 2, PD550 and EN13445 can also be accommodated.
- The locking mechanism incorporates a hand operated pressure warning screw, which prevents the door being unlocked until there is no residual pressure inside the vessel.
- The closure hub and door are manufactured from materials that fully comply with the requirements of ASME SEC. II / ASTM and NACE MR 01-75 / ISO 15156 Latest Edition upon request.
- The stress and strain analysis has been successfully performed by Ansys software in order to meet the design code requirements.

NAMDARAN
PETROGAS INDUSTRIES

PIG RECEIVER

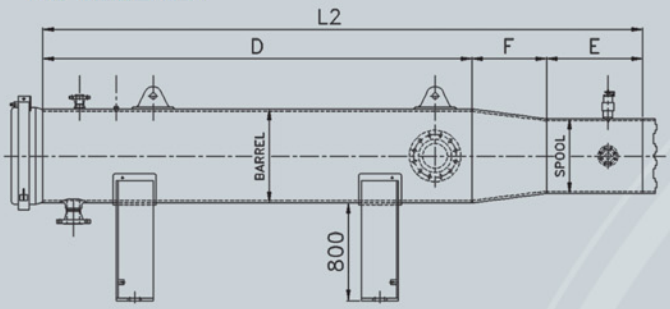

PIG LAUNCHER

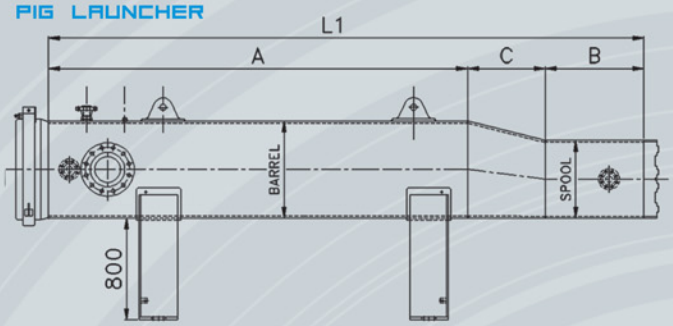

PIG LAUNCHER AND RECEIVER DIMENSIONS FOR GAS PIPELINE

BARREL (in)	10	12	16	16	20	24	30	36	42	48	48	56	64
MAIN LINE (in)	6	8	10	12	16	20	24	30	36	40	42	48	56
A (mm)	3230	4100	4050	4050	4300	3000	3400	3550	3850	3800	3800	3580	3650
B (mm)	500	500	500	600	600	1000	1000	1000	1500	1500	1500	1500	1500
C (mm)	178	203	356	356	508	508	610	610	610	711	711	915	915
L_1 (mm)	3908	4803	4906	5006	5408	4508	5010	5160	5960	6011	6011	5996	6065
D (mm)	2000	2300	4300	4360	4360	3650	3950	4000	4000	4000	4900	5000	4800
E (mm)	500	500	500	600	600	1000	1000	1000	1500	1500	1500	2000	2000
F (mm)	178	203	356	356	508	508	610	610	610	711	711	915	915
L_2 (mm)	2678	3003	5156	5316	5468	5158	5560	5610	6110	6211	7111	7915	7715
KICKER (in)	4	4	4	4	6	8	8	10	12	16	16	16	20
P.G (in)	1/2	1/2	1/2	1/2	1/2	1/2	1/2	1/2	1/2	1/2	1/2	1/2	1/2
PIG SIG. (in)	2	2	2	2	2	2	2	2	2	2	2	2	2
VENT (in)	2	2	2	2	4	4	4	4	4	4	4	4	4
DRAIN (in)	4	4	4	4	4	4	4	4	6	6	6	6	6
TROLLY	-	-	-	-	-	yes	yes	yes	yes	yes	yes	yes	yes
JIB CRAIN	-	-	-	-	-	yes	yes	yes	yes	yes	yes	yes	yes
CAPACITY (ton)	-	-	-	-	-	1	1	1	2	2	2	3	3
BASKET	-	-	-	-	-	yes	yes	yes	yes	yes	yes	yes	yes

Remark:

- Dimensions are approximate and many change without notice.
- Certified dimensional drawings and pricing available upon request.

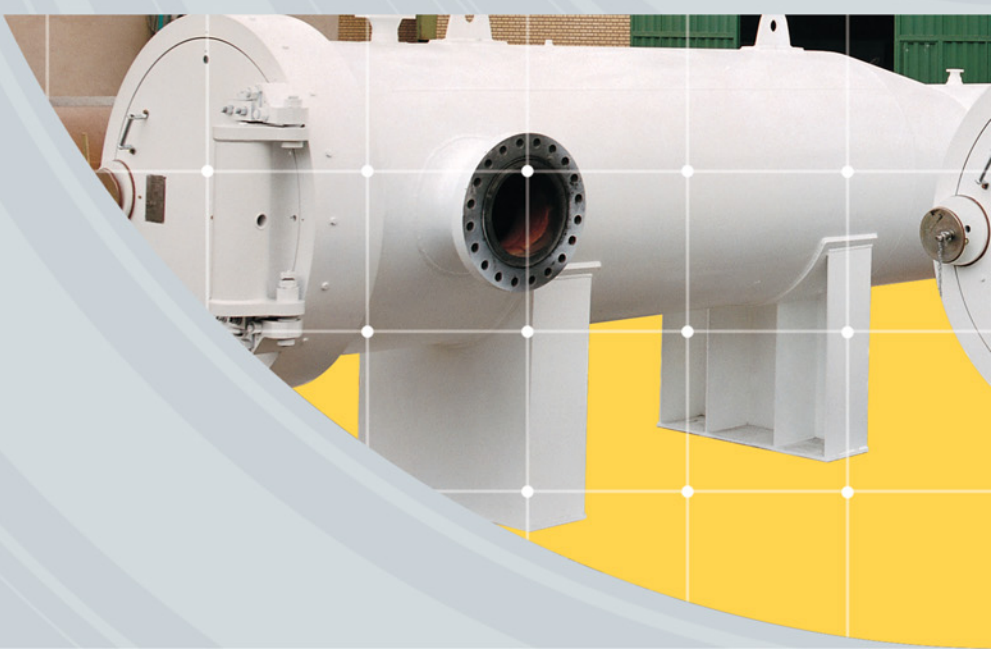

PIG RECEIVER

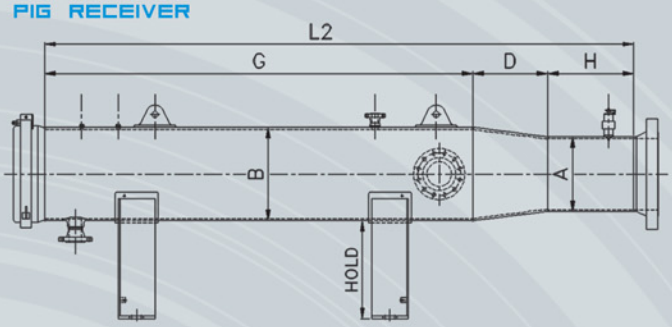

PIG LAUNCHER

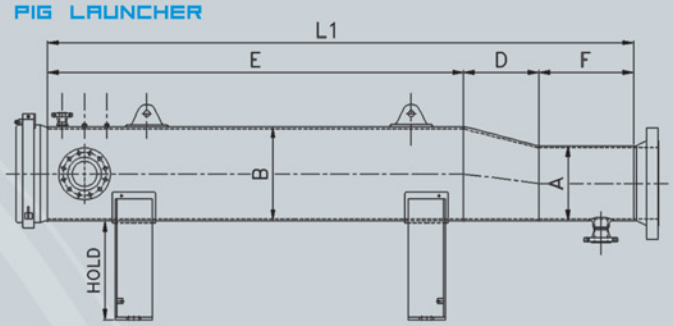

PIG LAUNCHER AND RECEIVER DIMENSIONS FOR OIL PIPELINE

Size		Dimension of pig Launcher & receiver trap according to IPS-D-PI-111					Dimension of pig Launcher & receiver trap for Intelligent pig according to S4L-6516					Other				
A (in)	B (in)	E (mm)	G (mm)	H (mm)	L1 (mm)	L2 (mm)	E (mm)	G (mm)	H (mm)	L1 (mm)	L2 (mm)	F (mm)	D (mm)	Kicker (in)	Vent (in)	Drain (in)
6	8	1000	2000	600	2152	2752	2800	2800	2800	3952	5752	1000	152	2	2	2
8	10	1000	2000	600	2178	2778	4100	3900	3900	5278	7978	1000	178	2	2	2
10	12	1000	2000	600	2203	2803	4300	4300	4300	5503	8803	1000	203	3	2	2
12	16	1000	2000	600	2356	2965	4300	4300	4300	5656	8956	1000	356	4	2	2
14	18	1000	2000	600	2381	2981	4800	4800	4800	6181	9981	1000	381	4	4	2
16	20	1000	2000	600	2508	3108	5100	5100	5100	6608	10708	1000	508	4	4	2
18	24	1500	3000	600	3508	4108	5100	5100	5100	7108	10708	1500	508	6	4	2
20	24	1500	3000	600	3508	4108	5380	5380	5380	7388	11268	1500	508	6	4	4
24	30	1500	3000	600	3610	4210	5700	5700	5700	7810	12010	1500	610	8	4	4
26	30	1500	3000	600	3610	4210	5800	5800	5800	7910	12210	1500	610	8	4	4
30	36	1500	3000	600	3610	4210	6000	6000	6000	8110	12610	1500	610	10	4	4
32	36	1500	3000	600	3610	4210	6600	6600	6600	8710	13810	1500	610	10	4	4
36	42	2000	4000	600	4610	5210	6600	6600	6600	9210	13810	2000	610	12	4	4
42	48	2000	4000	600	4610	5210	6600	6600	6600	9210	13810	2000	610	12	4	4
48	56	2000	4000	600	4610	5210	6600	6600	6600	9210	13810	2000	610	16	4	4
48	60	2000	4000	600	4610	5210	6600	6600	6600	9210	13810	2000	610	16	4	4
52	60	2000	4000	600	4710	5310	8000	8000	8000	10710	16710	2000	710	16	4	4
52	64	2000	4000	600	4710	5310	8000	8000	8000	10710	16710	2000	710	16	4	4
56	64	2000	4000	600	4710	5310	8000	8000	8000	10710	16710	2000	710	16	4	4
56	68	2000	4000	600	4710	5310	8000	8000	8000	10710	16710	2000	710	16	4	4



PIG HANDLING SYSTEM

Namdaran Petrogas industries provide custom made pig handling system including crane, trolley and basket for pigging station. This system can handle, load, and unload the pigs without using man-power and minimize the work accidents. Each Pig handling and trolley system is designed and manufactured to meet the requirements of each client. Pig handling system consists of a trolley and a crane; trolley can be either manual, or automatic (which is powered by an electromotor).

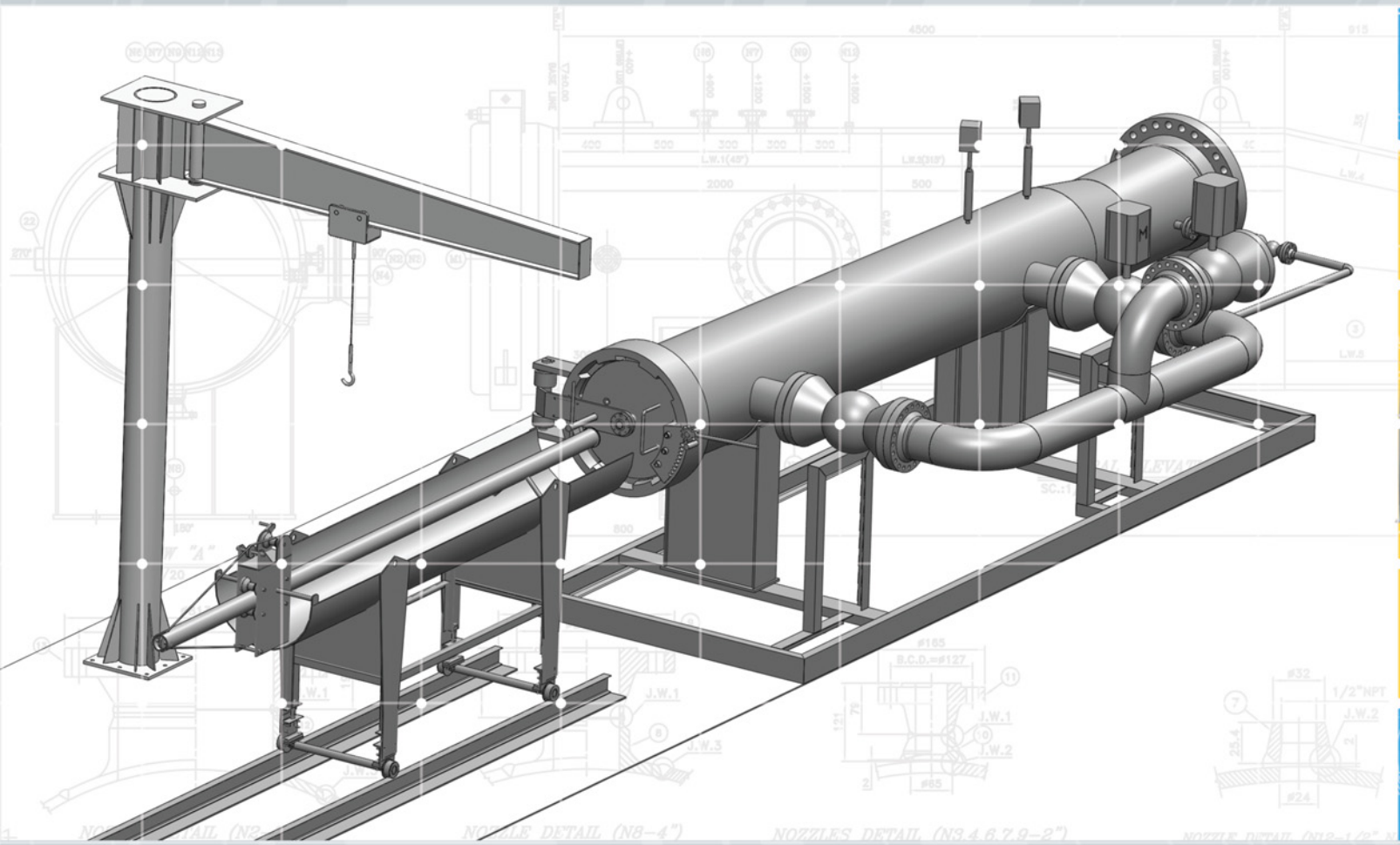

CENTRAL OFFICE

3rd Floor, No. 12, Naghdi St., North Mofateh St., Tehran-Iran
Tel: +98 (21) 88522258-60 Fax: +98 (21) 88753763

SALE OFFICE

Unit 11, 5th Floor, No. 5, 8th St., Khaled Eslamboli St.,
Tehran-Iran Tel: +98 (21) 88710234-5 Fax: +98 (21) 88717457

FACTORY

No. 61, Keyhan Alley, Shams Abad, Km 35 Qom Highway, Tehran-Iran
Tel: +98 (21) 56225112-4 Fax: +98 (21) 56225115

www.namdaran.ir
info@namdaran.ir

Photography, Design & Printing by Moballeghan Co. Fax: (+98-21) 88736088