Section 4. MAPP Gas

INTRODUCTION

Methylacetylene propadiene (MAPP) gas is a versatile, multi-purpose industrial fuel gas that offers excellent performance, safety, and economy. It is used to flame cut, flame weld, braze, solder, pre-heat, and for stress relief. The only equipment usually required to convert from acetylene to MAPP gas are new torch tips. One cylinder of MAPP gas will do the work of five acetylene cylinders.

MAPP GAS IS SAFE

At 70°F MAPP gas can be used safely at full cylinder pressures of 94 psig (pounds-per square inch gauge). Acetylene is limited to 15 psig.

MAPP gas toxicity is rated “very slight”, but high concentrations (500 ppm) can have an anesthetic effect. Local eye or skin contact with MAPP gas vapor has caused no adverse response, but the liquified fuel may cause frost-like burns. MAPP gas is chemically inert to most common materials including steel, brass, most plastic and rubber. There is a slight possibility MAPP gas may react with copper, or alloys of more than 67 percent copper, to produce explosive acetylides when the gas is under high pressure. To be on the safe side, use steel or aluminum fixtures.

DISADVANTAGES

Stabilized MAPP gas requires special tips for oxygen cutting. Sometimes high capacity mixers are required to convert equipment from acetylene to stabilized MAPP gas.

BREAKTHROUGH IN PERFORMANCE

The performance of acetylene had never been equaled until the advent of MAPP gas. It has little or no backfire or flashback, even when the torch tip is placed right up against the work. On aluminum braze welds, MAPP gas will leave no spatter, carbon smutting or large areas of metal flux on the surrounding metal.

MAPP gas is excellent for selective flame-hardening. It bums efficiently at various oxygen-to-fuel ratios and port velocities, and permits a wide range of hardness depths. The stable, clean burning MAPP gas flame virtually eliminates dangerous flashback.

It is ideal for cambering large beams and other heating applications because it heats wider areas to a higher temperature faster than other fuels.

HOW TO SET UP AND USE A WELDING OR CUTTING UNIT

The importance of setting up and using welding and cutting equipment CORRECTLY for all fuel gases cannot be understated since its improper use can be very dangerous. The following steps should be used for a safe operating procedure.

Setting Up:

(1) Be sure cylinders are securely fastened so they will not fall over.

(2) Before attaching oxygen and fuel regulators to cylinders, crack the valve slightly to blow out dirt or dust. Stand away from valve openings.

(3) Be sure regulator inlet connections are clean. Attach regulators to cylinders and tighten connection nuts firmly. Never use oil on oxygen regulators or fittings or wear oily gloves when handling oxygen equipment.

(4) Be sure the regulator adjusting screw is backed all the way out. Crack the oxygen cylinder valve until pressure has built up, then open it all the way. Do not stand in front of or behind a regulator when the oxygen valve is open. Stand to one side.

(5) Be sure the fuel regulator adjusting screw is backed out. If it is, then open the fuel cylinder valve one turn.

SETTTNG UP (Continued)

(6) Connect the correct hoses to the oxygen and MAPP gas regulators. The oxygen hose is green and its fittings have right hand threads. The MAPP gas hose is red and its fittings, notched on the outside, have left hand threads.

(7) Open the torch's oxygen valve and adjust its regulator to the desired pressure. Purge the oxygen for approximately ten seconds for each hundred feet of hose, then turn its torch valve off.

(8) Open the torch's fuel valve and adjust to desired pressure; purge for ten seconds for each hundred feet of hose, then turn it off.

(NOTE: Purging procedures remove any mixture of gases from hoses that could cause a possible backlash.)

Lighting the Torch:

(1) Crack the fuel gas valve about 1/4 turn and crack the oxygen valve slightly. Light the torch with a striker.

(2) Adjust the oxygen and fuel gas in successive steps to the desired flame.

Extinguishing the Torch:

(1) Close the torch fuel valve, then close the torch oxygen valve,

(2) Close both cylinder valves.

(3) Open the torch fuel valve, bleed off the fuel gas, then close it.

(4) Open the torch oxygen valve, bleed off the oxygen, then close it. Release the oxygen last to prevent trapping fuel in the torch.

(5) Back out both regulator adjusting screws.

Use of Welding Tips with MAPP GAS

If you use a standard acetylene tip with MAPP gas and introduce enough oxygen to create what appears to be a neutral flame, it is actually an oxidizing flame. Although unsuitable for welding, this type of flame is recommended for most brazing operations. For brazing, the performance and consumption of MAPP gas has been determined to be generally equivalent to that of acetylene. MAPP gas has a slower flame propagation rate, so, to accommodate the same amount of fuel it is necessary to increase tip size by about one number.

A tip that overcomes the oxidizing effects of flames adjusted to the neutral position has been perfected. It consists of a flame curtain around the primary flame cone to protect it from atmospheric gases. This tip design is shown in Figure 4-1.

A tip that works well with MAPP gas is one or two sizes larger than a tip designed for acetylene (Table 4-1).

Counterboring is required for jobs that need a harsh yet stable flame. Table 4-2 lists the counterbore drill number for each tip drill size. In every case the depth of counterbore is 1/16 in.

The counterboring schedule (Table 4-2) is for use with welding tips only. Because of different flame requirements, different counterboring schedules are used for flame hardening heads and other equipment.

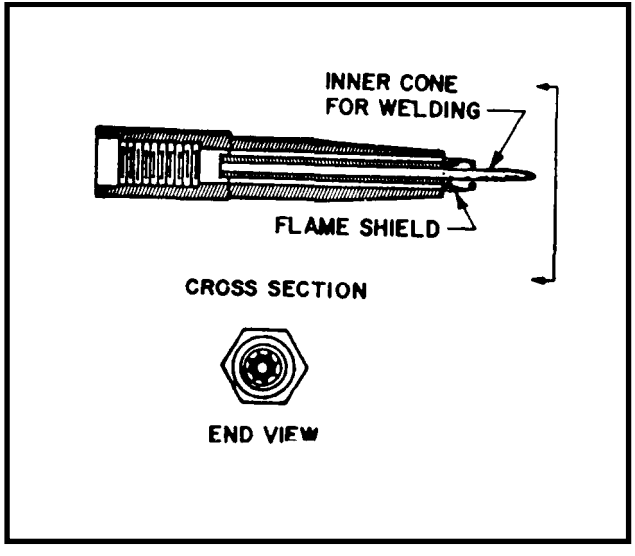

FIGURE 4-1. MAPP Gas Torch Tip Design

FUSION WELDING

Flame Adjustment

A MAPP gas flame, with its characteristically longer inner cone, differs in appearance from an oxygen flame, so welders must accustom themselves to adjust the MAPP gas flame correctly. Although standard acetylene welding equipment is used to make a MAPP gas flame, a slightly larger tip is still required because of a greater gas density and a slower flame propagation rate. For welding steel, a triple deoxidized rod analyzed at 0.06-0.12 C, 1.75-2.10 Mn, 0.50-0.80 Si, 0.025 max P, and 0.4-0.6 Mo is best.

Most MAPP gas welding requires a neutral flame. Laboratory studies have shown neutral flames have a fuel-to-oxygen ratio of 1:2.3. Investigations of 1/4 in.-thick mild steel plate butt welds have shown that flame adjustment has a great effect on weld strength. Neutral flame welds had an average tensile strength of 66,000 psig, while oxidizing flame welds were as low as 35,000 psig. Welds made with a reducing flame averaged 52,000 psig.

TABLE 4-1. Welding Tip Size and Application Using MAPP Gas

Drill Size of Tip	Inner Flame Length (Inches)	Regulator Pressure Range*		MAPP Gas Consumption (cfh)	Metal Thickness (Inches)
		MAPP Gas	Oxygen		
72-70	1/4	1-2	5-6	1-3	UP TO 1/32
65-60	7/16	1-3	5-6	2-4	1/32-1/16
56-54	5/8	1-5	6-8	3-8	1/16-1/8
49-48	1	2-8	8-10	5-18	1/8-3/16
43-40	1 1/8	3-9	10-12	6-30	3/16-1/4
36	1 1/4	5-1o	12-15	6-35	1/4-3/8

* For injector type equipment use 1-2 psig (pounds per square inch gauge) MAPP Gas and 25-30 psig oxygen for all size tips.

Carbon Steel Welding

Carbon steel welding is done in a fixed horizontal position. Edges are prepared by machining, grinding, or flame cutting. Remove all oxidized metal with a grinder before any flame cutting welding is done. All slag, scale, rust, paint and other foreign material 1 in. from both edges, top and bottom, must be removed before welding.

The bevel must be 40 degrees on each part or 80 degrees included angle minimum. It should have a sharp edge; no land is allowed. Tack the joint at four equally spaced points with a minimum of 1/8 in. spacing. The tacks must be filed or ground to remove all oxides and tapered out to each edge of the tack. Use calibrated flow meters to keep the ratio of MAPP gas to oxygen at 1:2.7. This gas flow ratio is very critical and must be maintained. The flame will appear oxidizing.

THE PROPER WELDING TIP IS ONE SIZE LARGER THAN THAT NORMALLY USED FOR OXY-ACETYLENE WELDING.

Use the forehand method, which requires the welding to be done uphill. Hold the end of the inner cone about 1/4 - 1/8 in. from the molten puddle at an angle of 20-250 from a perpendicular line to the welding surface. Protect the molten puddle from any drafts. Apply filler metal by melting the end of the rod into the molten puddle (dip method). If a weld requires more than one pass, file or grind the preceding pass to remove all oxides. It is important that 100 percent penetration be achieved. No under cuts are permitted in the base metal at the edge of the weld. Deposit the weld metal so that it has a 1/16 - 1/8 in. reinforcement and gradually increases from the center to the edge of the weld.

Remove all oxides, scale, paint, grease, and other foreign materials before welding starts and between passes. Remove all cracks, pinholes, cold laps, and oxidized areas with a grinder before making the next pass. Preheat and/or stress relieving procedures are unnecessary except when the National Welding Code requires them.

TABLE 4-2. Welding Tip Counterbore Schedule

Tip Drill Size	Counterbore Drill	Tip Drill Size	Counterbore Drill
76	52	52	36
74	51	50	34
72	50	48	33
70	49	46	32
68	48	44	31
66	47	42	30
64	46	40	29
62	45	38	28
60	44	36	27
58	43	34	26
56	42	32	25
54	39	30	24

Carbon Steel Pipe Welding

Pipe welding studies comparing MAPP gas and acetylene show that they allow comparable welding speeds on pipe 2 in. or less in diameter. Oxy-acetylene welding is somewhat faster on larger pipe.

Cast Iron Welding

MAPP gas readily welds cast iron. Use a neutral flame with a welding tip that produces a bulbous pattern.

Aluminum Welding

Welding aluminum with MAPP gas requires a flame adjusted to slightly reducing. A welding tip that produces a long pointed flame is best. Use the standard procedures of precleaning, fluxing and preheating.

Copper Welding

Weld copper with an oxidizing flame. A rod meeting AWS Specification P Cu (phosphorous deoxidized copper) offers best results.

BRAZING

A MAPP gas flame, with its deep-soaking heat characteristic, is ideal for many brazing operations. When brazing with MAPP gas, use a tip approximately one size larger than that required for acetylene to produce an oxidizing flame. Heavy braze sections usually require a tip that produces a bulbous flame. Fluxing procedures and filler rod composition are standard.

METALLIZING

MAPP gas can be used in most common metallizing equipment to spray any material that can be sprayed using any other fuel gas. The conversion to MAPP gas can be accomplished with only minor equipment modification. It is also very suitable for applications such as preheating work pieces and fusion of powder deposits.

FLAME HARDENING

Flame hardening is a rapid, economical method for selectively hardening specific areas on the surface of a part. The process is applied only to flame-hardenable materials, principally carbon and alloy steels, certain stainless steels, and cast irons. Flame hardening is used to harden parts to depths of 1/64 -1/4 in.

How Flame Hardening Works

Flame hardening is any process that uses an oxy-fuel gas flame to heat carbon or alloy steel, tool steel, cast iron, or hardenable stainless steels above a certain "critical" temperature, followed by a rapid quenching. This causes the heated material to harden to some depth below its surface.

Carbon Content and Hardness

Flame hardening seldom requires tempering because the hardening effect is shallow. Tempering also tends to reduce maximum hardness to some degree. However, insufficient heating (not up to the critical temperature, or not long enough above it), will produce a very low hardness on the workpiece surface. Most parts can be reheated after cooling to correct this problem.

Too much heat can cause low surface hardness by burning carbon out of the surface (decarburization). The workpiece will have a high carbon steel core and a soft, low-carbon iron skin. Decarburized workplaces usually cannot be reheated without cracking.

Quenching

Cooling speed during quenching depends on the type and temperature of quenching medium used, and how fast it is agitated. Self-quenching, when a part has a sufficiently large, cool mass to draw heat away from the surface causing it to quench itself, is the slowest method and produces the lowest surface hardness.

Forced air is a mild quenchant that rapidly cools a workpiece with minimal risk of surface cracking, especially in higher-carbon steels. Oil and soluble-oil mixtures give relatively high hardness without too

Quenching (Continued)

severe a cooling rate. Water is a severe quenchant, and brine is even more so. They produce high hardness but must be used carefully to prevent surface cracking. Water gives a higher hardness than oil and can be used where surface cracking is not likely to be a problem (as it is in very high-carbon steels). Most flame hardening is done with water-cooled or water-quenching flame heads because of the extreme heat reflected from the workpiece.

Flame Hardenable Materials

Plain carbon steels for flame hardening should have at least 0.30 percent carbon. Lower carbon-steel grades can be hardened if they have first been carburized.

Cast iron can be flame hardened if it has a combined-carbon content of 0.35 percent -0.80 percent. It responds much the same way as steel of equivalent total carbon content. However, cast iron also has a lower melting point than most steels, so care must be exercised to prevent surface melting during flame hardening.

Flame Head Design

Flame head design is another important consideration in successful flame hardening. MAPP gas flame heads differ from flame heads used for other fuel gases. MAPP gas flame heads usually have No. 69 drill-size flame ports counterbored 1/16 in. deep with No. 56 drills. The rows and ports are on 1/8 in. centers and the rows are offset 1/1 6 in. Acetylene flame heads usually have No. 56 drill-size flame ports with the ports and rows on 1/4 in. centers; the ports are offset 1/8 inch, row to row.

HOW TO FLAME CUT WITH MAPP GAS

Quality cuts are readily obtained with MAPP gas. But quality cuts require a proper balance between preheat flame adjustment, oxygen pressure, coupling distance, torch angle, travel speed, plate quality, and tip size. Fortunately, this balance is easy to achieve with the following simple operating procedures:

Preheat Flame Adjustment

MAPP gas is similar to acetylene and other fuel gases because it can be made to produce a carburizing, neutral, or oxidizing flame (Table 4-3). Flame cutting will most likely require adjustment to a neutral flame.

To adjust to a slightly carburizing flame, light the torch, then slowly increase preheat oxygen until the yellow flame turns blue with some yellow feathers remaining on the end of the pre-heat cones. To adjust to a neutral flame, twist the oxygen valve slightly until the feathers disappear and the preheat cones become sharply defined and turn a dark blue color. This flame will remain neutral, even with the addition of a small amount of preheat oxygen. To adjust to an oxidizing flame simply give the oxygen valve a further slight twist. The neutral flame will suddenly change color, from dark blue to a lighter blue, and the preheat cones will shorten. An increase in sound will also be noted (Figure 4-2).

Different fuel gases will produce different flames from the same tip. MAPP gas preheat flame cones will be at least one and one-half times longer than acetylene

TABLE 4-3. Oxy-Fuel Ratios/ Flame Condition Comparisons

Flame	Oxy-MAPP Gas Ratio
VERY CARBURIZING	2.0 TO 1
SLIGHTLY CARBURIZING	2.3 TO 1
NEUTRAL	2.5 TO 1
OXIDIZING	3.0 TO 1
VERY OXIDIZING	3.5 TO 1

Preheat Flame Adjustment (Continued)

preheat cones. Operators accustomed to acetylene and given a one-piece MAPP gas tip tend to adjust the flame as if they were using acetylene and may think the gas is too cold. In fact, such a setting with MAPP gas will not have sufficient fuel volume to produce enough heat for the job at hand.

Neutral flame adjustments are used for most cutting. Carburizing and oxidizing flames are used in special applications.

Use a “slightly carburizing” flame to stack cut light material because slag formation is minimal. If a strongly oxidizing flame is used, slag produced in the kerf may be enough to weld the plates together and slag-welded plates often cannot be separated after the cut is completed.

For cutting or piercing, use a “moderately oxidizing” flame for fast starts because it produces a slightly hotter flame temperature, and higher burning velocity than a neutral flame. An oxidizing flame is commonly used with a “high-low” device. Use a large “high” oxidizing flame to obtain a fast start. As soon as the cut is started, drop to the “low” position and continue the cut with the neutral flame.

An “oxidizing flame” may be used for beveling. When the tip is at an angle to the surface it is not using all of its preheat flames to make the bevel cut, therefore, an oxidizing flame is used to get maximum heat from the small portion of the preheat flame actually heating the critical area.

Do not use “very oxidizing” flames for fast starts. An overly oxidizing flame actually increases starting time. The extra oxygen flow does not contribute to combustion, but instead cools the flame and oxidizes the steel surface.

Oxygen Pressure

The term flame-cutting oxygen pressure always refers to the pressure at the torch, not at some remotely located regulator. Reasons for this are discussed in detail in the Oxygen Supply paragraph on page 4-23.

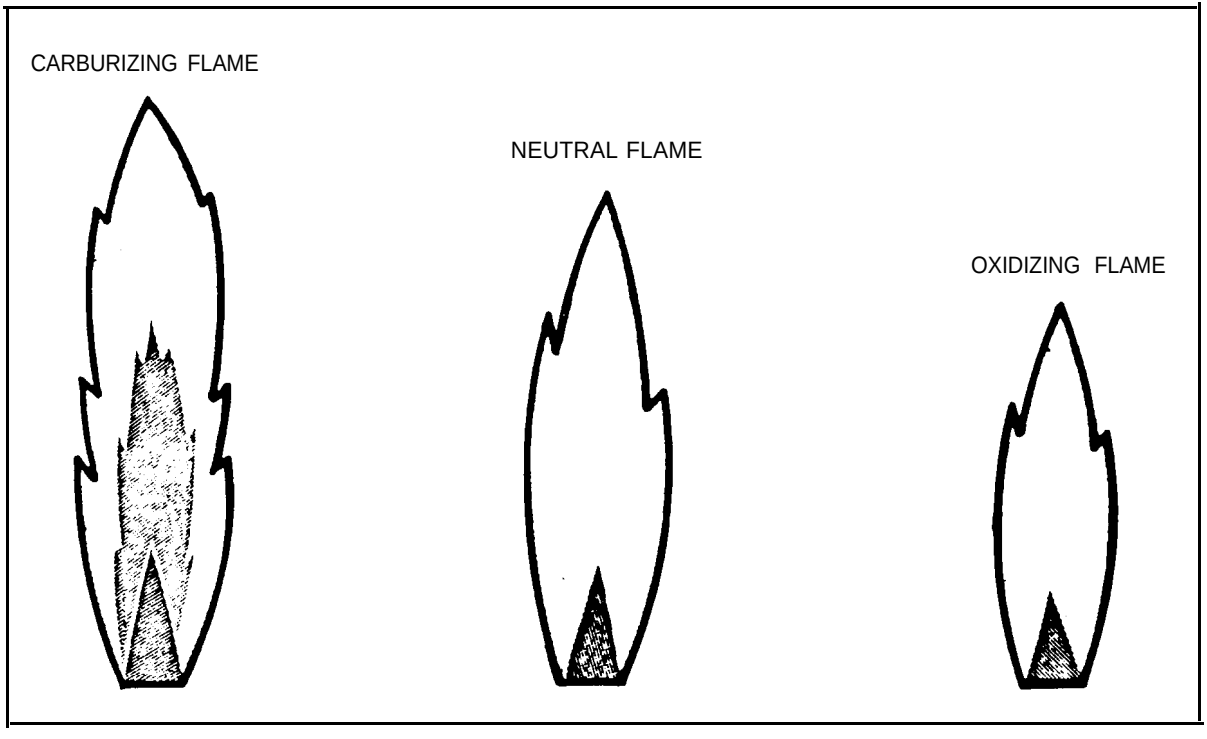

FIGURE 4-2. Preheat Flame Characteristics

Preheat Flame Adjustment (Continued)

A simple test will quickly show the best oxygen pressure to use for any given tip.

Put a low volume, soft flame on the tip, then turn the cutting oxygen on and vary the pressure to find the best looking stinger (visible oxygen cutting strewn). Low pressure gives a very short stinger, maybe two to three inches long, that breaks up at the end. Increase pressure to define and lengthen the stinger. This is the correct cutting oxygen pressure for a given tip. The long stinger will remain over a fairly wide pressure range, but as oxygen pressure is increased, the stinger returns to the short, broken form it had under low pressure. If too much oxygen pressure is used, concavity may show on the cut surface.

Too much oxygen pressure notches the cut surface because the high velocity oxygen is blowing the metal and slag out of the kerf so fast that the cut is continuously being started. If the pressure is too low, the operation will slow down too much. Excessive drag and slag dormation result, and a wide kerf maybe found at the bottom of the cut.

Cutting-oxygen pressure and travel speed affect the tendency of slag to stick to the bottom of a cut. This tendency increases as the amount of metallic iron in the slag increases.

Two things can cause high iron content in slag. Too much cutting-oxygen pressure - Oxygen forced through the kerf so fast that it blows out molten iron before it can be oxidized. Cutting speed too fast - Not enough time to thoroughly oxidize the molten iron, with the same result as high oxygen pressure.

Coupling Distance

The distance between the end of the flame cones and the workpiece is the coupling distance. Some consider the distance between tip and workpiece to be the coupling distance, however, since flame lengths vary with different fuels and flame adjustments, the distance between the end of the preheat cones and the workpiece is the preferred measure (Figure 4-3).

Coupling Distance (Continued)

Keep preheat cones about 1/16 - 1/8 in. off the surface of the work when using MAPP gas to cut ordinary plate thicknesses of 2-3 inches. Let the preheat cones impinge on the surface for faster preheating for piercing, or very fast starts. Above 6 in. plate thickness, increase the coupling distance to get more heat from the secondary flame cone as the secondary MAPP gas flame preheats thick plates far ahead of a cut. For material 12 in. thick or more, use a coupling distance of 3/4 to 1-1/4 in. long.

Torch Angle

The torch angle, or lead angle is the acute angle between the axis of the torch and the workpiece surface when the torch is pointed in the direction of the cut (Figure 4-4). When cutting light-gauge steel (up to 1/4 in. thick) a 40-50 degree torch angle allows much faster cutting speeds than a torch mounted perpendicular to the plate. Speed can be increased on plate up to 1/2 in. thick by increasing the torch lead angle to 60-70 degrees. When cutting plate over 1/2 in. thick, acute lead angles offer no advantage and should be cut with the torch perpendicular to the workpiece surface.

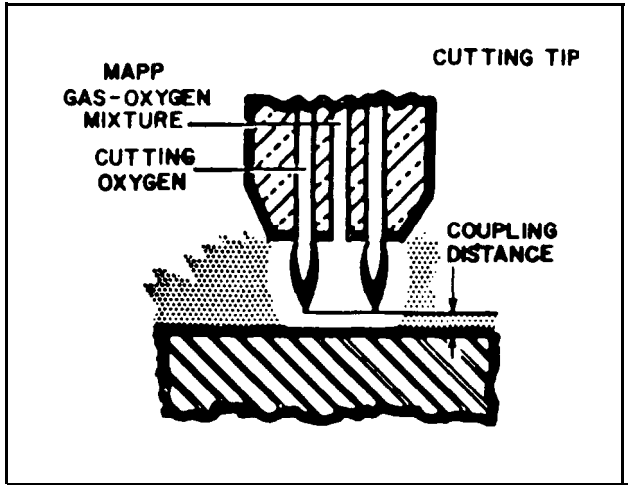

FIGURE 4-3. Correct Measurement of Coupling Distance

Torch Angle (Continued)

An angled torch cuts faster on thinner-gauge material. The intersection of the kerf and the surface presents a knife edge which is easily ignited. Once the plate is burning, the cut is readily carried through to the other side of the work. This avoids problems of non-drop cuts, incomplete cutting on the opposite side of the thicker plate, gouging cuts in the center of the kerf and similar problems.

Travel Speed

Each job has a best cutting speed. A high quality cut will be obtained on plate up to about 2 in. thick when there is a steady "purring" sound from the torch and the spark stream under the plate has a 15 degree lead angle; the angle made by the sparks coming from the bottom of the cut in the same direction the torch is traveling. If the sparks go straight down, or even backwards, travel speed is too high.

Nature of the Workpiece

Variations in cut quality are the result of different workpiece surface conditions or plate compositions. For example, rusty or oily plates require more preheat, or slower travel speeds than clean plates. Most variations from the ideal condition of a clean, flat, low-carbon steel plate tend to slow down cutting action.

For a very rusty plate, set as big a preheat flame as possible on the torch and run it back and forth over the line to be cut. Extra preheat passes do two things. First, they span off much of the scale that interferes with the cutting action, and they put extra preheat into the plate to allow improved cut quality and speed.

Cut a little bit slower when working with high-strength low-alloy plates (ASTM A-242 steel), or full alloy plates (ASTM A-5 14). Also, because these steels are more sensitive to notching than ordinary carbon steels, use low oxygen pressure.

Clad carbon alloy, carbon stainless, or low-carbon--high-carbon plates require a lower oxygen pressure, and perhaps a lower travel speed than straight low-carbon steel. Be sure the low-carbon steel side is

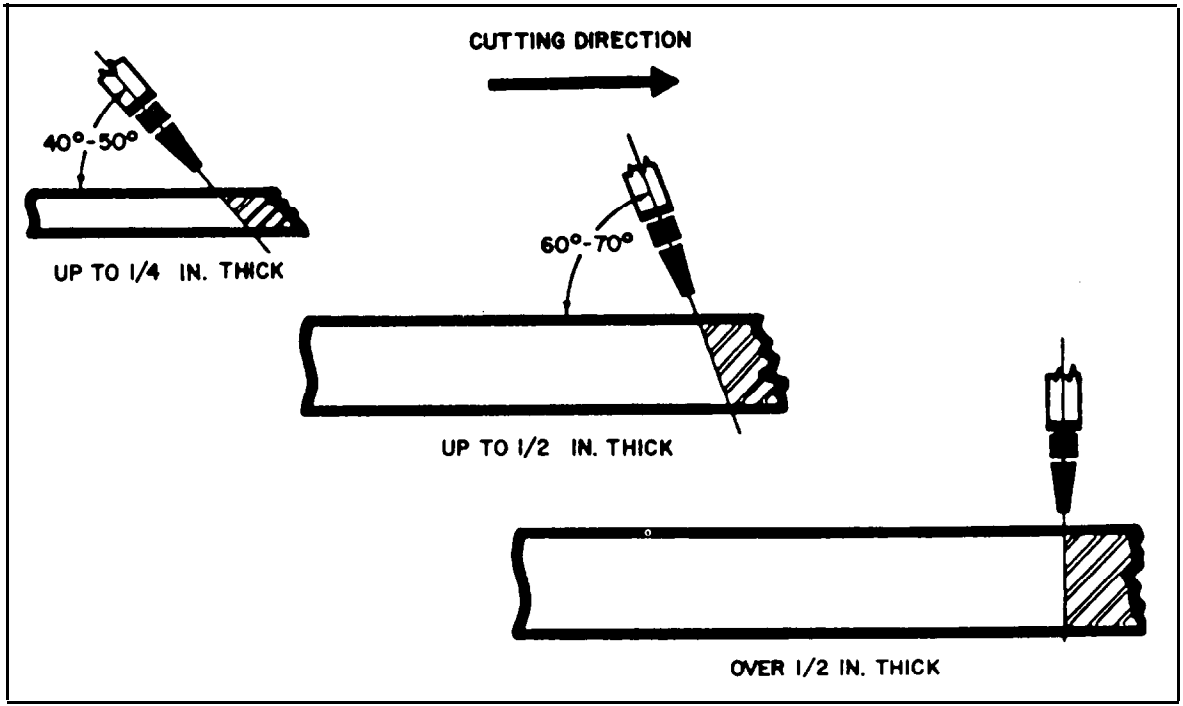

FIGURE 4-4. Corrrect Torch Angles

Nature of the Workpiece (Continued,

on the same side as the torch. The alloyed or higher carbon cladding does not bum as readily as the carbon steel.

By putting the cladding on the bottom, and the carbon steel on the top, a cutting action similar to powder cutting results. The low-carbon steel on top bums readily and forms slag. As the iron-bearing slag passes through the high-carbon or high-alloy cladding, it dilutes the cladding material. The torch, in essence, still bums a lower carbon steel. If the clad or high-carbon steel is on the top surface, the torch is required to cut material that is not readily oxidizable, and forms refractory slags that can stop the cutting action.

Tip Size and Style

All steel sections have corresponding tip sizes to allow the most economical operation for a particular fuel. Any fuel will burn in any tip, of course, but not as efficiently and may even overheat enough to melt the tip or cause problems in the cut.

For example, MAPP gas does not operate at peak efficiency in most acetylene tips because the preheat orifices are too small. If MAPP gas is used with a natural-gas tip, the tip will overheat and become susceptible to flashback. In an emergency, a natural-gas tip can be used with MAPP gas by removing its skirt. Similarly, an acetylene tip can be used if inefficient burning can be tolerated for a short run.

Oxygen Supply

Oxygen supply means two things - volume and pressure. Both are needed to obtain a decent stinger to provide a good quality cut. If all the oxygen volume in the world is available, and the pressure is low, the oxygen system will be deficient. Also, very high oxygen pressures will not help when only a small volume of oxygen is available over a given time.

It is as important to have a generous supply of oxygen as it is to have well-trained burners, good equipment, and a quality fuel gas. Insufficient oxygen usually

results from undersized piping coming into a plant, or regulators that do not have sufficient capacity for making heavy cuts. Deficient cutting oxygen supplies often result from very long hoses, hoses too narrow in diameter, or hoses that have been chopped up and patched together with couplings.

When depressing the oxygen lever results in a large pressure drop, something is wrong. This pressure drop is most readily seen in two-hose torches because insufficient oxygen causes the preheat flame to become very carburizing when the cutting oxygen valve is opened. Check the regulator and the oxygen piping system immediately.

Cutting oxygen is usually at least 99.7 percent pure. When lower purity oxygen gets into the lines, it is just about impossible to make a decent cut at respectable speeds. Impure oxygen is often the last thing one suspects, and is often not discovered until a cylinder change - and suddenly everything starts working the way it should.

Starting a Cut

Cuts can be started at an edge or any other point on the surface of a plate.

There are several ways to start an edge cut, but the most common procedure is to position the tip (either by hand or by machine) so that the preheat flames heat the top comer of the plate while the cutting oxygen hole is centered over the comer. When the plate becomes bright cherry-red, turn on the cutting oxygen and start torch travel.

Another edge-starting technique is preheating the plate. Move the torch slowly back and forth along the line of cut several times for a distance equal to the plate thickness. Pull the torch slightly away from the edge, turn on the cutting oxygen and begin torch travel. A cut started with this technique allows normal cutting speeds the moment the torch reaches the plate edge.

Piercing is used to start cuts at some point away from an edge when the shape or location precludes an edge start.

When hand piercing for a start, the flames should impinge on the plate surface while the torch is moved with small circular motions over the area to be pierced. When a hot spot is formed, the cutting oxygen is turned on slowly while the torch is raised simultaneously, and travel is started along the line of cut .

A hole can be pierced in very thin plate without moving the torch, however, it is very important to raise the torch on thicker plate as travel begins. If this is not done, slag will blow out and hit the torch tip, either getting it dirty or burning it. Travel should never be directly away from the operator because slag and sparks will emerge in a direction opposite the line of cut and may cause bums.

Another hand piercing method is to make a hot spot, then rotate the torch so the tip is angled away from the direction of travel. Start the cutting oxygen, rotate the torch until the tip is perpendicular to the plate, then lift the torch and keep it moving along the line of cut.

Machine piercing starts are essentially the same as hand piercing starts. Some machines are equipped with torch lifters so that torches can be moved up as the pierce is started. Other machines have “Hi-Lo” devices with a heavy preheat flame for making a hot spot without getting the tip too close to the plate surface. Some machines also have an oxygen ease-on valve so that cutting oxygen will build up to full volume slowly. Cutting oxygen and travel should always be started simultaneously. Always protect the cutting tip from blown slag.

SPECIAL CUTTING JOBS

Gouging

Gouging applications include removing tack welds, defective welds, blowholes or sand inclusions in castings, welds in temporary brackets or supports, flanges from piping and heads, and old tubes from boilers. Gouging is also used in demolition work and to prepare plate edges for welding.

Gouging (Continued)

Manual gouging is a rapid metal removal method. Speeds from 12-84 ipm (inches per minute) are possible; 24 ipm across 1/4 in. plate will make a gouge 3/8 in. wide. Gouging accuracy can be controlled to width and depth tolerances of about 1/16 in., depending on the skill of the operator.

Piercing and Washing

Piercing is used to cut holes in a workpiece. An important example is rivet piercing. Rivets and similar fasteners can be removed entirely from a workpiece by burning them out. It is possible to do this without damaging the holes in the plates through which the rivets pass.

Flame piercing is used when the rivet shank cannot be removed because of poor alignment of the original holes in the mating plates. After piercing, use the oxygen stream to wash away the remaining rivet material. This method requires a high degree of skill and great care must be exercised.

Alternatively, use the cutting flame to wash a rivet head away. This leaves the rivet shank accessible to a punch and washed plates undamaged and unmarked. Merely punch the shank of the rivet out and the diameter of the hole in the plate remains unchanged. The rivet washing process has wide application when plates and rivet holes are to be reused.

Cutting Manganese Steel

Very high quality cut surfaces can be produced when MAPP gas is used to cut Hadfield's manganese (Mn) steel (approximately 13 percent manganese). With two important exceptions, cutting manganese steel is similar to cutting mild carbon steels. One, a preheat is required, and two, cutting oxygen pressure should be kept as& as possible. Without a preheat, and with too much oxygen pressure, a very rough, notched surface will result.

CAUTION: The preheat should be applied only along the line of cut since heating can destroy desirable

properties of this material. Do not preheat the entire piece since Hadfield's manganese steel becomes embrittled if heated above 500°F.

Preheating for hand cutting can be accomplished by using the torch to heat several inches ahead of the cut and then dropping back to make the cut. Preheating can also be performed with another torch.

For machine cutting, pre-heating is best accomplished by positioning the preheat torch about 3 in. ahead of the cutting tip. Use a cutting tip about the same size as the heating tip or use the MAPP H-O heating tip.

Select cutting tip size the same as when selecting tips for mild carbon steel. MAPP FS tips provide the best preheat pattern. Use only standard pressure tips since cutting oxygen pressure should be from 30-40 psig (pounds per square inch gauge).

Table 4-4 gives a few examples of the conditions used to obtain very high quality, slag free cuts with Hadfield's manganese steel.

TABLE 4-4. Hadfield's Manganese Steel Cutting Conditions

Metal Thickness (inches)	Preheat Tip	cutting Tip	cutting Speed (ipm)
7/16	FS-56	FS-61	30-32
3/4	FS-56	FS-54	23
3/4	H-O	FS-54	25
	Pressure (PSIG)		
	MAPP Gas	Oxygen	
7/16	7	30-40	
3/4	7	30-40	
3/4	7	30-40	

OPERATION PROCEDURES - BULK-SYSTEMS

Start Up Procedure

Slowly open the globe valve located downstream from the regulator. This valve is opened slowly to prevent closing the excess flow valve in the tank. Turn on, electric power to the vaporizer.

Temporary Shutdown Procedure

Close the globe valve located downstream from the regulator.

Extended Shutdown Procedure

Close the globe valve located downstream from the regulator. Turn off electric power to vaporizer.

CAUTION: Only authorized trained personnel are to adjust the line pressure regulator and the pressure-temperature controls within the vaporizer.

THE USE OF ANTIFREEZE IN FLASH-BACK ARRESTORS

There are some important points which should be emphasized with regard to the use of antifreeze in flashback arrestors. Use antifreeze with no water for all interior flashback arrestors. For flashback arrestors installed outdoors, use a solution of 90 percent single phase glycol-based antifreeze and 10 percent water. This will prevent freezing down to a temperature of -27°F.

The percentage of water in antifreeze should be kept to a minimum because water vapor is harmful to MAPP gas pipe lines (rust) and to MAPP gas flames (lower flame temperature).

A good grade, one phase glycol-based antifreeze should be used. The two phase (oil added) anti-freeze, such as Prestone, should not be used. Some single phase antifreezes are listed below:

(1) Weatherset Antifreeze& Summer Coolant

THE USE OF ANTIFREEZE (Continued)

(2) Sentinel Antifreeze Coolant

(3) Factory replacement material

Ford	-Fomoco or Rodunda
Chrysler	-Mopar
American	-Rambler
General Motors-G.M.	-1899M

(4) Major Oil Company Products

Standard
Shell
Pure
Mobile
Other products not containing oil inhibitors

Antifreeze levels should be checked periodically, (three to six months) and changed as needed. Inspectors should check flash-back arrestors to look for signs of glycol foaming or frothing, the frost indication that antifreeze should be changed. Drain and refill antifreeze at regular intervals (two or three months) in large usage areas to prevent foam from getting into the pipeline or equipment.

MAPP GAS AND COMPRESSED AIR BURNER

This burner, simple in design, is effective for bending rails, beams, and other steel.

Take a 4 in. pipe cap, thread a 1/2 in. pipe to its center, then (for aspirated air), drill 10 equally spaced 1/4 in. holes on a 2-7/8 in. diameter circle and 10 equally spaced 1/4 in. holes on a 3-3/4 in. diameter circle (Figure 4-5). Attach it to a burning skirt of 9 in. long, 4 in. diameter, Sch. 80 pipe. Make a No. 28 drill hole in the 1/2 in. pipe's cap for MAPP gas and compressed air. This set up should have a Y-connection with needle valves and reverse-flow checks for MAPP gas and oxygen.

Operating pressures: approximately 20 psig MAPP gas and 20 psig compressed air, Consumption: approximately 100 cfh MAPP gas with the burner adjusted to a high velocity roaring sound. An oxidizing flame should extend a short distance beyond the end of the burner.

By modifying this basic design, different size burners can be made for use with MAPP gas.

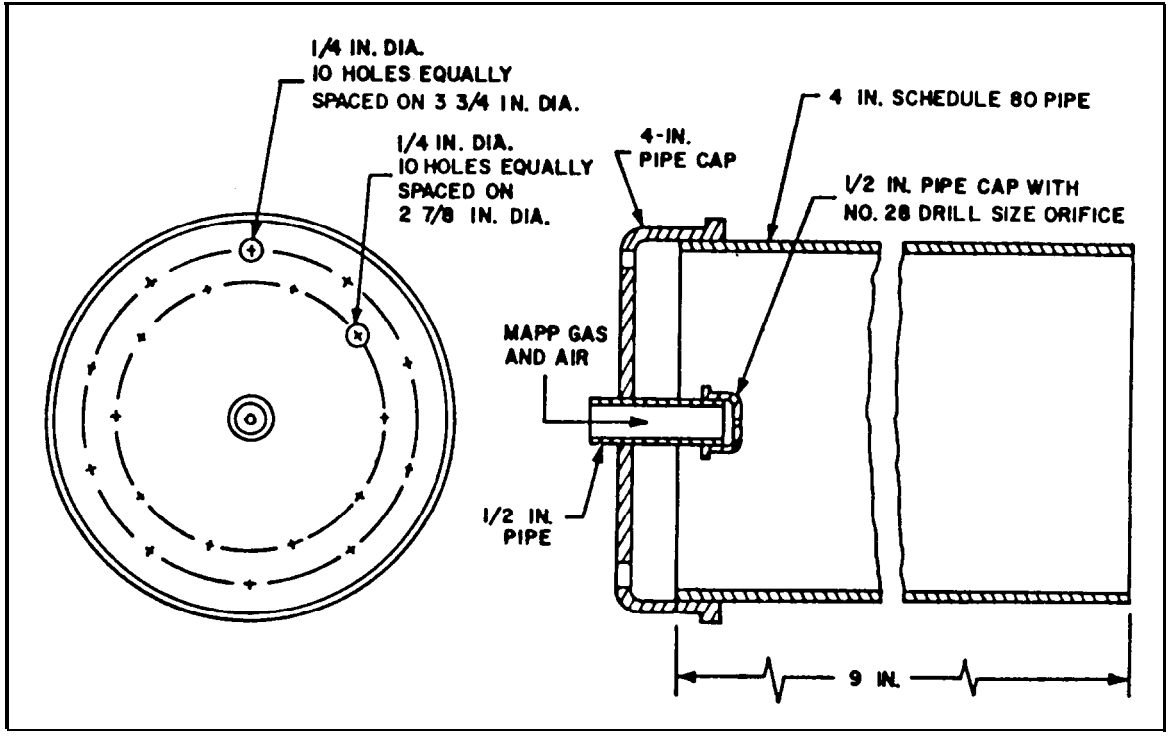

FIGURE 4-5. MAPP Gas and Compressed Air Burner