Section 2. WEARFACING

INTRODUCTION

Abrasion-resistant alloys have poor impact properties. Conversely, impact-resistant alloys have poor abrasion resist ante. The higher an alloy's abrasion resistance, the lower its ability to withstand impact, and vice-versa. Between these two extremes are numerous wearfacing alloys that combine varying degrees of resistance to abrasion with the ability to absorb a fair amount of impact. The selection of a wearfacing alloy for a certain application is determined by the requirements of its anticipated service.

The Seabee Welder can greatly extend the usable life of construction equipment by selecting the appropriate alloy and applying it with the correct procedure. A regular wearfacing program extends equipment life, allows it to operate more efficiently, with less down time, and greatly reduces the need for spare parts.

The following section illustrates various parts of construction equipment and describes the correct repair welding procedures to use on them. Each diagram provides one or more electrodes that maybe used as alternates whenever the most desirable rod is not available. The numeral given is the page number where information on the recommended rod can be found.

WORKPIECE PREPARATION

Remove dirt, oil, rust, grease and other contaminants before welding. If you do not, you are inviting porosity and possible spalling. Prepare a sound foundation by removing fatigued, rolled-over metal. Repair cracks with compatible electrodes.

PREHEAT

Preheating of base metal is sometimes necessary to minimize distortion, to prevent spalling or cracking or to avoid thermal shock. Preheat temperature is influenced by two important factors; the carbon content and alloy content of the base metal. The higher the carbon content, the higher the required preheat temperature. The same is true, to a slightly lesser degree, for the total content of other alloys. After the surface has been brought to the required

PREHEAT (Continued)

preheat temperature, the part must be held at this temperature until heat has reached the core; this is commonly referred to as soaking time. All preheated parts should be slow-cooled.

The need for preheating increases as the following factors are changed:

1. The larger the mass being welded.
2. The lower the temperature of the pieces being welded.
3. The lower the atmospheric temperature.
4. The smaller the weld rod diameter.
5. The greater the speed of welding.
6. The higher the carbon content of the steel.
7. The higher the manganese content in plain carbon or low alloy steels. This does not apply to Hadfield's manganese steel.
8. The greater the alloy content in air-hardening steels.
9. The more the air-hardening capacity of the steel.
10. The more complicated the shape or section of the parts.

Base metal composition must be determined for accurate Preheat requirements. Carbon steels and austenitic manganese steels can be differentiated with the use of a magnet. Carbon steels are magnetic; austenitic manganese steels are not. (Austenitic manganese steel will become magnetic after being workhardened so a magnetic check should be made in a non-worked area.) Cast iron can be determined by a spark when a metal-working chisel is applied to the base metal; cast iron will chip or crack off; cast steel will shave.

PREHEAT (Continued)

Table 2-1 shows recommended preheat temperatures for welding. Temperatures higher than those indicated on this chart are sometimes required when hard-facing, depending on the size and shape of the part and the type of hard-facing alloy to be applied.

WELDING ON CAST IRON

Rebuilding and hard-facing of cast iron is not generally recommended since it is extremely crack sensitive. However, some cast iron parts, primarily those subject to straight abrasion, are being successfully hard-faced. Under any circumstances, cast iron parts require high preheat temperatures, from 1000- 1200°F (dull red), and must be slow cooled after welding. Weld deposits on cast iron should be peened to help relieve stresses.

BUILDUP MATERIALS AND BASE METALS

Considerable differences exist between welding materials used to buildup worn equipment and those used for hard-facing overlays.

Prior to hard-facing, badly worn parts must be restored with an appropriate buildup material to within 2/16 - 3/8 in. of their finished size. The buildup material must have sufficient mechanical strength to sustain structural requirements. It must resist cold flowing, mushing under high compressive loads and plastic deformation under heavy impact. If the buildup material doesn't possess these properties, a hard-facing overlay, which has comparatively little ductility, will span for lack of support. In addition to these mechanical requirements, a buildup material must be compatible with the base metal and the hard-facing overlay.

Use electrode on page 1-24 as the primary source and electrodes on pages 1-5 and 1-3, in that order, as alternate sources to rebuild carbon steel parts prior to overlaying with hard-facing electrodes. When hard-facing with the high alloy group, apply the recommended hard-facing material before placing it in service and do not allow it to wear more than 1/4 in. (two layers) before hard-facing. If carbon steel parts

BUILDUP MATERIALS AND BASE METALS (Continued)

that are to be hard-faced with the high alloy group require buildup, it is vital that high interpass temperatures are maintained while observing the following procedures as illustrated in Figure 2-1. Use weaving bead instead of stringer bead when applying hard-facing. Limit single pass bead thickness to 3/16 inch. Use same technique for second layer. Avoid severe quench.

To rebuild austenitic manganese steel parts, use the electrode on page 1-29 as the primary source and the electrode on page 1-27 as the secondary source.

WORKPIECE POSITIONING

You will get the job done quicker and more economically if the part being hard-faced is positioned for downhand welding. When down-hand welding is not practical, select an electrode recommended for all-position welding.

THICKNESS OF HARD-FACING DEPOSITS

A deposit of a hard-facing alloy that is too thick can give you more problems than no deposit at all. In most cases, hard-facing materials should be limited to two layers; the first layer will produce an admixture with the base metal and the second layer will produce the desired wear-resistant surface.

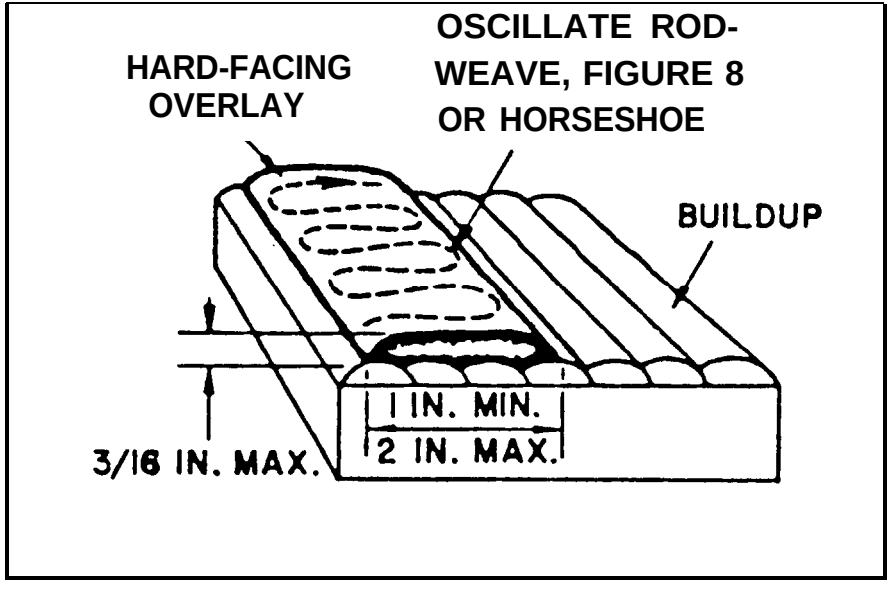

FIGURE 2-1. Hard-Facing Techniques

TABLE 2-1. Metals Preheating Chart

Metal Group	Metal Designation	Recommended Preheat
PLAIN CARBON STEELS	Plain Carbon Steel - Below .20%C	Up to 200°F
	Plain Carbon Steel - .20-.30%C	200°F-300°F
	Plain Carbon Steel - .30-.45%C	300°F-500°F
	Plain Carbon Steel - .45-.80%C	500°F-800°F
CARBON MOLY STEELS	Carbon Moly Steel -.10-.20%C	300°F-500°F
	Carbon Moly Steel -.20-.30%C	400°F-600°F
	Carbon Moly Steel -.30 -.35%C	500°F-800°F
MANGANESE STEELS	Silicon Structural Steel	300°F-500°F
	Medium Manganese Steel	300°F-500°F
	SAE T 1330 Steel	
	SAE T 1340 Steel	500°F-800°F
	SAE T 1350 Steel	600°F-900°F
	12% Manganese Steel	Usually not required

TABLE 2-1. Metals Preheating Chart (Continued)

Metal Group	Metal Designation	Recommended Preheat
HIGH TENSILE STEELS	Manganese Moly Steel	300°F-500°F
	Jalten Steel	400°F-600°F
	Manten Steel	400°F-600°F
	Armco High Tensile Steel	Up to 200°F
	Double Strength #1 Steel	300°F-600°F
	Double Strength #1 Steel	400°F-700°F
	Mayari R Steel	Up to 300°F
	Otiscoloy Steel	200°F-400°F
	Nax High Tensile Steel	Up to 300°F
	Cromansil Steel	300°F-400°F
	A. W. Dyn-El Steel	Up to 300°F
	Corten Steel	200°F-400°F
	Chrome Copper Nickel Steel	200°F-400°F
	Chrome Manganese Steel	400°F-600°F
	Yoloy Steel	200°F-600°F
	Hi-Steel	200°F-500°F

TABLE 2-1. Metals Preheating Chart (Continued)

Metal Group	Metal Designation	Recommended Preheat
NICKEL STEELS	SAE 2015 Steel	Up to 300°F
	SAE2115 Steel	200°F-300°F
	2-1/2% Nickel Steel	200°F-400°F
	SAE2315 Steel	200°F-500°F
	SAE 2320 Steel	200°F-500°F
	SAE 2330 Steel	300°F-600°F
	SAE 2340 Steel	400°F-700°F
MEDIUM NICKEL CHROMIUM STEELS	SAE3115 Steel	200°F-400°F
	SAE 3125 Steel	300°F-500°F
	SAE 3130 Steel	400°F-700°F
	SAE 3140 Steel	500°F-800°F
	SAE 3150 Steel	600°F-900°F
	SAE 3215 Steel	300°F-500°F
	SAE 3230 Steel	500°F-700°F
	SAE 3240 Steel	700°F-100°F
	SAE 3250 Steel	900°F-1100°F
	SAE 3315 Steel	500°F-700°F

TABLE 2-1. Metals Preheating Chart (Continued)

Metal Group	Metal Designation	Recommended Preheat
MEDIUM NICKEL CHROMIUM STEELS	SAE 3325 Steel	900°F-1100°F
	SAE 3435 Steel	900°F-1100°F
	SAE 3450 Steel	900°F-1100°F
MOLY BEARING CHROMIUM and CHROMIUM NICKEL STEELS	SAE 4140 Steel	600°F-800°F
	SAE 4340 Steel	700°F-900°F
	SAE 4615 Steel	400°F-600°F
	SAE 4630 Steel	500°F-700°F
	SAE 4640 Steel	600°F-800°F
	SAE 4820 Steel	600°F-800°F
LOW CHROME (Cr) MOLY (Me) STEELS	2% Cr. - 1/2% Mo. Steel	400°F-600°F
	2% Cr. - l/29% Mo. Steel	500°F-800°F
	2% Cr. - 1% Mo. Steel	500°F-700°F
	2% Cr. -1% Mo. Steel	600°F-800°F

TABLE 2-1. Metals Preheating Chart (Continued)

Metal Group	Metal Designation	Recommended Preheat
MEDIUM CHROME (Cr) MOLY (Me) STEELS	5% Cr. - 1/2% Mo. Steel 5% Cr. - 1/2% Mo. Steel 8% Cr. - 1% Mo. Steel	500°F-800°F 600°F-900°F 600°F-900°F
PLAIN HIGH CHROMIUM (Cr) STEELS	12-14% Cr. Type 410 16-18% Cr. Type 430 23-30% Cr. Type 446	300°F-500°F 300°F-500°F 300°F-500°F
HIGH CHROME (Cr) NICKEL (Ni) COLUMBIUM (Cb) STAINLESS STEEL	18% Cr. - 8% Ni. Type 304 25-12 Type 309 25-20 Type 310 18-8 Cb. Type 347 18-8 Mo. Type 316 18-8 Mo. Type 317	Usually does not require preheating but it maybe desirable to remove chill.

TYPES OF WEAR

Abrasion

A grinding action caused by abrasive solids sliding, rolling or rubbing against a surface. Referred to as gouging when combined with high compressive loads,

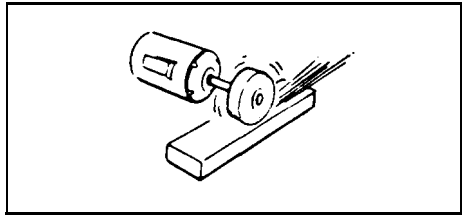

Impact

A blow or series of blows to a surface, resulting in fracture or gradual deterioration,

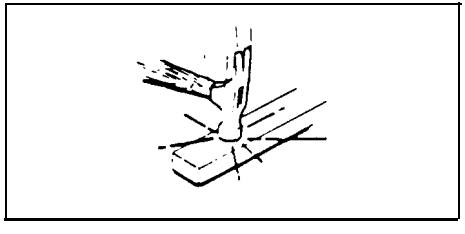

Heat

Softens metallic structures and may accelerate chemical attacks like oxidation and scaling; however, it may cause phase changes that increase hardness and brittleness.

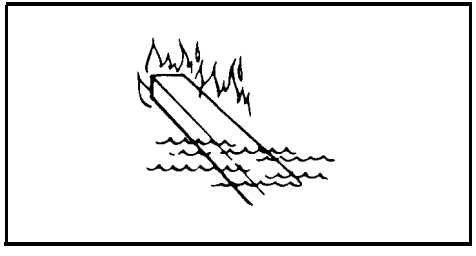

Corrosion

Deterioration of metal by chemical or electrochemical reaction with its environment.

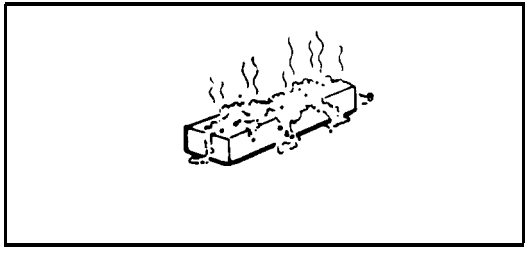

RECOMMENDED AMPERAGE AND POLARITY

Weld data showing recommended amperage and polarities is listed in Section 1 on each page for every electrode.

THE DIFFERENCE BETWEEN CROSS-CHECKING AND CRACKING

Deposits made with high allov electrodes should check on the surface. The check pattern is highly desirable as it reduces residual stresses. Without checking, the residual (or locked-in) stresses when combined with service stresses can reach a magnitude greater than the tensile strength and result in deep cracks or spalling (Figure 2-2). If checking does not occur naturally, it must be induced to avoid future failure. For example, as heat builds up in large parts, less cross checking will take place. To rectify this, forced checking can be accomplished by sponging the deposit with a wet cloth or by spraying the surface with a fine water mist. Checking may also be accelerated during the cooling period by occasionally striking the deposit with a hammer. If a check-free deposit is necessary, use a softer alloy and observe preheat and postheat requirements.

OXY-MAPP HARD-FACING

General Rules

1. Use the oxy-MAPP method for hard-facing thin cutting edges; electric arc welding is more apt to bum through. oxy-MAPP is also preferred where minimum dilution is required.

2. Most small parts made of low-, medium-or relatively high-carbon steel can be hard-faced by the oxy-MAPP process. The hard-facing of cast iron is not recommended.

3. Use a tip approximately four sizes larger than that ordinarily used to deposit a mild steel rod of the same diameter.

4. Where possible, use a jig to quickly position the part for downhand welding, especially when the part must be turned two or more times. This will save time and gas.

5. Lineup smaller parts like ditcher teeth or coal cutter bits in a row for easy pm-heating during welding.

6. Clean all areas to be hard-faced with a grinding wheel regardless of whether the part is new or used. Grinding helps eliminate pin holes and makes it easier to apply the hard metal. The ground surface should always extend beyond the hard metal deposit. In other words, if the hard metal deposit is to be 1 in. wide, the ground area should be 1-1/2 in. wide.

7. When you hard-face any type of an edged tool you increase its thickness. It is therefore desirable to draw out or sharpen all types of edged implements, new or used, before the hard metal is deposited.

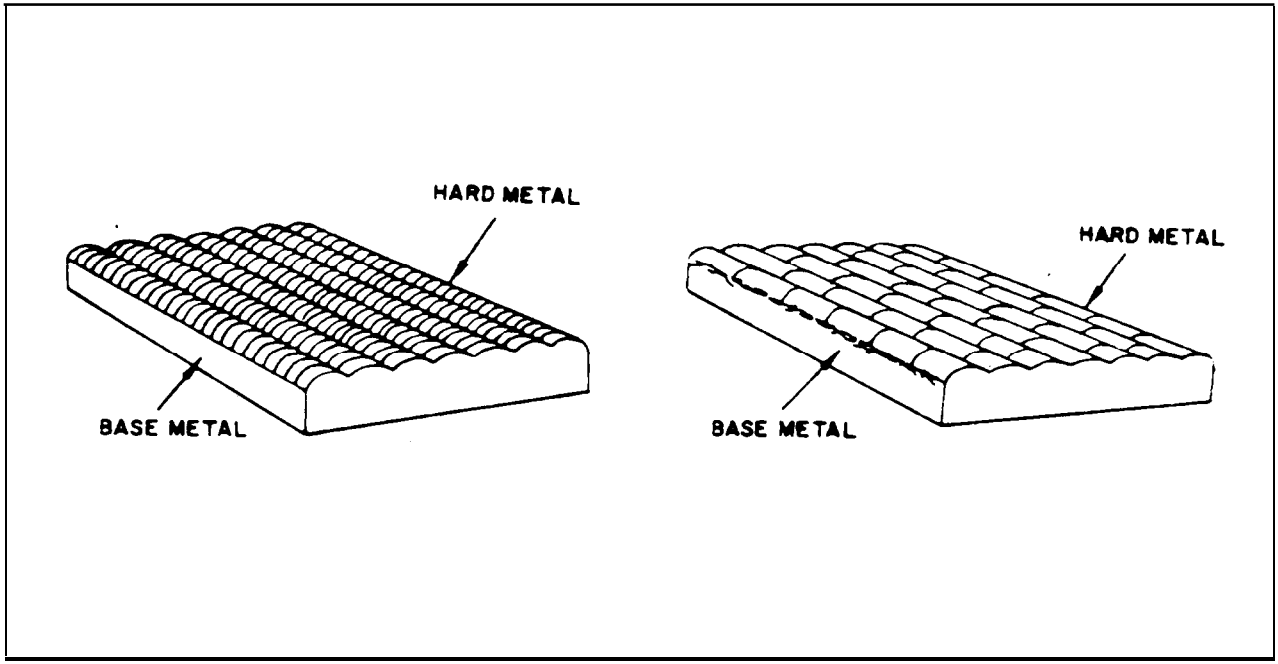

FIGURE 2-2. Cross-Checking and Cracking Comparison

FLAME ADJUSTMENTS

Three basic flame adjustments are used to deposit hard-facing rods.

The excess MAPP flames (3X and 4X as shown in Figure 2-3) are used to:

(1) Spread the heat to minimize possible burn-through on thin edges;

(2) add excess carbon to the skin of the part being hard-faced.

The additional carbon lowers the melting point and sweating temperature of the part, facilitating the deposit of the hard-facing alloy.

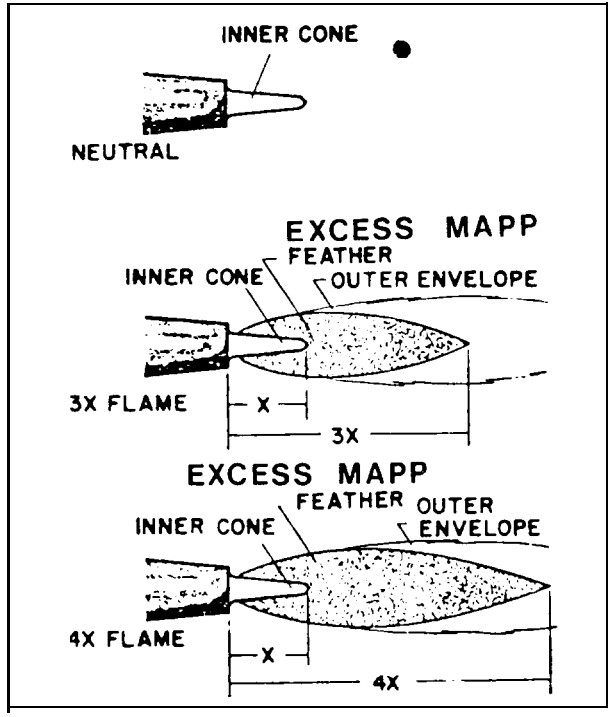

FIGURE 2-3. Flame Adjustments for Hard-Facing.

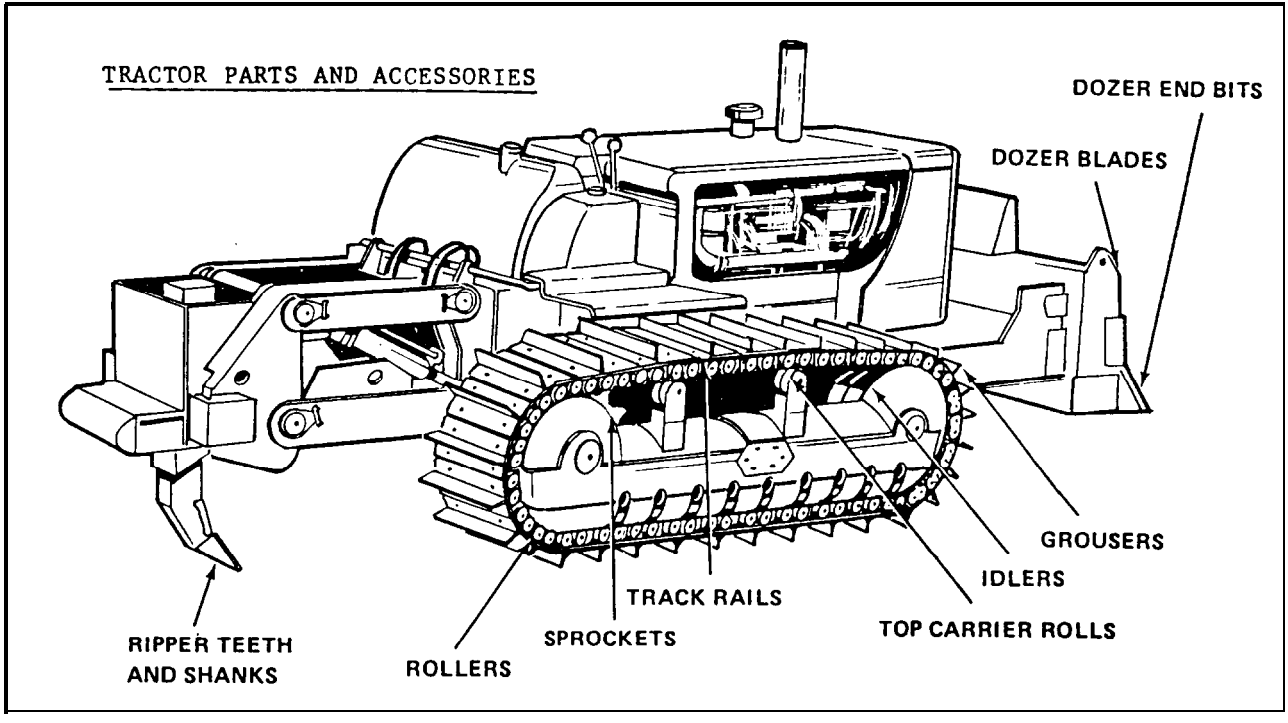

FIGURE 24. Tractor Parts and Accessories

TRACTOR PARTS AND ACCESSORIES (See Figure 2-4)

(NOTE: TO PREVENT DAMAGE FROM ELECTRICAL ARC. REMOVE BEARINGS BEFORE WELDING)

Track Rollers

Primary Electrode: Page 1-24
Alternate Electrodes: Pages 1-5, 1-3

Welding Procedures: Mount roller on jig for downhand welding. Apply transverse beads on running face and flange (Figure 2-5).

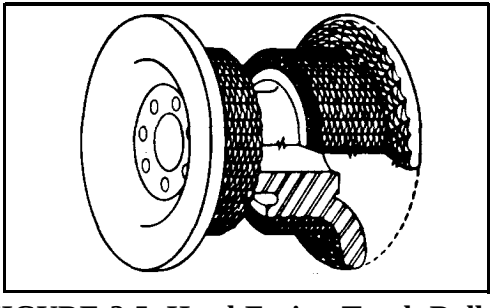

FIGURE 2-5. Hard-Facing Track Rollers

Tractor Idlers

Primary Electrode: Page 1-31
Alternate Electrodes: Pages 1-5, 1-3

Welding Procedures: Mount idler in jig for downhand welding. Beads are often applied transversely (Figure 2-6).

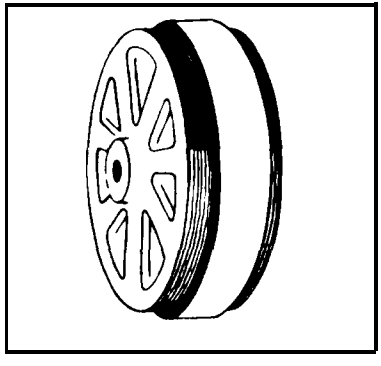

FIGURE 2-6. Hard Facing Tractor Idlers

TRACTOR PARTS AND ACCESSORIES
(Continued)

Tractor Rails

Carbon Steel

Primary Electrode: Page 1-24

Alternate Electrodes: Pages 1-5, 1-3

Welding Procedures: Do not rebuild rails until they have worn to recommended service limits. Buildup outside edges to same level as center. Apply wash passes 1/2 in. wide until entire surface is covered. Work alternately on four links to avoid overheating. Use only buildup materials; do not hardface (Figure 2-7).

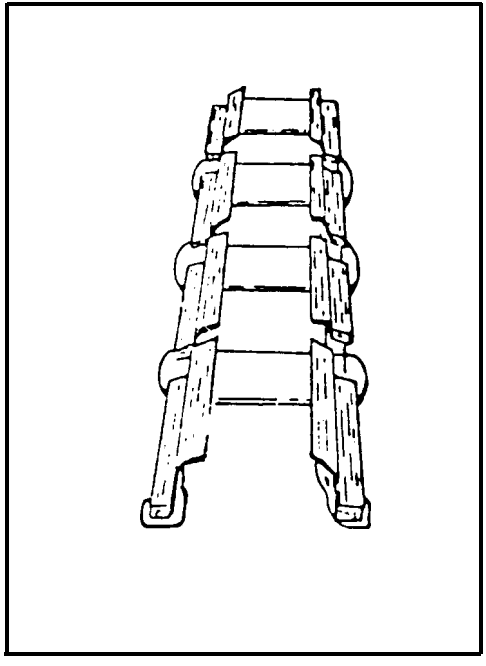

FIGURE 2-7. Rebuilding Tractor Rails

Top Carrier Rolls

Cast Iron

Primary Electrode: Page 1-14

Carbon Steel:

Primary Electrode: Page 1-24

Alternate Electrodes: Pages 1-5, 1-3

Welding Procedures: Cast Iron - Mount roller on jig for downhand welding after bushings have been pressed out and surfaces cleaned. Preheat part to 1000 - 1200°F. Play burner flame on roll during entire welding operation. Apply two layers of electrode on page 1-14 in wide transverse beads; weld alternately on opposite ends of roll. Slow cool in asbestos or lime box.

(NOTE: DO NOT USE BUILDUP ELECTRODE ON CAST IRON)

Carbon Steel - Follow same procedure with recommended alloys, but preheat is not necessary (Figure 2-8).

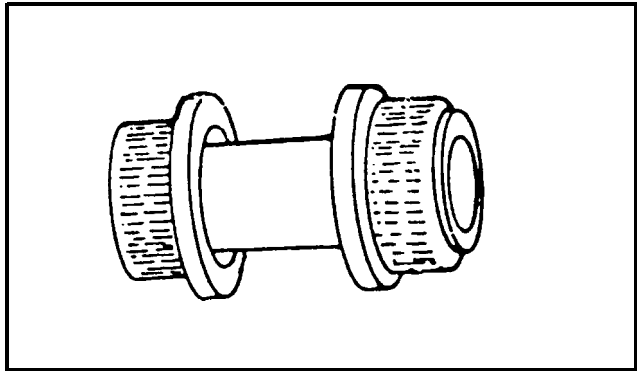

FIGURE 2-8. Hard-Facing Top Carrier Rolls

Drive Sprockets

Carbon Steel

Primary Electrode: Page 1-24

Alternate Electrodes: Pages 1-5, 1-3

Welding Procedures: Position sprocket for downhand welding. Use buildup material on badly worn areas (Figure 2-9). Use template to obtain proper shape. Grind high spots.

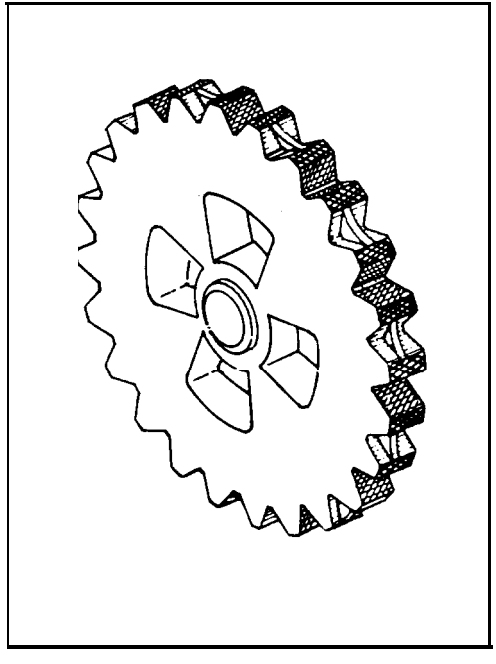

FIGURE 2-9. Hard-Facing Drive Sprockets

Tractor Grousers

Carbon Steel

Primary Electrode: Page l-25

Alternate Electrodes: Pages l-22,1-20

Welding Procedures: Anneal induction-hardened grousers before welding bar stock on grousers (Do not hardface new grousers). Rebuild cleat to original height by welding steel reinforcing bar stock to pad with appropriate electrode on page 1-3. Mark grouser lengths for three equal parts (Figure 2-10). Face outer thirds by beginning passes from center and working out. Entire length of grouser can be faced if desired, but method shown avoids stress buildup.

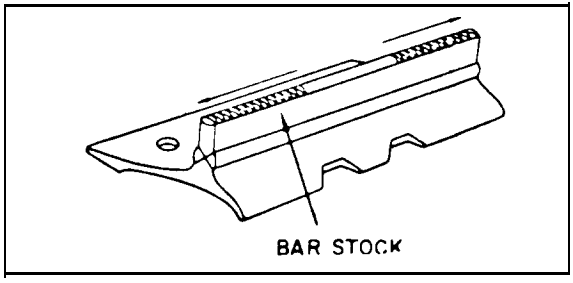

FIGURE 2-10. Hard-Facing Tractor Grousers

Ripper Teeth

Carbon Steel

Primary Electrode: Page 1-26

Alternate Electrodes: Pages 1-25, 1-22

Ripper Teeth (Continued)

Welding Procedures: Apply to top and sides of tooth covering area about 2 in. back from point. Hard-face remainder of tooth as shown in Figure 2-11.

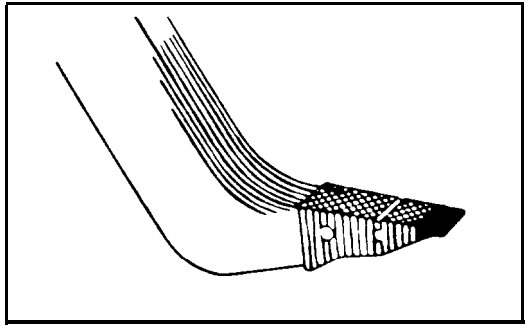

FIGURE 2-11. Hard-Facing Ripper Teeth

Bulldozer End Bits

Carbon Steel

Primary Electrode: Page 1-25

Alternate Electrodes: Pages 1-22, 1-20

Welding Procedures: Place end bit in flat position and apply beads across outer comer and along edges. On worn end bits, weld new corner and hard-face (Figure 2-12). If work involves impact, use above mentioned electrodes; in case of severe abrasion and moderate impact, use electrode on page 1-26.

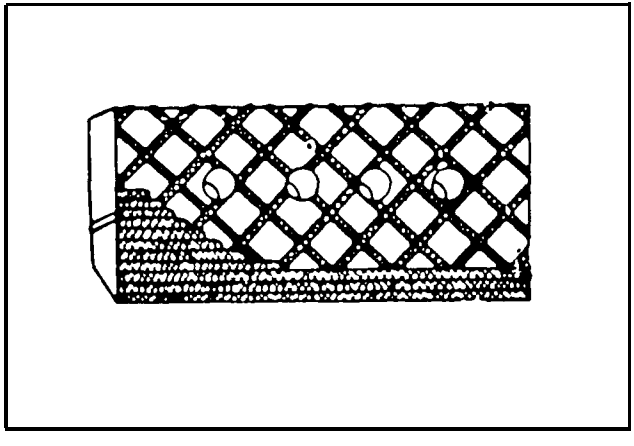

FIGURE 2-12. Hard-Facing Bulldozer End Bits

Bulldozer Blades

Carbon Steel

Primary Electrode: Page 1-25

Alternate Electrodes: Pages 1-22, 1-20

Welding Procedures: Position blade in suitable prehending jig or where necessary, bolt blade to moldboard. Use skip weld technique. Apply stringer beads to make deposit 1-1/2 in. wide (Figure 2-13). If work involves impact, use electrode on page 1-25; in case of severe abrasion and moderate impact, use electrode on page 1-26 which provides maximum service life. NOTE: HIGH CARBON BLADES MUST BE PREHEATED BEFORE HARD FACING.

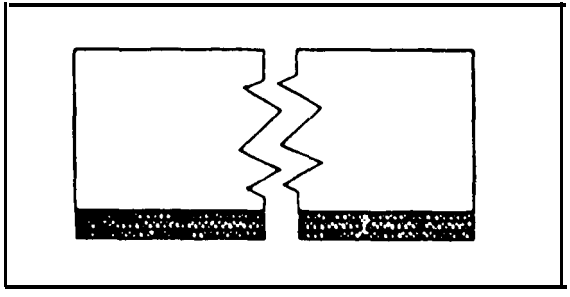

FIGURE 2-13. Hard-Facing Bulldozer Blades

Riper Shanks

Carbon Steel

Primary Electrode: Page 1-26

Alternate Electrodes: Pages 1-25, 1-22

Welding Procedures: Some ripper shanks are made of difficult-to-weld steels but can be protected without ever striking an arc on the base metal by fabricating a sleeve that fits tightly around the shank. Cut side and back panels from 1/2 in. mild steel plate; use 1 in. plow steel for front panel. Join front and side panels with mild steel electrodes and slip unit around shank (Figure 2-14). Weld back panel in place. For manual welding, apply above-mentioned electrodes in waffle pattern on front panel and on side panels. Shanks made of weldable steels can be protected by applying same patterns directly on base metal.

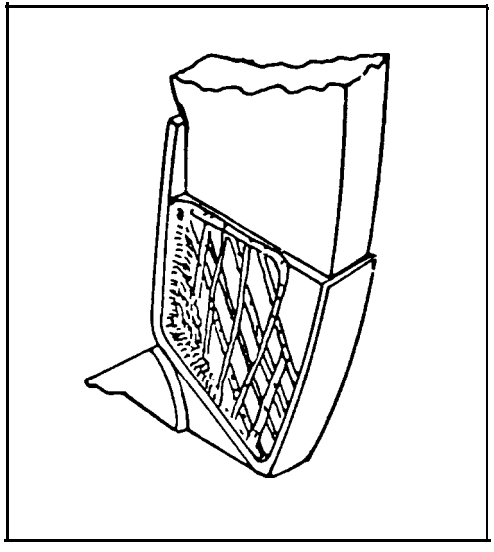

FIGURE 2-14. Hard-Facing Ripper Shanks

Rock Rake

Carbon Steel

Primary Electrode: Page 1-26

Alternate Electrodes: Pages 1-22, 1-20

Welding Procedures: Hard-face rock rake teeth when new for best service life. Deposit electrode in slight weave beads running parallel to flow of rock; overlay top and sides of each tooth with heavy wash pass about 2 in. from tip. Do not allow teeth to wear more than 1/4 in. before rehard-facing (Figure 2-15).

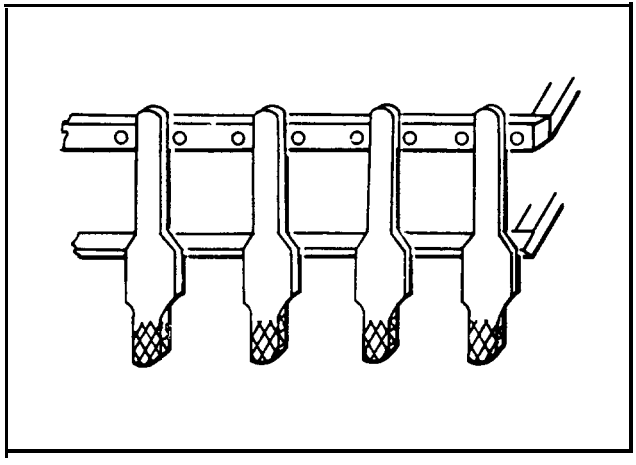

FIGURE 2-15. Hard-Facing Rock Rake Teeth

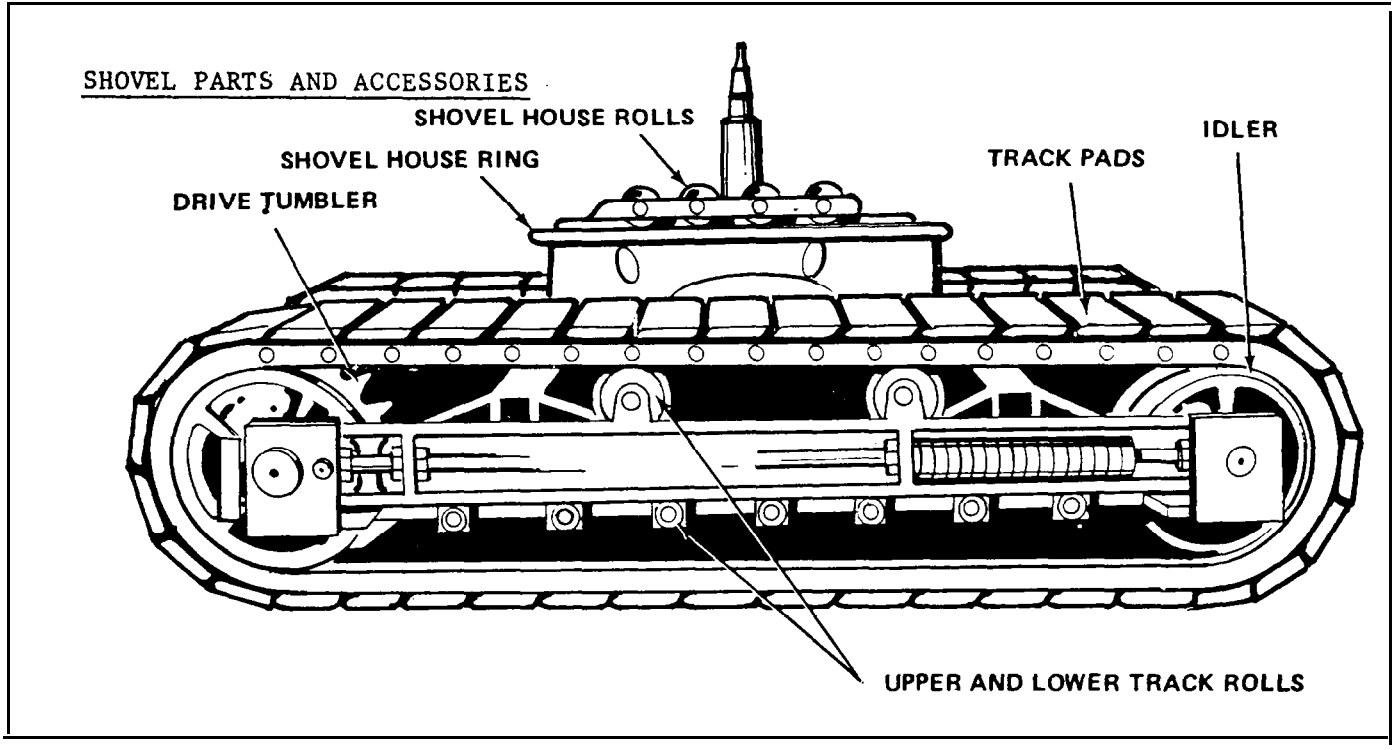

FIGURE 2-16. Shovel Parts and Accessories

Shovel Rollers

Carbon Steel

Primary Electrode: Page l-24

Alternate Electrodes: Pages l-5,1-3

Welding Procedures: Construct jig so roller can be turned for downhand welding. Rebuild with buildup **material to original** size (Figure 2-17).

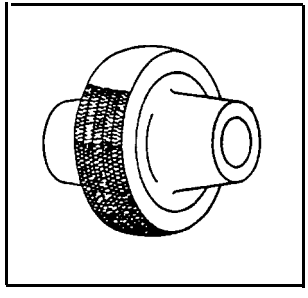

FIGURE 2-17. Hard-Facing Shovel Rollers

Shovel Track Pads

Carbon Steel

Primary Electrode: Page 1-24

Alternate Electrodes: Pages 1-5, 1-3

Manganese Steel

Primary Electrode: Page 1-22

Alternate Electrodes: Page 1-25

Welding Procedures: Start application on lugs. With manual process, rebuild worn areas to original size with recommended buildup material (Figure 2-18).

SHOVEL PARTS AND ACCESSORIES
(Continued)

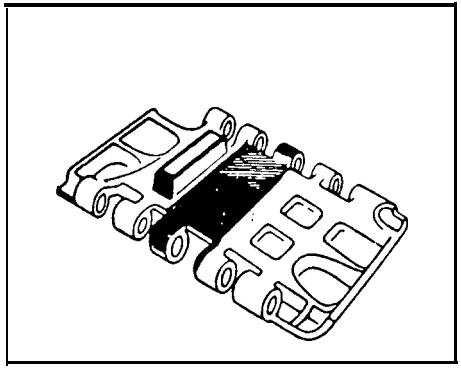

FIGURE 2-18. Hard-Facing Shovel Track Pads

Shovel Idlers

Carbon Steel

Primary Electrode: Page l-24

Alternate Electrodes: Pages l-5,1-3

Welding Procedures: Construct jig so idler can be turned for downhand welding.

Rebuild with buildup material to original size (Figure 2-19).

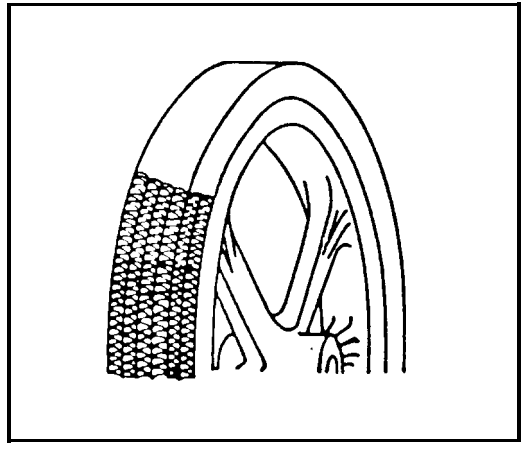

FIGURE 2-19. Hard-Facing Shovel Idlers

SHOVEL PARTS AND ACCESSORIES
(Continued)

Shovel Drive Tumblers

Carbon Steel

Primary Electrode: Page l-24

Alternate Electrodes: Pages l-5,1-3

Manganese Steel

Primary Electrode: Page l-22

Alternate Electrodes: Page l-20

Welding Procedures: Construct jig so tumbler can be turned for downhand welding. Rebuild with buildup material to original size. Use template to obtain proper size (Figure 2-20).

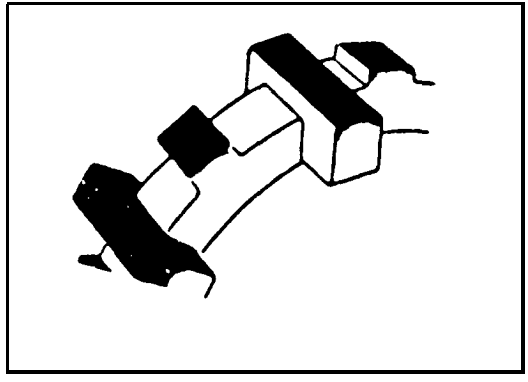

FIGURE 2-20. Hard-Facing Shovel Drive Tumblers

Shovel House Rolls

Carbon Steel

Primary Electrode: Page 1-24

Alternate Electrodes: Pages 1-5, 1-3

SHOVEL PARTS AND ACCESSORIES
(Continued)

Welding Procedures: House rolls are generally made of high carbon steel and should be preheated to at least 500°F. Mount roll on jig for downhand welding. Rebuild worn rolls with recommended buildup material in transverse beads across face. Machine or grind to proper size (Figure 2-21).

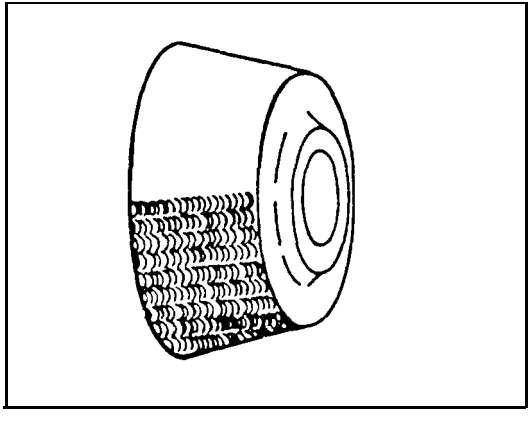

FIGURE 2-21. Hard-Facing Shovel House Rolls

Shovel and Dragline Buckets

Selection of one weld pattern over another when hard-facing shovel and dragline buckets is important. One hard-facing alloy will not work satisfactorily under all wear conditions. Likewise, one hard-facing pattern will not perform the same under all wear conditions.

A bucket working in sand with hard-facing beads applied at right angles to the flow of material will have a longer service life than one with beads applied parallel to the flow.

A waffle pattern of beads gives even better protection to a bucket because the pattern forms small pockets where damp dirt becomes packed. This results in abrasive soil working against more soil. Both the hard-facing and the base metal are thus protected.

A bucket working in dry, large-sized slag with hard-facing beads applied at right angles to the flow of material will be subjected to high abrasive wear. Beads applied in the same direction of flow will, in this case, allow slag to ride on top of the hard metal beads

without imposing wear on the base metal between the beads.

Another effective hard-facing pattern is the use of small dots of hard metal alloy spaced close together. This method produces an effective hard-facing pattern, while reducing the heat input from the welding operation. Chance of overheating high grade steel used in some buckets is practically eliminated.

The dots arc first applied on wide centers, the welder gradually fills in the spaces until the area to be hard-faced is covered with closely spaced dots of hard metal (Figure 2-22).

Successful hard-facing patterns are found by trial and error. What works in one instance may not in another. Knowing the type of wear encountered, how it is imposed, and the proper alloy to use, will help to apply the most effective bead pattern. Check the service life received and the wear pattern developed. Next time hard-facing is applied, alter the pattern as required and check results against previous application.

Recommended Alloys:

For relatively moderate wear, use electrodes on page 1-25 as a primary choice, and electrodes on page 1-22, or 1-27 as alternate choices. For extreme abrasion, use electrodes on page 1-26 as a primary choice and electrodes on pages 1-27 or 1-22 as alternate choices. Skip weld on manganese buckets to avoid overheating. Where possible, position for downhand welding.

Wear Plates:

Use stainless steel electrodes on page 1-20 to weld wear plates to worn buckets. For best service life, hard-face wear plates as described above.

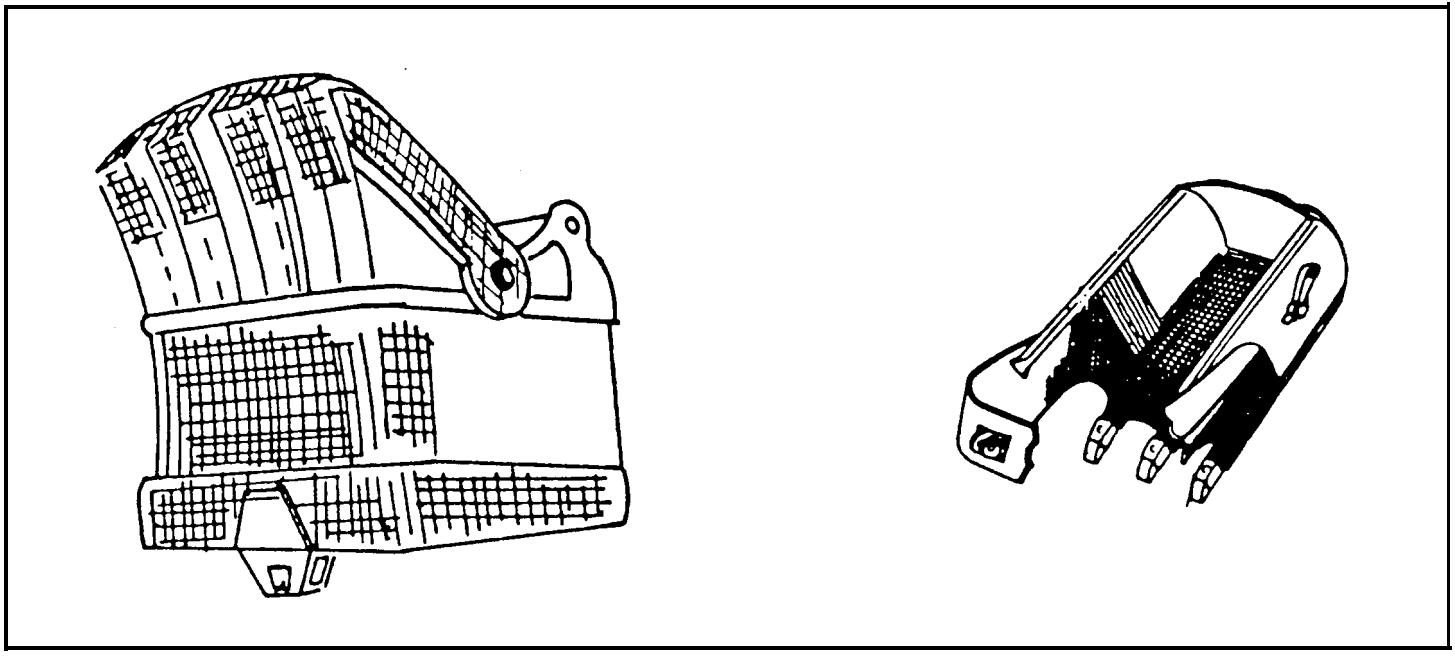

FIGURE 2-22. Hard-Facing Shovel and Dragline Buckets

SHOVEL PARTS AND ACCESSORIES
(Continued)

Shovel Teeth

Hard-face shovel teeth when they are new, before putting them in service. The weld bead pattern used on shovel teeth can have a marked effect on service life. Teeth working primarily in rock should be hard-faced with beads running the length of the tooth to allow the rock to ride on the hard metal beads. When working in dirt, clay or sand, run the beads across the flow of material (Figure 2-23) so it will fill cavities between the weld beads and give the base metal added protection. Another effective pattern is the waffle or cross hatch (Figure 2-24). Apply hard-facing to the top and sides of the tooth 2 in. up from point. Stringer beads behind a solid deposit reduces wash (Figure 2-25). Where abrasion and impact are extreme, use electrodes on pages 1-25, 1-22, or 1-20. In cases where impact is moderate and abrasion severe, use electrodes on pages 1-26, 1-25, or 1-22.

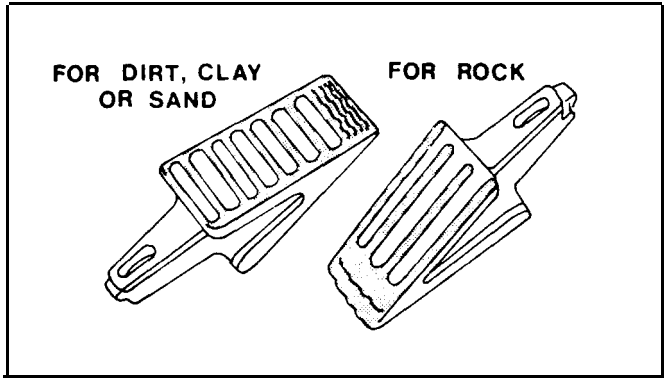

FIGURE 2-23. Hard-Facing Shovel Teeth

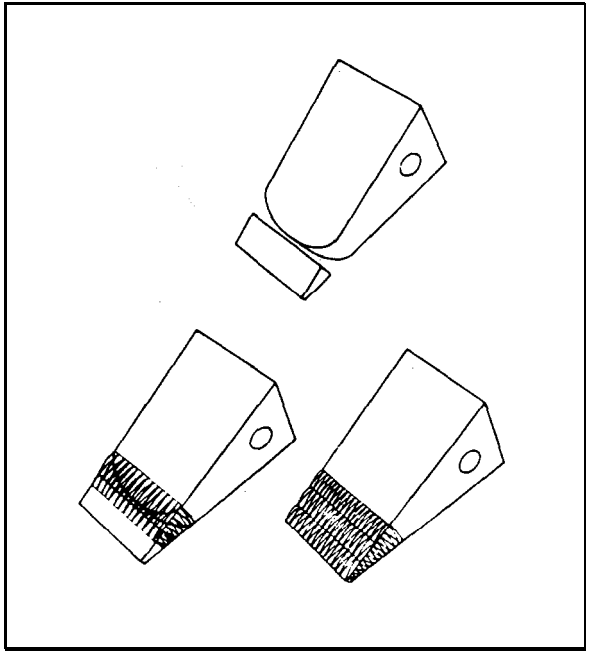

FIGURE 2-24. Repainting Shovel Teeth

Repainting Shovel Teeth:

Weld manganese repointer bars to manganese teeth with electrodes on page 1-22 or page 1-20. Weld carbon steel bars to carbon steel teeth using electrodes on page 1-3, 1-1, or 1-2. Weld dissimilar metals (for example, manganese bars to carbon steel teeth) with stainless electrodes on page 1-20. Hard-face repointed teeth.

Shovel Bucket Tooth Adapters

Carbon Steel

Primary Buildup Electrode: Page 1-24

Primary Hard-Face Electrode: Page 1-25

Alternate Buildup Electrodes: Page 1-5, 1-3, 1-22, or 1-20

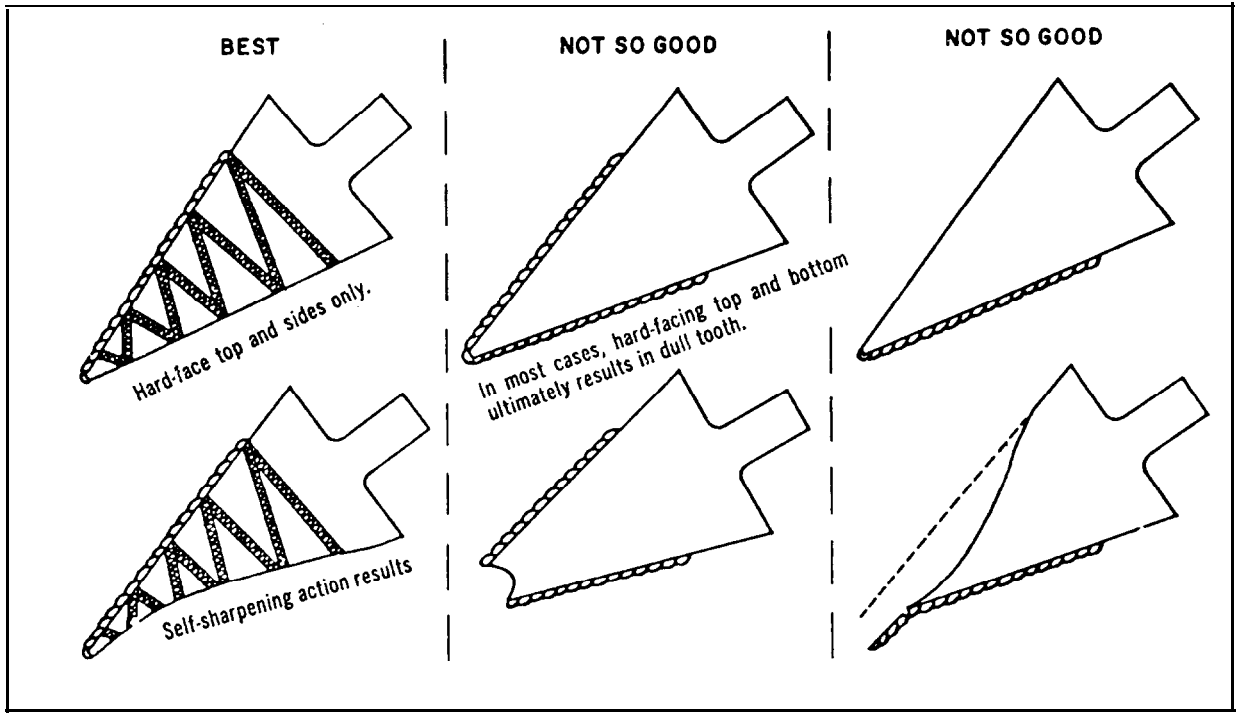

FIGURE 2-25. Comparison of Hard-Facing Patterns for Shovel Teeth

SHOVEL PARTS AND ACCESSORIES
(Continued)

Alternate Hard-face Electrodes: Pages 1-22, or 1-20

Manganese Steel

Primary Buildup Electrode: Page 1-22

Primary Hard-face Electrode: Page 1-26

Alternate Buildup Electrode: Page 1-20

Alternate Hard-face Electrodes: Pages 1-25, or 1-22

Welding Procedures: Buildup badly worn areas with recommended material. Apply stringer beads of hard-facing alloy in waffle pattern over entire wearing surface (Figure 2-26). Use electrodes on page 1-25, 1-22, or 1-20 for areas of relatively moderate wear. For extreme abrasion and impact, use electrodes on pages 1-26, 1-25, or 1-22.

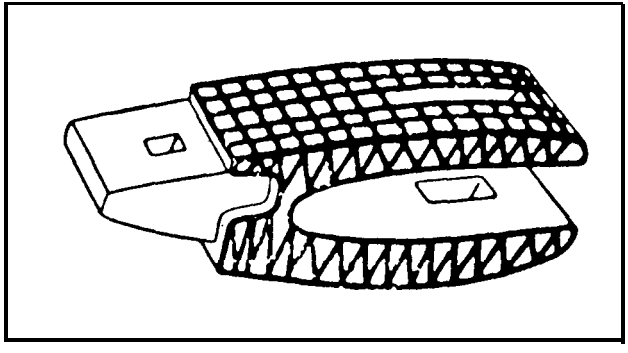

FIGURE 2-26. Hard-Facing Shovel Bucket Tooth Adapters

Shovel Latch Plates

Carbon Steel

Primary Electrode: Page 1-24

Alternate Electrodes: Pages 1-5 or 1-3

Manganese Steel

Primary Electrode: Page 1-22

Alternate Electrode: Page 1-20

Welding Procedures: Rebuild to size as shown (Figure 2-27).

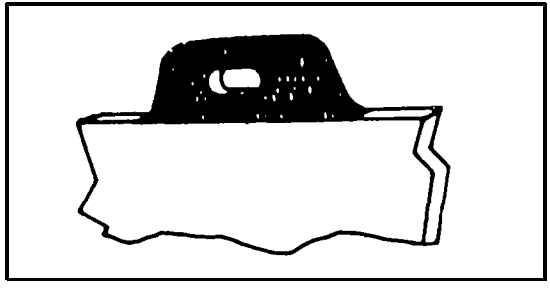

FIGURE 2-27. Hard-Facing Shovel Latch Plates

Shovel Latch Bars

Carbon Steel

Primary Electrode: Page 1-24

Alternate Electrodes: Pages 1-5, or 1-3

Manganese Steel

Primary Electrode: Page 1-22

Alternate Electrode: Page 1-20

Welding Procedures: Rebuild as shown (Figure 2-28); grind to size.

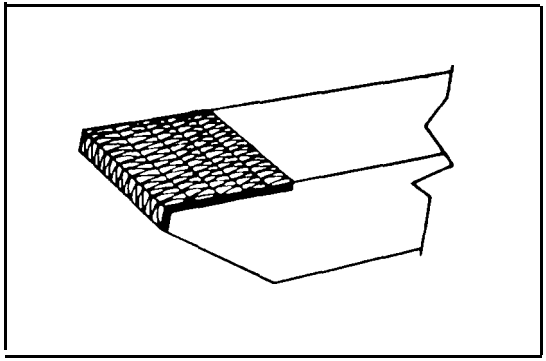

FIGURE 2-28. Hard-Facing Shovel Latch Bars

Shovel Boom Heels

Carbon Steel

Primary Electrode: Page 1-24

Alternate Electrodes: Page 1-5 or 1-3

Manganese Steel

Primary Electrode: Page 1-22

Alternate Electrode: Page 1-20

Welding Procedures: Apply hard-facing to worn areas (Figure 2-29). Use template to insure fit.

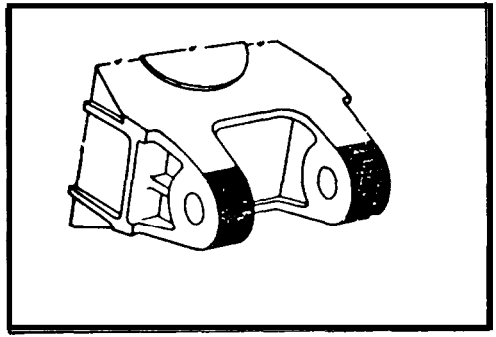

FIGURE 2-29. Hard-Facing ShoveI Boom Heels

SHOVEL PARTS AND ACCESSORIES
(Continued)

Cable Sheaves

Carbon Steel

Primary Electrode: Page l-24

Alternate Electrodes: Pages l-22 or l-20

Welding Procedures: Position on jig so sheave can be turned for downhand welding. Build up badly worn areas and apply alloy in circumferential beads. Use slight weave (Figure 2-30). Be sure to use proper preheat and postheat where necessary.

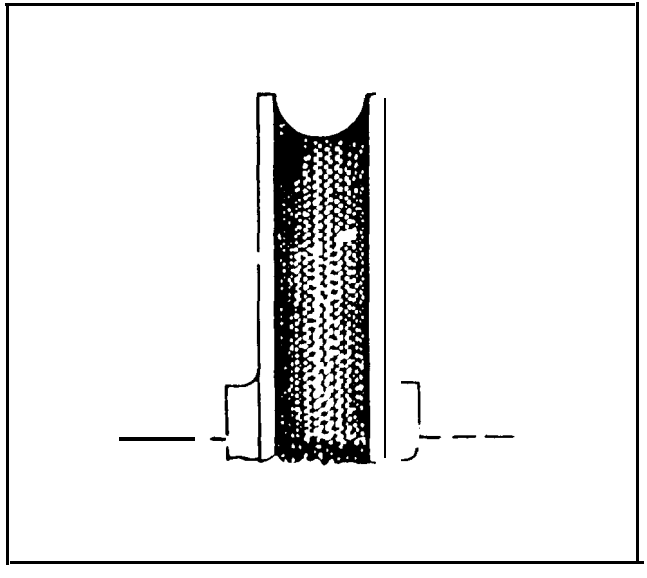

FIGURE 2-30. Hard-Facing and Rebuilding Worn Cable Sheaves

Dragline Pins

Carbon Steel

Primary Electrode: Page 1-26

Alternate Electrodes: Pages 1-25 or 1-22

Welding Procedures: Hard-face ends of pin using above-mentioned electrodes (Figure 2-3 1).

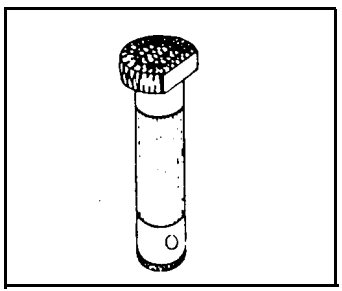

FIGURE 2-31. Hard-Facing and Rebuilding Dragline Pins

Rebuild bearing surface of pin using electrodes on pages 1-24, 1-5, or 1-3. Grind to proper size.

Dragline Chains

Carbon Steel

Primary Electrode: Page 1-24

Alternate Electrodes: Pages 1-5 or 1-3

Manganese Steel

Primary Electrode: Page 1-22

Alternate Electrode: Page 1-20

Welding Procedures: Rebuild link-to-link wear areas on carbon steel and manganese steel chains using above-mentioned electrodes (Figure 2-32). Hard-face outside wear areas of chains using electrodes on pages 1-27, 1-26, or 1-24.

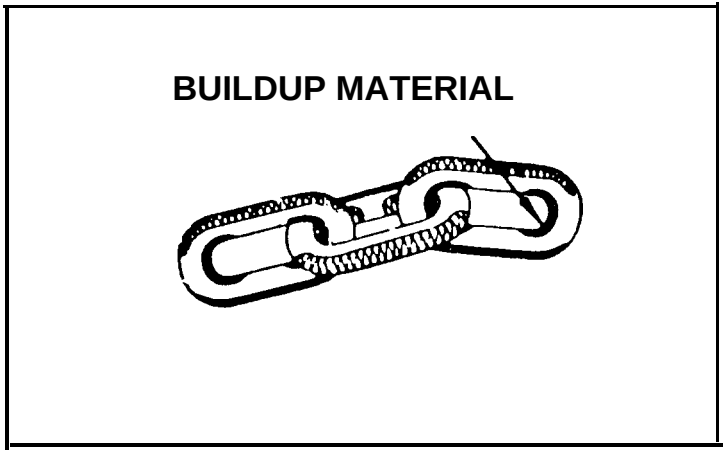

FIGURE 2-32. Hard-Facing and Rebuilding Worn Dragline Chains

Dragline Clevis

Carbon Steel

Primary Electrode: Page 1-20

Alternate Electrodes: Pages 1-5, 1-3

Manganese Steel

Primary Electrode: Page 1-22

Alternate Electrode: Page 1-20

Welding Procedures: Rebuild metal-to-metal wear areas on steel and manganese clevises using above mentioned electrodes (Figure 2-33). Hard-face outside wear areas using electrodes on pages 1-26, 1-24, or 1-22.

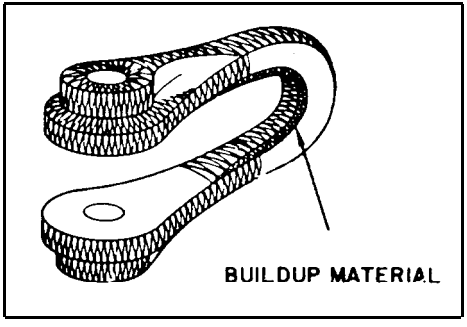

FIGURE 2-33. Hard-Facing and Rebuilding Worn Dragline Clevis

Clam Shell Buckets

Carbon Steel

Primary Electrode: Page 1-24

Alternate Electrodes: Pages 1-5 or 1-3

Manganese Steel

Primary Electrode: Page 1-22

Alternate Electrode: Page 1-20

Welding Procedures: Skip weld manganese lips. Steel lips need no special care other than usual procedure to prevent warpage (Figure 2-34).

Hard-face top, bottom and sides of lip using electrodes on pages 1-26, 1-25, or 1-23. Wear strips on bucket should also be hard-faced.

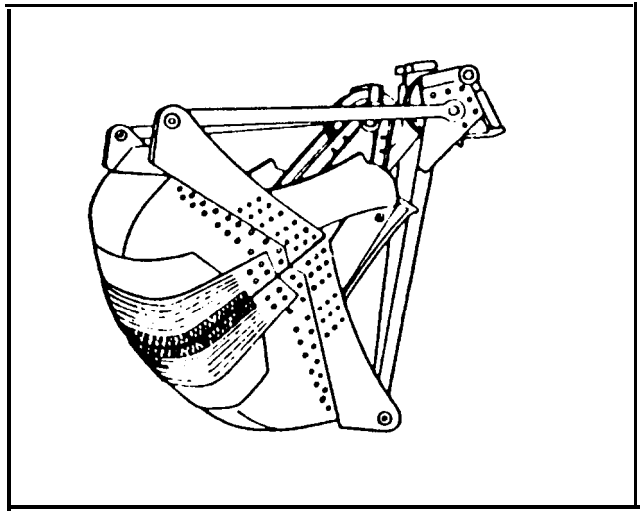

FIGURE 2-34. Hard-Facing Clam Shell Bucket

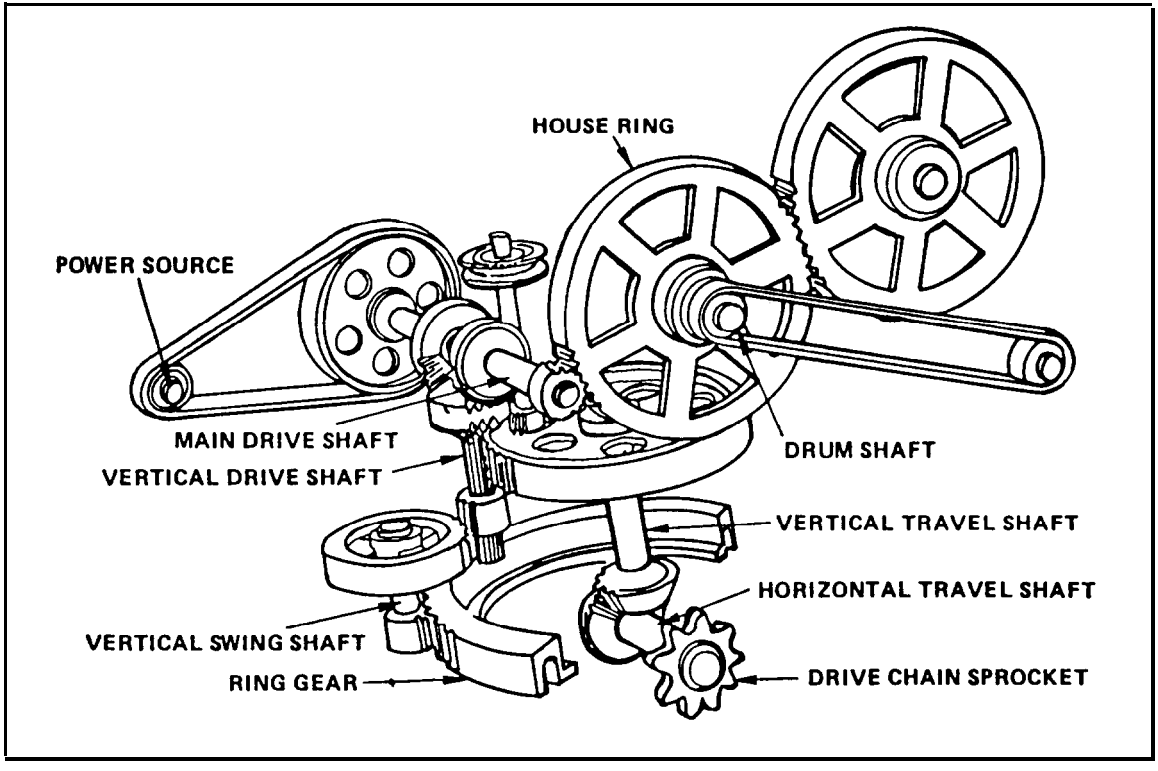

FIGURE 2-35. Power Shovel Transmission Components

POWER SHOVEL TRANSMISSIONS

Shovel Ring Gears

Carbon Steel

Primary Electrode: Page 1-24

Alternate Electrodes: Pages 1-5 or 1-3

Welding Procedures: Restore worn teeth with buildup and hand-grind to finished dimensions (Figure 2-36). Be sure to use proper preheat and postheat where required.

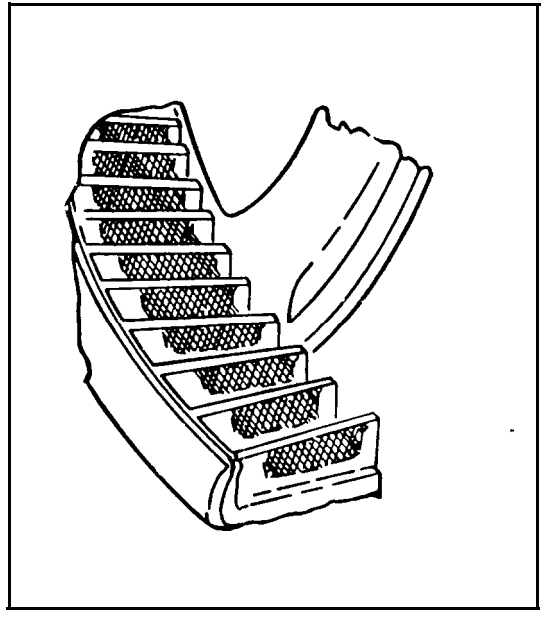

FIGURE 2-36. Hard-Facing and Restoring Worn Shovel Ring Gear Teeth

Shovel Swing Gears

Carbon Steel

Primary Electrode: Page 1-24

Alternate Electrodes: Pages 1-5 or 1-3

Welding Procedures: Restore worn teeth with buildup and hand-grind to finished dimension (Figure 2-37). Be sure to use proper preheat and postheat where required.

Horizontal Travel Gears

Carbon Steel

Primary Electrode: Page 1-24

Alternate Electrodes: Pages 1-5 or 1-3

Welding Procedures: Restore worn teeth with buildup material and hand-grind to finished size. Be sure to use proper preheat and postheat where required.

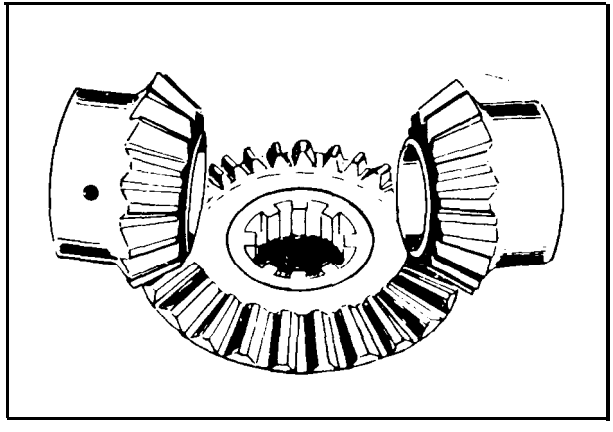

FIGURE 2-37. Hard-Facing and Restoring Worn Horizontal Travel Gear Teeth

House Rings

Carbon Steel

Primary Electrode: Page 1-24

Alternate Electrodes: Pages 1-5 or 1-3

Welding Procedures: Shovel house rings should be preheated to 500°F. Use recommended material to bring ring to size and finish-machine (Figure 2-38).

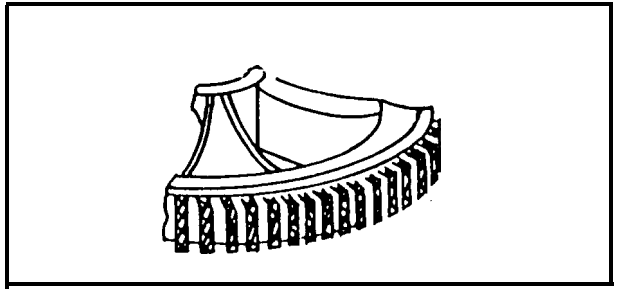

FIGURE 2-38. Hard-Facing and Restoring Worn House Ring Gear Teeth

Shafts

Carbon Steel

Primary Electrode: Page 1-24

Alternate Electrodes: Pages 1-5 or 1-3

Welding Procedures: Most shafts are made of weldable medium- or low-alloy steel and can be reconditioned using the above-mentioned electrodes to produce a check-free surface with outstanding physical properties. Large shafts should be thoroughly preheated to, and kept at, 600- 700°F during welding. Small shafts should be thoroughly soaked with a preheat of 400- 500°F. Slow cooling is mandatory.

After observing preparatory procedures, deposit 1 in. wide weave beads of the above-mentioned electrodes longitudinaly across the shaft. Overbuild about 1/8 in. to allow for finish-machining (Figure 2-39).

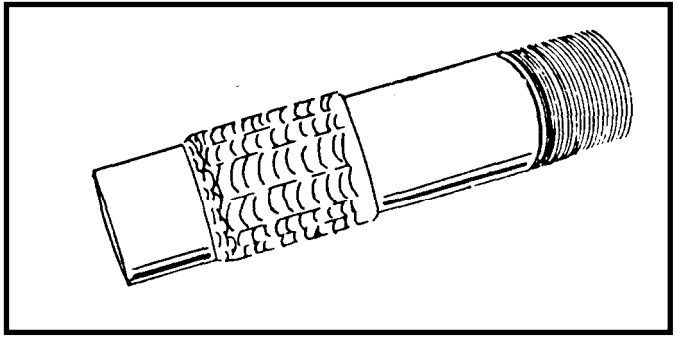

FIGURE 2-39. Hard-Facing and Restoring Worn Shafts

DITCHERS AND HOLE AUGERS

Ditcher Drive Segments

Carbon Steel

Primary Electrode: Page 1-24

Alternate Electrodes: Pages 1-5 or 1-3

Welding Procedures: Position for downhand welding (Figure 2-40). Apply hard-facing using a template to obtain proper shape. Apply beads transversely. Grind high spots.

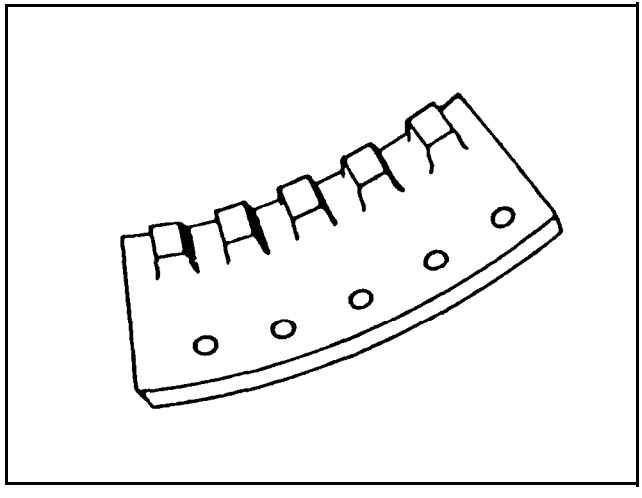

FIGURE 2-40. Hard-Facing Ditcher Drive Segments

DITCHERS AND HOLE AUGERS (Continued)

Ditcher Rolls

Carbon Steel

Primary Electrode: Page 1-24

Alternate Electrodes: Pages 1-5 or 1-3

Welding Procedures: Construct jig so roller can be turned (Figure 2-4 1). Apply weld metal to face and to flange where necessary. Grind high spots.

Cast Iron Rollers - Preheat to 1000- 1200°F and maintain. Use electrode on page 1-14 in wide transverse beads. Slow cool.

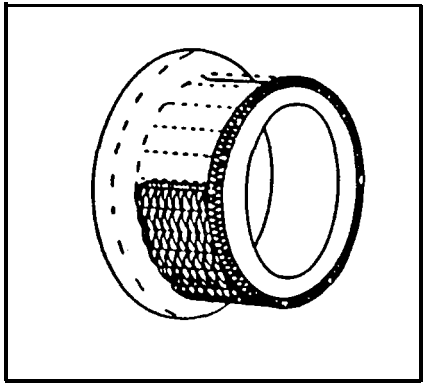

FIGURE 2-41. Hard-Facing Ditcher Rolls

Ditcher Drive Sprockets

Carbon Steel

Primary Electrode: Page 1-24

Alternate Electrodes: Pages 1-5 or 1-3

DITCHERS AND HOLE AUGERS (Continued)

Welding Procedures: Position for welding (Figure 2-42). Apply buildup using a template. Apply beads transversely. Grind high spots.

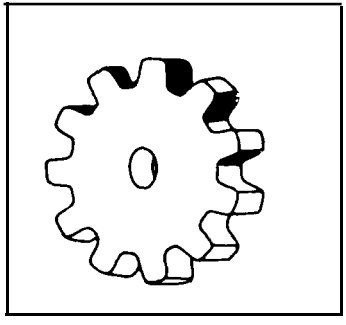

FIGURE 2-42. Hard-Facing Ditcher Drive Sprockets

Ditcher Teeth

Carbon Steel

Primary Electrode: Page 1-26

Alternate Electrodes: Pages 1-25 or 1-22

Welding Procedures: Apply above-mentioned electrodes starting at the point and extend deposits 1 in. upward (Figure 2-43).

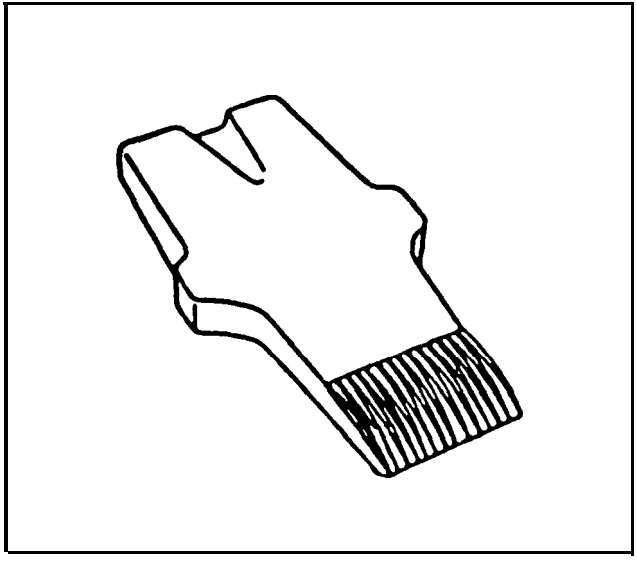

FIGURE 2-43. Hard-Facing Ditcher Teeth

DITCHERS AND HOLE AUGERS (Continued)

Post Hole Augers

Carbon Steel

Primary Electrode: Page 1-26

Alternate Electrodes: Pages 1-25 or 1-22

Welding Procedures: Apply above-mentioned electrodes to upper face of flight and flight periphery; hard-face top side of cutter teeth for self-sharpening action and apply hard-facing to reaming edge and cutting wings of pilot bit (Figure 2-44).

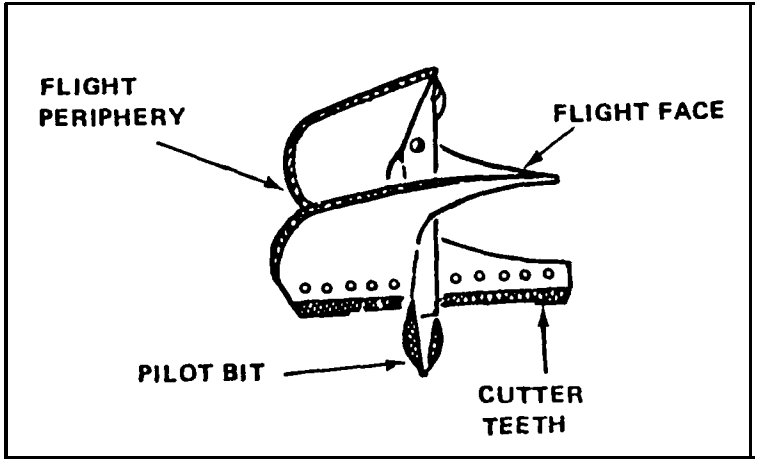

FIGURE 244. Had-Facing Post Hole Augers

ASPHALT MIXERS AND PADDLES

Asphalt Mixer Paddles

Carbon Steel

Primary Electrode: Page 1-26

Alternate Electrodes: Pages 1-25 or 1-22

Welding Procedures: On weldable steel paddles hard-face outer edge and leading edge solid using above-mentioned electrodes. Apply stringers on leading face of paddle in line with material flow (Figure 2-45). Apply stringer beads around bolt hold.

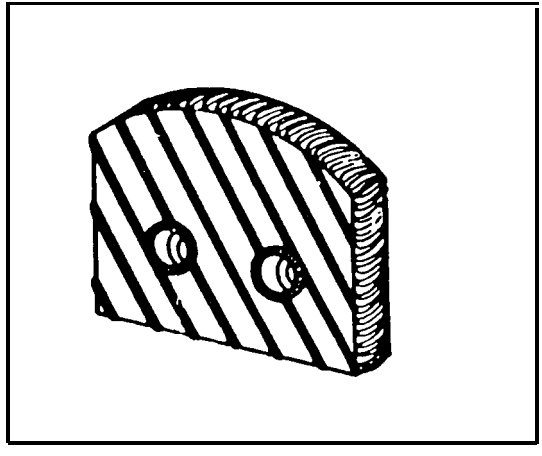

FIGURE 2-45. Hard-Facing Asphalt Mixer Paddles

ASPHALT MIXERS AND PAVERS (Continued)

Asphalt Mixer Paddle Shanks

Carbon Steel

Primary Electrode: Page 1-26

Alternate Electrodes: Pages 1-25 or 1-22

Welding Procedures: Build up leading shoulder to protect bolt; weld on suitable patch as filler. Apply hard-facing to areas shown in Figure 2-46.

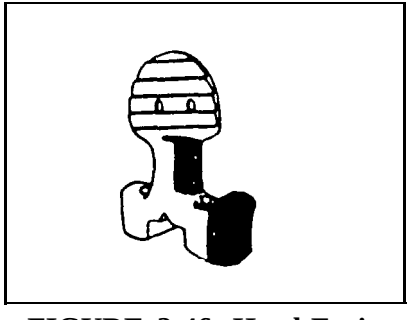

FIGURE 2-46. Hard-Facing Asphalt Mixer Paddle Shanks

Paving Machine Paddles

Carbon Steel

Primary Electrode: Page 1-26

Alternate Electrodes: Pages 1-25 or 1-22

Welding Procedures: Face edge and top using above-mentioned electrodes (Figure 2-47).

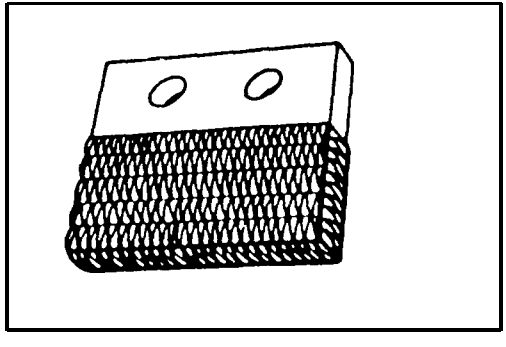

FIGURE 2-47. Hard-Facing Paving Machine Paddles

ASPHALT MIXERS AND PAVERS (Continued)

Paving Agitator Blades

Carbon Steel

Primary Electrode: Page 1-26

Alternate Electrodes: Pages 1-25 or 1-22

Welding Procedures. Apply hard-facing to top and both faces of blade (Figure 2-48).

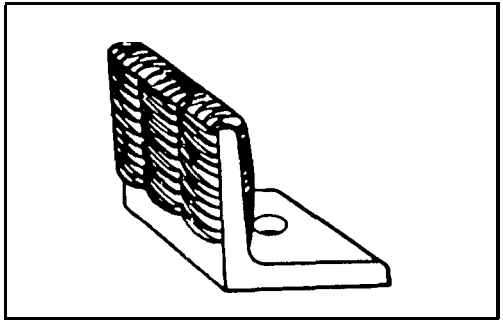

FIGURE 2-48. Hard-Facing Paving Machine Agitator Blades

Paving Screw Conveyors

Carbon Steel

Primary Electrode: Page 1-26

Alternate Electrodes: Pages 1-25 or 1-22

Welding Procedures: Apply above-mentioned electrodes where wear occurs on flight face and edges (Figure 2-49).

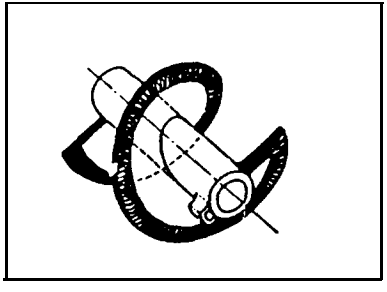

FIGURE 249. Hard-Facing Paving Machine Screw Conveyors

ASPHALT MIXERS AND PAVERS (Continued)

Scraper Cutters and Sides

Carbon Steel

Primary Electrode: Page 1-26

Alternate Electrodes: Pages 1-25 or 1-22

Welding Procedures: Remove bolt-on cutter blades from scraper before hard-facing. Overlay leading and bottom edge using above-mentioned electrodes as indicated by wear pattern (Figure 2-50). Hard-face sides with waffle pattern using electrodes on pages 1-25, 1-22, or 1-20.

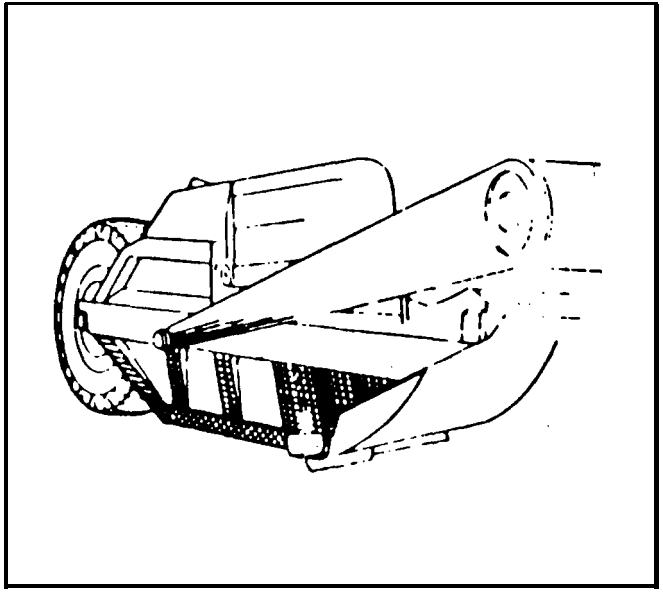

FIGURE 2-50. Hard-Facing Scraper Cutters and Sides

ASPHALT MIXERS AND PAVERS (Continued)

Scraper Blades

Carbon Steel

Primary Electrode: Page 1-26

Alternate Electrodes: Pages 1-25 or 1-22

Welding Procedures: Position blades of weldable steel in suitable prehending jig or bolt blade to scraper moldboard. Preheat to at least 400°F. Apply above-mentioned electrodes with slight weaving motion. Deposit need not exceed 1-1/2 in. width. Another method is to bolt pair of blades back-to-back and use skip-weld technique, starting at center and working toward each end, welding on the four cutting edges alternately (Figure 2-5 1).

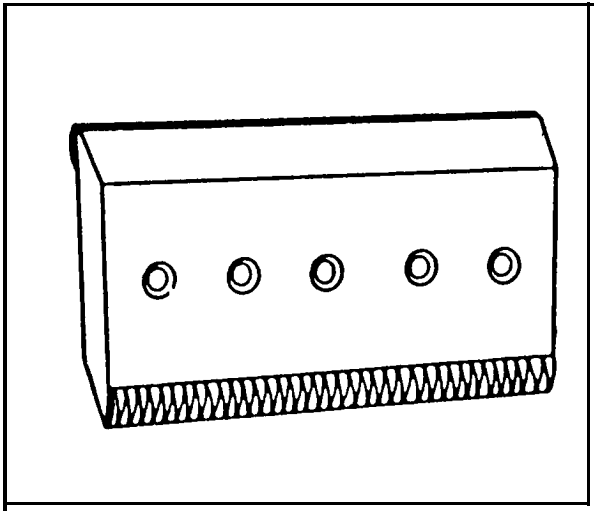

FIGURE 2-51. Hard-Facing Asphalt Mixer Scraper Blades

ASPHALT MIXERS AND PAVERS (Continued)

Grader Blades

Carbon Steel

Primary Electrode: Page 1-26

Alternate Electrodes: Pages 1-25 or 1-22

Welding Procedures: Position blade of weldable steel in suitable prehending jig or bolt two blades back-to-back and preheat to 500- 600°F. Apply above-mentioned electrodes in stringer beads. Use skip weld method (Figure 2-52). Start at center and work toward each end. Deposit should extend 1-2 in. up edge. (NOTE: USE ONLY 1/8 IN. DIAMETER ELECTRODE.)

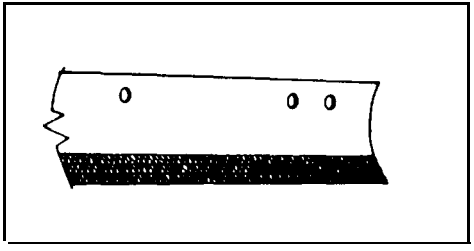

FIGURE 2-52. Hard-Facing Grader Blades

Grader End Bits

Carbon Steel

Primary Electrode: Page 1-26

Alternate Electrodes: Pages 1-25 or 1-22

Welding Procedures: Place grader end bit in flat position and apply beads diagonally across outer comer and along edges (Figure 2-53).

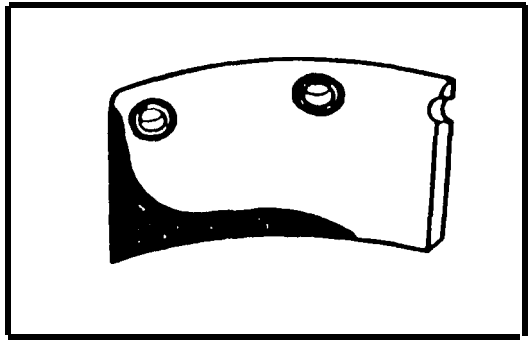

FIGURE 2-53. Hard-Facing Grader End Bits

Scooplift Buckets

Carbon Steel

Primary Electrode: Page l-26

Alternate Electrodes: Pages l-22 or l-20

Welding Procedures: Hard-face underside of lip (Figure 2-54). If bucket is badly worn, fabricate new lip and attach, using suitable electrodes.

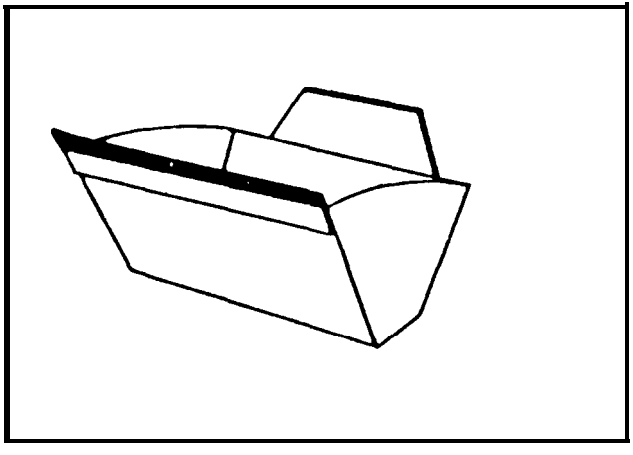

FIGURE 2-54. Hard-Facing Scooplift Bucket Lips

ASPHALT MIXERS AND PAVERS (Continued)

Grapple Tines

Carbon Steel

Primary Electrode: Page 1-26

Alternate Electrodes: Pages 1-25 or 1-22

Welding Procedures: Hard-face tine up about 10 in. from point with above-mentioned electrodes and deposit electrode from the point to about 4 in. up the tine (Figure 2-55).

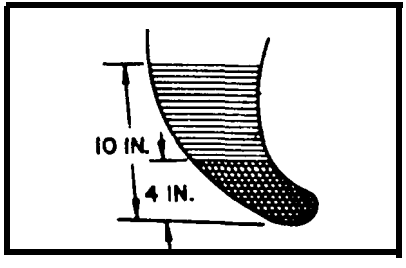

FIGURE 2-55. Hard-Facing Grapple Tines

Grid Compactors

Carbon Steel

Primary Electrode: Page 1-26

Alternate Electrodes: Pages 1-25 or 1-22

Welding Procedures: Raise compactor for downhand positioning. Hard-face grids (Figure 2-56).

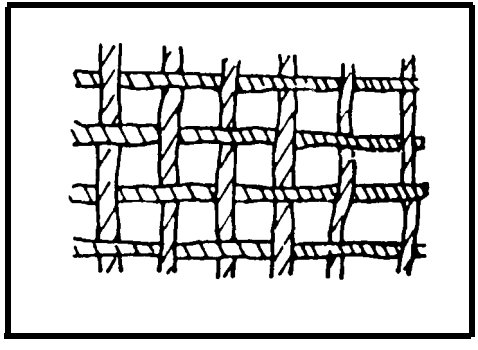

FIGURE 2-56. Hard-Facing Grid Compactor Grids

ASPHALT MIXERS AND PAVERS (Continued)

Sheepsfoot Tampers

Carbon Steel

Primary Electrode: Page l-26

Alternate Electrodes: Pages l-22 or l-20

Welding Procedures: Drive short lengths of old pipe to worn tamp. This can be done on round, square, or rectangular tamps. To prevent hard metal spill during hard-facing, seal the cup where it is joined to the tamp. Fill hole in ring with above-mentioned electrodes (Figure 2-57). Once welding begins, the operation should be continued until entire tamp is rebuilt.

For best service life, hard-face tamps when they are new, before putting them to work. Hard-face comers and edges with a single wash pass of electrodes on page 1-33, 1-32 or 1-29. Do not allow wear to progress more than 3/16 in. before rehard-facing.

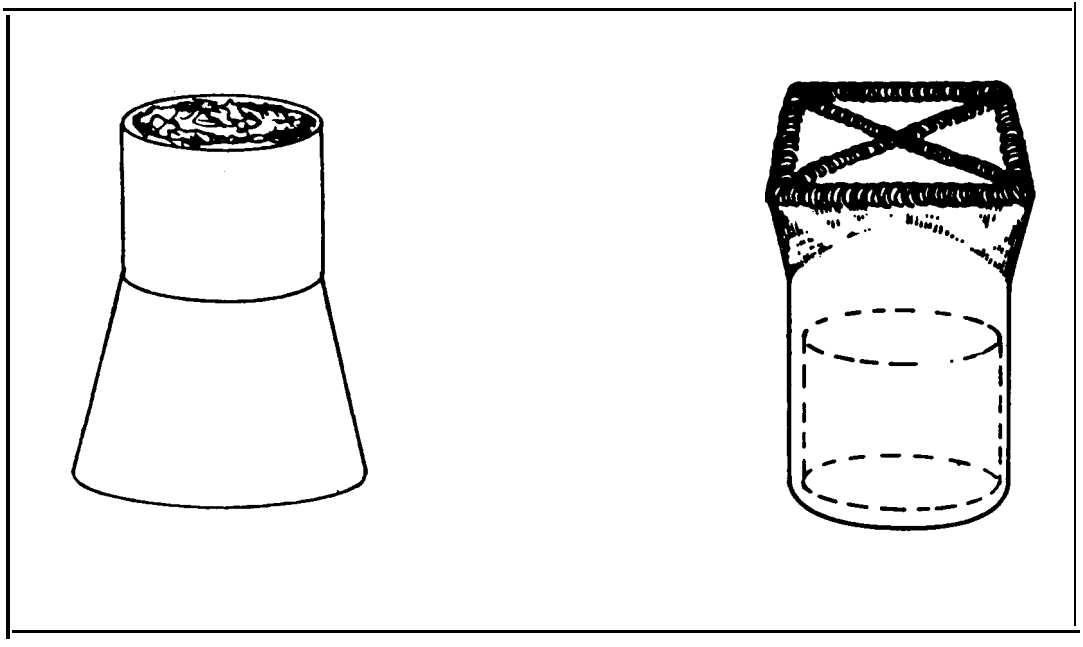

FIGURE 2-57. Hard-Facing Sheepsfoot Tampers

ASPHALT MIXERS AND PAVERS (Continued)

Curbing Machine Augers

Carbon Steel

Primary Electrode: Page 1-26

Alternate Electrodes: Pages 1-25 or 1-22

Welding Procedures: Hard-face flight faces, peripheries, and shaft with above-mentioned electrodes (Figure 2-58). Reapply hard-facing as necessary.

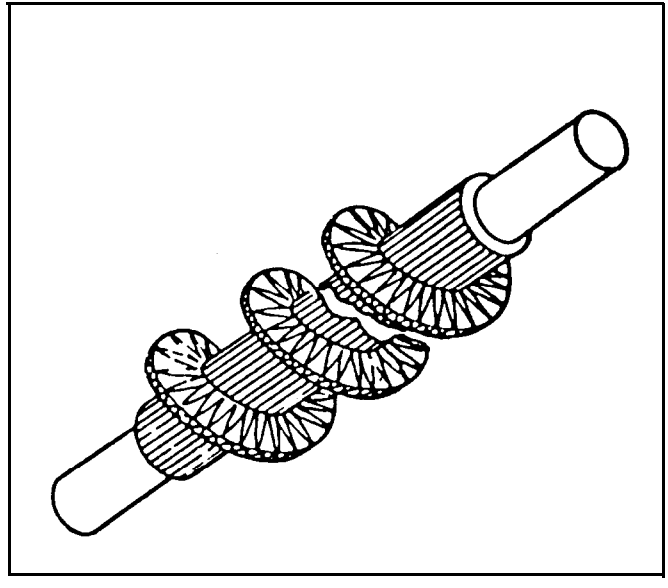

FIGURE 2-58. Hard-Facing Curbing Machine Augers

ASPHALT MIXERS AND PAVERS (Continued)

Backhoe Sidecutters

Carbon Steel

Primary Electrode: Page 1-26

Alternate Electrodes: Pages 1-25 or 1-22

Welding Procedures: Hard-face edge about 2 in. of front side of each sidecutter along edge, using above-mentioned electrodes (Figure 2-59). A perpetual self-sharpening action occurs as the unprotected bottom wears.

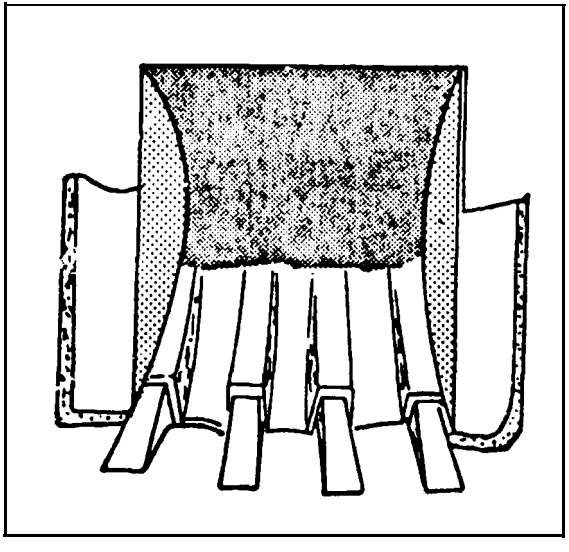

FIGURE 2-59. Hard-Facing Backhoe Sidecutters

ASPHALT MIXERS AND PAVERS (Continued)

Trencher Teeth

Carbon Steel

Primary Electrode: Page l-26

Alternate Electrodes: Pages l-25 or l-22

Welding Procedures: Hard-face edge and face of teeth, using above-mentioned electrodes (Figure 2-60).

Reapply hard-facing as necessary.

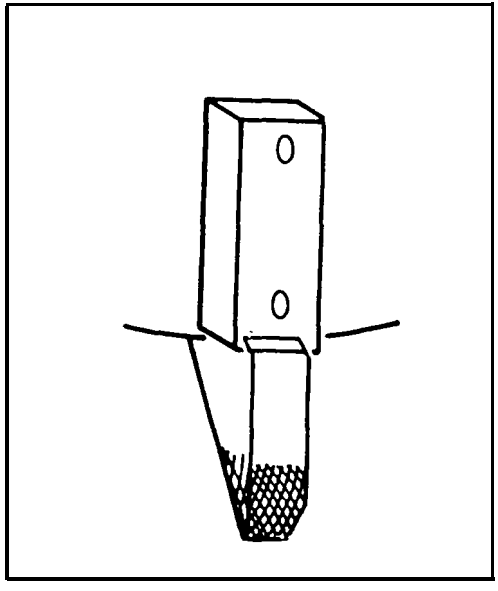

FIGURE 2-60. Hard-Facing Trencher Teeth

ASPHALT MIXERS AND PAVERS (Continued)

Shredding Hammers

Carbon Steel

Primary Electrode: Page 1-26

Alternate Electrodes: Pages 1-25 or 1-22

Welding Procedures: Hammers used to shred and blend top soil, clay, peat, humus compost and other abrasive materials should be hard-faced when they are new, using the above-mentioned electrodes. Apply hard metal to striking edge of hammer and lead edge of rotor plates (Figure 2-61).

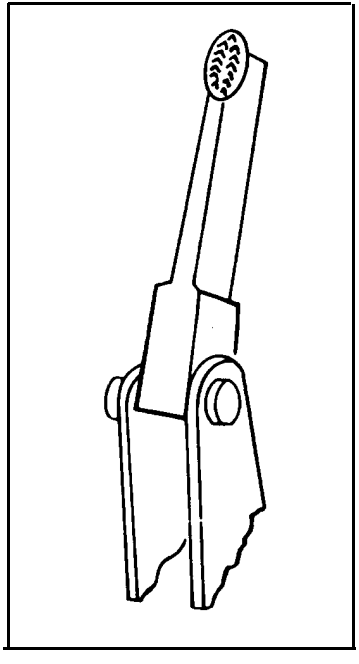

FIGURE 2-61. Hard-Facing Shedding Hammers

REBUILDING AND HARD-FACING CRUSHER ROLL SHELLS

Initial Rebuild and Hard-face of Shells

To relieve stress before hard-facing, new Manganese shells should be operated for a short period of time. After this brief initial period, during which wear should be limited to approximately 3/16 in., a regular schedule of roll upkeep should be established. If rolls are worn less than 3/1 6 in.. they can be hard-faced with recommended alloys. If excessive wear has occurred, the worn rolls must be rebuilt to size and contour before hard-facing. The amount of wear can be measured (Figure 2-62).

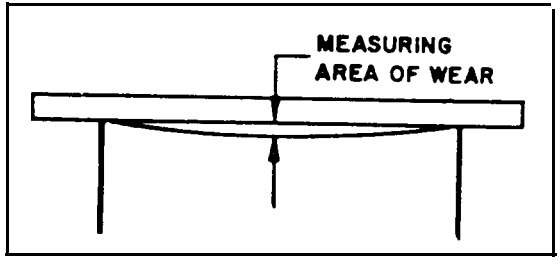

FIGURE 2-62. Wear Measurement of Crusher Roll Shells

General Recommendations

There are certain procedures that are common to roll rebuilding whether welding is done manually, semi-automatically or automatically; the success of the rebuilding and hard-facing operation is as dependent upon them as upon subsequent welding techniques.

REBUILDING AND HARD-FACING CRUSHER ROLL SHELLS (Continued)

1. Worn crusher shells should be cleaned to prevent arc interference, weld metal contamination, and possible porosity.

2. The ground should be made directly to the roll shell being welded to avoid arcing through the bearings. A rotating ground attached to the roll shaft end will provide a positive contact.

3. Cracks in the roll shell should be repaired before rebuilding. A chamfering rod can be used to gouge out any cracks down to sound metal. The crack should be filled with recommended alloys prior to rebuilding.

4. Where extensive welding is planned on one-piece shells, wedge bolts should be loosened before welding begins and retightened after the roll shell has cooled. This allows for expansion and contraction of the shell and reduces the possibility of cracking, breaking, or warping (Figure 2-63).

5. Roll shells must be kept round and both shells rebuilt to the same diameter. Out-of-round shells produce a variation in the crushing zone, resulting in unsatisfactory control of material size. In addition, unnecessary wear and strain are imposed on the bearings and shafts.

6. Weld beads are subjected to tension as they cool; to minimize surface checking or cracking, deposits are sometimes peened while hot to produce plastic flow and to change tension to compression.

7. Weld beads must not be deposited over the roll edge. Base metal cracking generally begins here. The beads should be started and stopped about 1 in. short of the roll edge (Figure 2-64), or at least far enough from the edge to allow sufficient clearance for cheek plates.

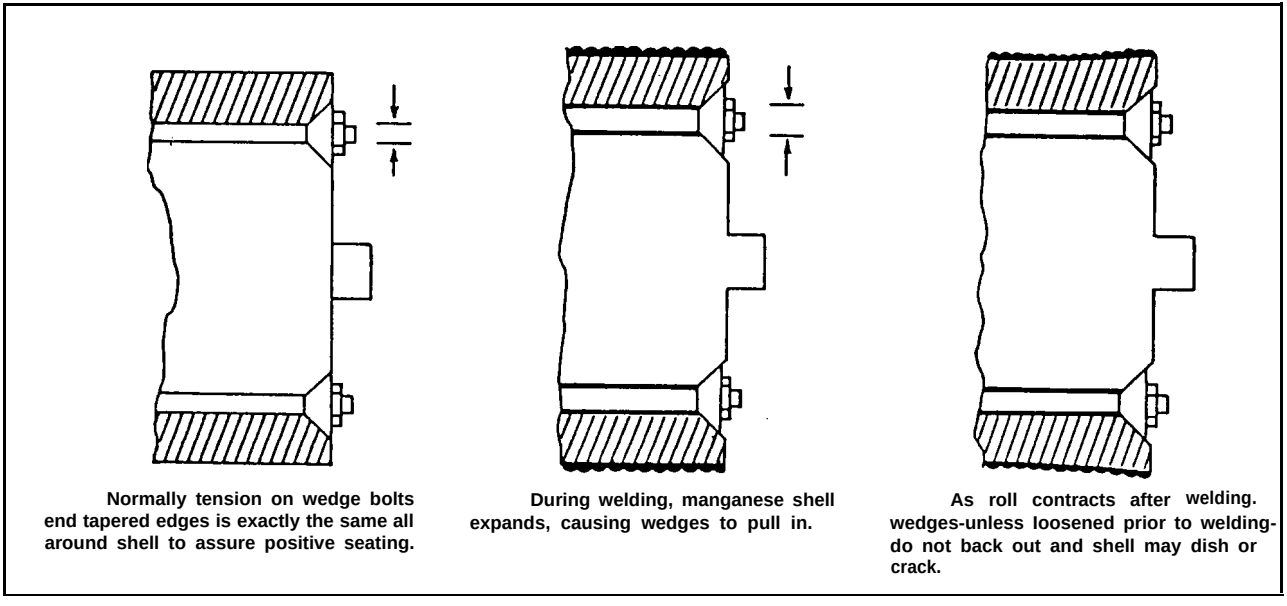

Normally tension on wedge bolts end tapered edges is exactly the same all around shell to assure positive seating.

During welding, manganese shell expands, causing wedges to pull in.

As roll contracts after welding. wedges-unless loosened prior to welding-do not back out and shell may dish or crack.

FIGURE 2-63. Preventing Warpage of Crusher Roll Shells

REBUILDING AND HARD-FACING CRUSHER ROLL SHELLS (Continued)

8. Correct amperage and stepover will insure proper bonding of weld bead to base metal. This is particularly true of high-alloy materials which, by nature, are very fluid.

   The proper combination of welding variables produces sound weld beads and provides maximum deposition rate (Figure 2-65).

9. The submerged arc process should not be used for rebuilding rolls; heat input can cause serious cracking and roll failure.

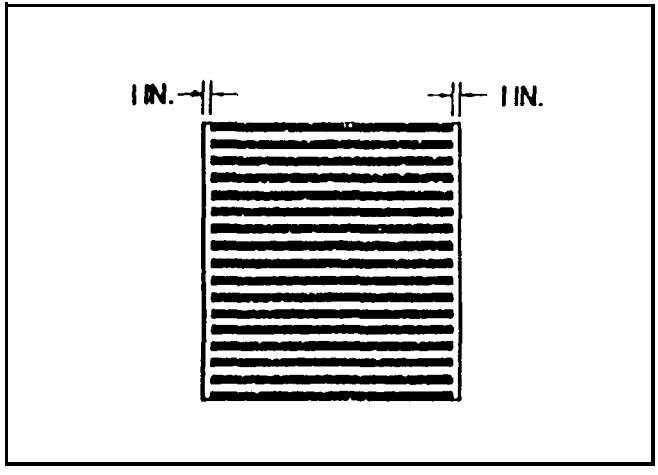

FIGURE 2-64. Welding Limits on Crusher Roll Shells

REBUILDING AND HARD-FACING CRUSHER ROLL SHELLS (Continued)

When to Reapply Hard-facing

Additional hard-facing should be applied after 70-80 percent of the previous overlay has worn away, but before the base metal is exposed. Hard-facing can be repeated several times, depending on how much of the previous overlay is allowed to wear away. Generally, wear is uneven and eventually excessively thick hard metal deposits on some areas of the roll may span. When this occurs the roll should be allowed to wear until all the hard metal is gone and the shell casting has been worn 1/8 - 3/16 in. The roll can then be restored to size with recommended buildup alloys. After rebuilding the shell should be overlaid with a wear-resistant alloy. If sufficient welding time is available, all striping should be reapplied.

If time is limited, apply only every second or third gripper bead. Do not apply more welding beads to one side or section of the roll than another. This will put the roll out of round, reduce sizing efficiency, and accelerate wear on other crusher components.

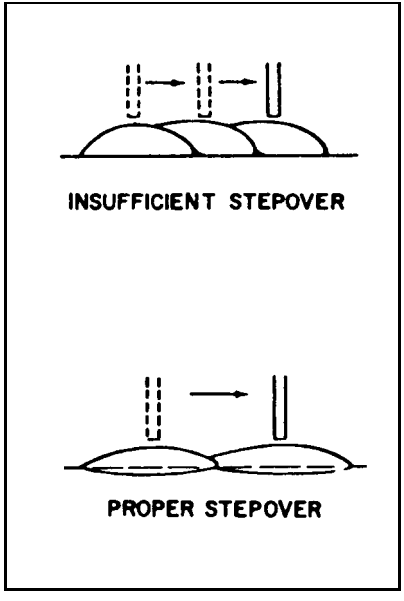

FIGURE 2-65. Insufficient and Proper Stepover Techniques Examples

REBUILDING AND HARD-FACING CRUSHER ROLL SHELLS (Continued)

Rebuilding Shells with the Manual Process

Always rebuild badly worn, dished rolls before hard-facing. On manganese castings, use electrodes on pages 1-22 or 1-20 with the manual process. (NOTE: NEVER USE MILD STEEL FOR REBUILDING ROLLS.)

Rebuilding Procedure

Using the skip weld process, apply transverse beads in the center section of the roll in the area of deepest wear.

Deposit three or four beads about 6 in. apart and turn the roll to a new position. Follow this pattern until weld beads are applied to the entire circumference of the roll. Continue the skip weld process until successive spaces between the original beads are gradually closed in and the entire center area of the roll is overlaid. See steps number 1 through 3 in Figure 2-66.

After the center section of this roll has been built up by this first layer, repeat the same procedure using transverse beads of longer length. See steps numbers 4 through 6 in Figure 2-66. Generally two layers are sufficient to restore roll size. If the shell is badly worn, apply additional layers. The rolls must be brought to size and correct contour before hard-facing.

A crescent weave bead of 1/2 - 3/4 in. maximum width will produce a sound deposit.

Hard-facing Crusher Shells with the Manual Process

Use electrode on page 1-25 to hard-face crusher shells. If a more abrasive resistance on the shell is desired, use electrode on page 1-26.

REBUILDING AND HARD-FACING CRUSHER ROLL SHELLS (Continued)

Welding Techniques

To assure efficient crushing, the hard metal overlay must not only be wear-resistant, it must also supply the necessary gripping action to sustain an adequate flow of material through the rolls. Maximum wear protection from any high-alloy, hard-facing overlay is provided by a two-layer deposit. DO NOT USE MORE THAN TWO LAYERS. Stacking layer upon layer will result in cracking and eventual spalling.

The best gripping and crushing action is determined by the arrangement of striping ribs on the roll face. The pattern used is determined by the type of material being crushed, the desired aggregate size, and the severity of abrasion.

One of the more popular methods of hard-facing is to cover the entire surface of the rebuilt roll shell with a single layer of hard metal, using the skip-weld procedure. After applying the first layer of hard metal, weld transverse beads of the same material across the crusher face 1-2 in. apart to provide gripping action (Figure 2-67).

Another hard-facing procedure particularly effective in crushing 3/4 in. or larger material incorporates the use of weave beads spaced 1/2 in. apart. Steps 1 through 4 (Figure 2-68) show method of application. Use the skip-weld process to stripe the center two-thirds of the roll face, first on wide spacing of about 6 in. apart, then gradually filling in areas between until the beads are no more than 1/2 in. apart.

Repeat the same procedure and skip-weld weave beads across the face of the shell directly over the first beads. Remember to start and stop welding short of the roll ends. This method of application deposits a double layer of hard metal on the center two-thirds of the roll shell, the area subjected to the most severe wear. It also results in a more uniform wear pattern across the entire roll shell surface.

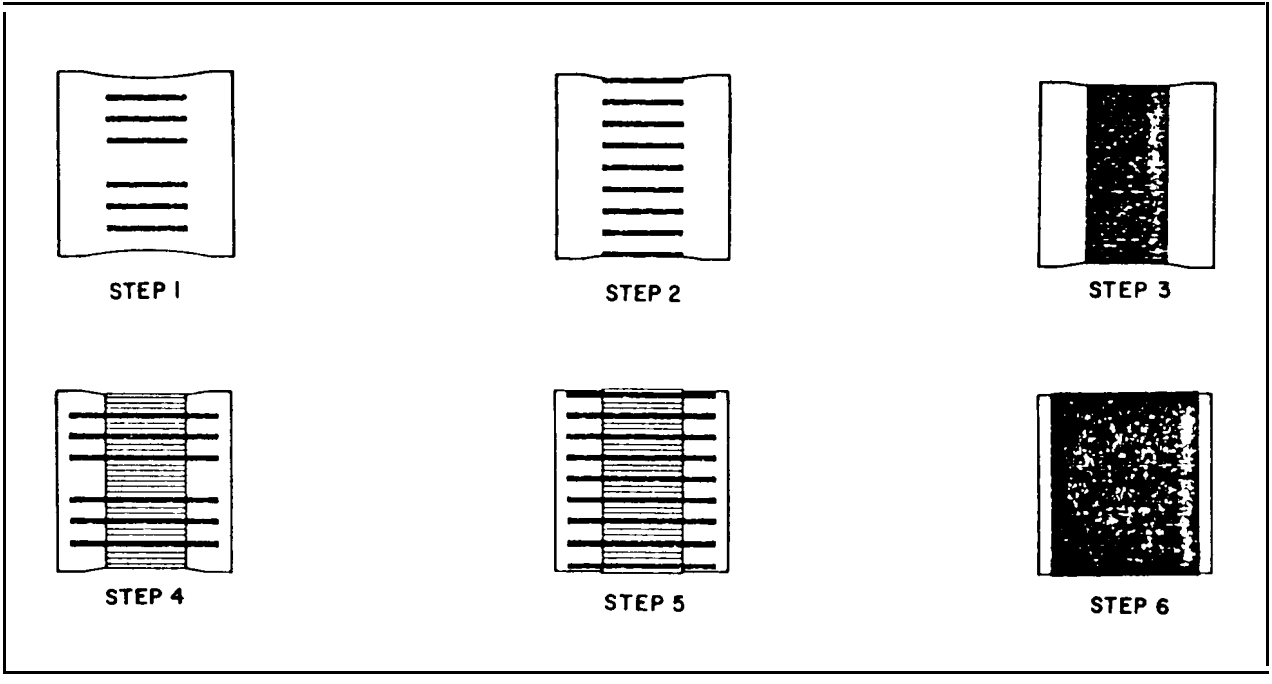

FIGURE 2-64. Rebuilding Procedure for Crusher Roll Shells

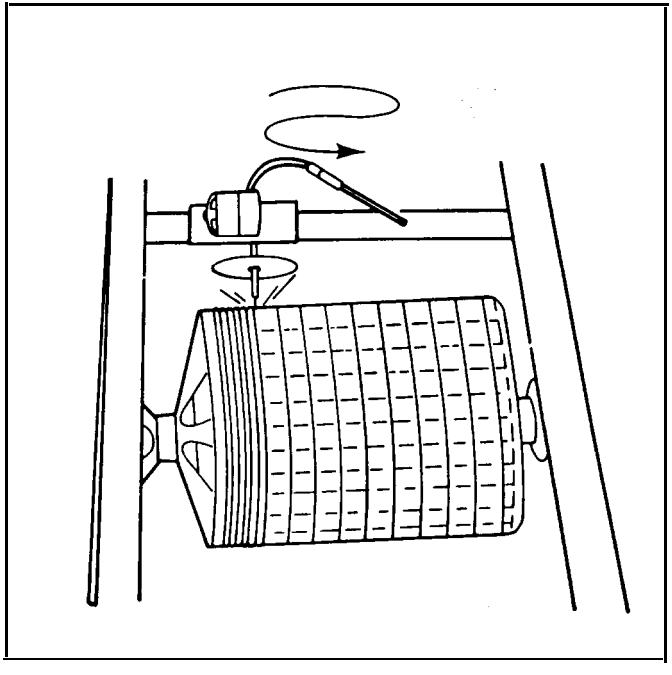

FIGURE 2-67. Hard-Facing Crusher Roll Shells

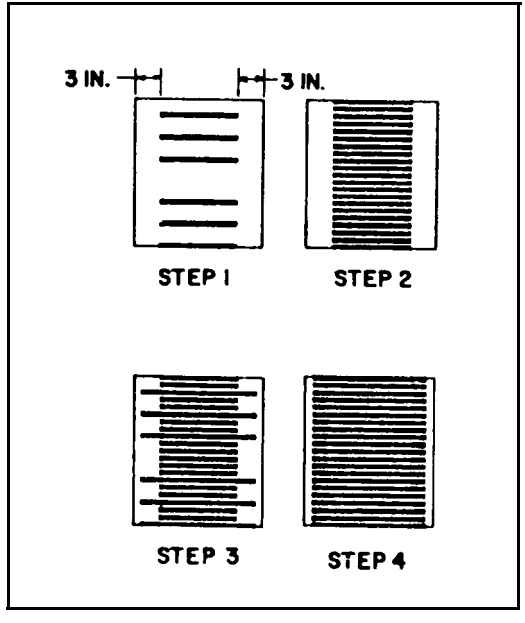

FIGURE 2-68. Crusher Roll Shell Rebuilding Technique

REBUILDING AND HARD-FACING CRUSHER ROLL SHELLS (Continued)

It is often desirable to stripe only one roll when extremely fine aggregate is being produced. A transverse deposit of hard metal is applied to the entire surface of the smooth roll, using welding procedure outlined in the section on roll rebuilding. The hard metal overlay should not be reapplied until most of the previous metal has worn off. Otherwise, severe cracking or spalling may occur.

How to Repair Cracked Manganese Rolls

The following procedures describe how to repair cracked manganese rolls (Figure 2-69).

1. Loosen all wedge bolts and wedges.

2. Vee out the crack to provide a 600 angle for welding. Remove all hard-facing adjacent to and back about 6 in. from the edges of the crack.

3. Weld heavy 4 in. angle iron 1 in. from, and parallel to, each side of the crack. Use electrode on page 1-27 to join angle iron to shell.

4. Drill or bum 1-1/8 in. holes in each angle iron on 6 in. centers to accommodate 1 in. bolts, Run bolts through angle irons and tighten nuts progressively to bring shell together.

5. Use electrodes on pages 1-22 or 1-20 to weld shell. Use weave or oscillating beads to work out all gas from molten puddle.

6. Scarf off angle iron and rehard-face where necessary.

7. Secure wedge bolts and wedges.

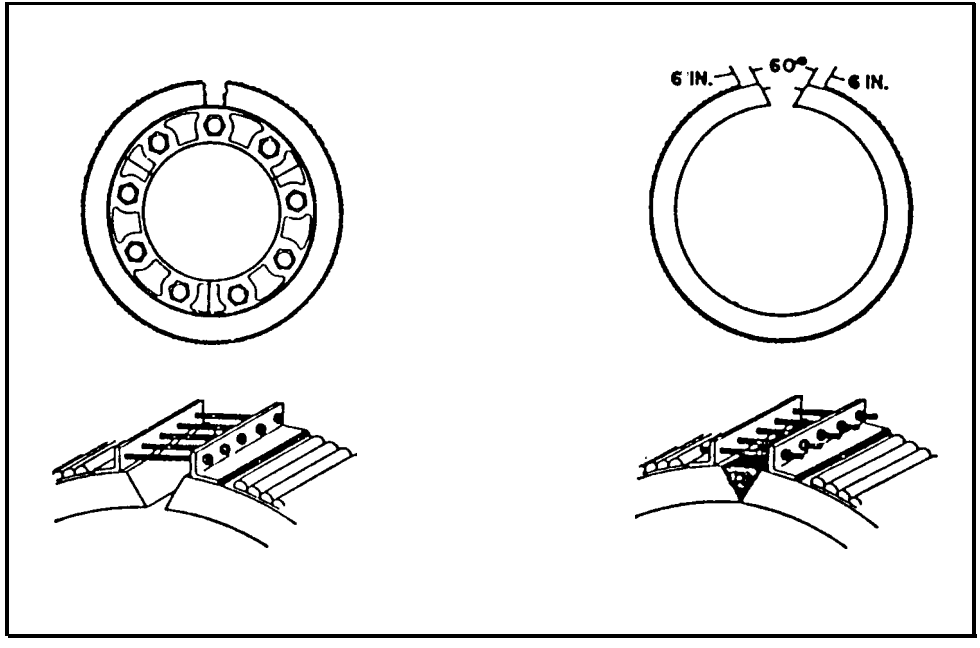

FIGURE 2-69. Repairing Cracked Manganese Crusher Rolls

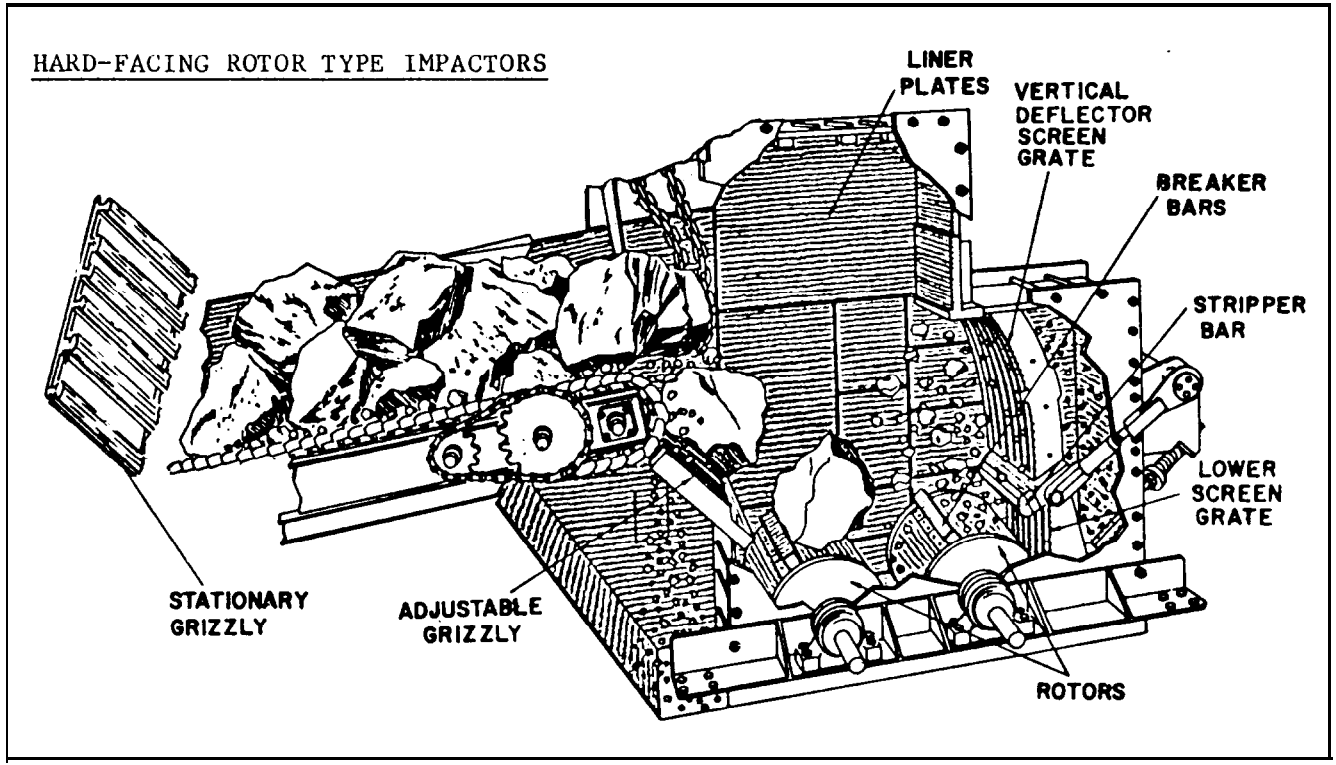

FIGURE 2-70. Hard-Facing Rotor-Type Impactors

HARD-FACING ROTOR TYPE IMPACTORS
(Continued)

Rotors and Bars

Manganese Steel

Primary Buildup Electrode: Page 1-22

Alternate Buildup Electrode: Page 1-20

Primary Hard-face Electrode: Page 1-26

Alternate Hard-face Electrodes: Pages 1-25 or 1-22

Welding Procedures: Rebuild dished rotors and bars with recommended buildup material; apply two layers of hard-facing alloy in stringer beads. When crushing materials that are extremely abrasive yet relatively easy to crumble, use electrodes on pages 1-26 or 1-25. When crushing tougher materials, and higher impact is involved, use electrodes on pages 1-25, 1-22, or 1-20.

Screen Grates

Manganese Steel

Primary Buildup Electrode: Page 1-22

Alternate Buildup Electrode: Page 1-20

Primary Hard-face Electrode: Page 1-26

Alternate Hard-face Electrodes: Pages 1-25 or 1-22

Welding Procedures: Rebuild badly worn grates with recommended buildup material and apply two layers of hard-facing alloy in transverse weld beads.

OTHER QUARRY AND MINING EQUIPMENT

Crusher Jaws

Crusher jaws are being rebuilt and hard-faced successfully, but they represent one of the most critical applications in the crushing industry and close adherence to welding procedures is a must.

CAUTION: Do not overheat jaws made of manganese (and almost all of them are). Prevent, or at least, minimize warpage.

Welding Procedures: Pre-bend the jaw in a heavy, tilting fixture fabricated of railroad rails or equivalent (Figure 2-7 1). Skip weld to avoid overheating; do not heat jaws above 5000 for prolonged periods. Tack short manganese bars to jaws using electrodes on pages 1-22 or 1-20, as shown in Step A of Figure 2-71. Complete fillet as shown in Step B. Buildup sides of corrugations using the above-mentioned electrodes and apply two layers of electrodes on pages 1-26, 1-25, or 1-22 to top of corrugations (Step C). Complete sides with hard-facing alloy (Step D). Welding on the reverse side of jaw will normally correct minor distortion caused by shrinkage.

If you overheat the jaw or allow it to warp too much, it must be heated, straightened, reheated, and quenched - uneconomical at best.

Wobbler Feeder

This rock feeding and scalping mechanism is subject to very high impact and severe abrasion. Use electrodes on pages 1-22, or 1-20 to restore worn areas (Figure 2-72).

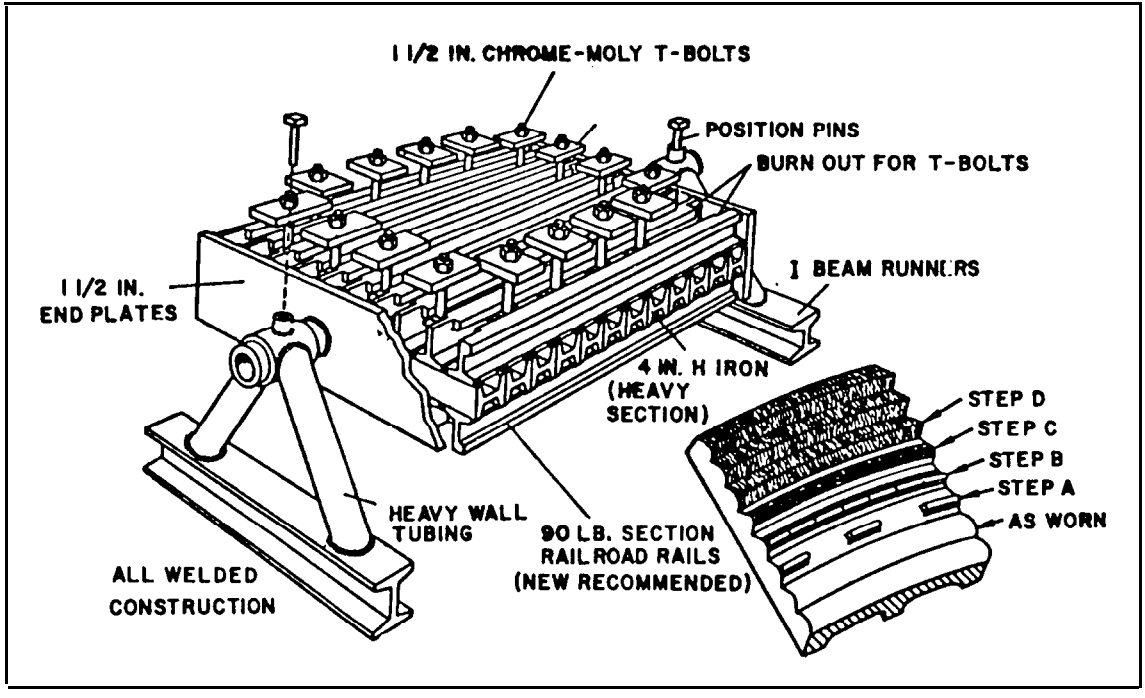

FIGURE 2-71. Rebuilding and Hard-Facing Crusher Jaws

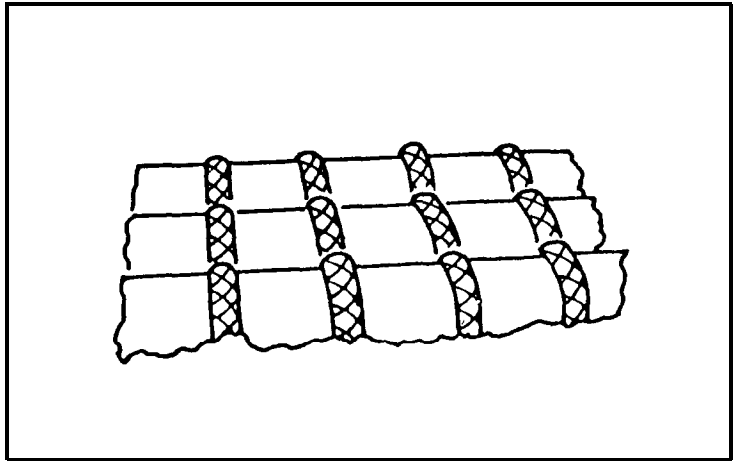

FIGURE 2-72. Restoring Worn Areas on Wobbler Feeders

Crusher Points

Rebuild points with electrodes on pages 1-22 or 1-20 and overlay using electrodes on pages 1-26, 1-25, or 1-22.

Scalping and Sizing Vibratory Screens

Bolt or clamp light screens to heavy plate to minimize distortion. Insert copper or carbon blocks of desired size into openings. Deposit electrodes on pages 1-22, or 1-20 around blocks. Overlay with electrodes on pages 1-26, 1-25, or 1-22 (Figure 2-73). Use same alloys on rails and screen surfaces on scalpers.

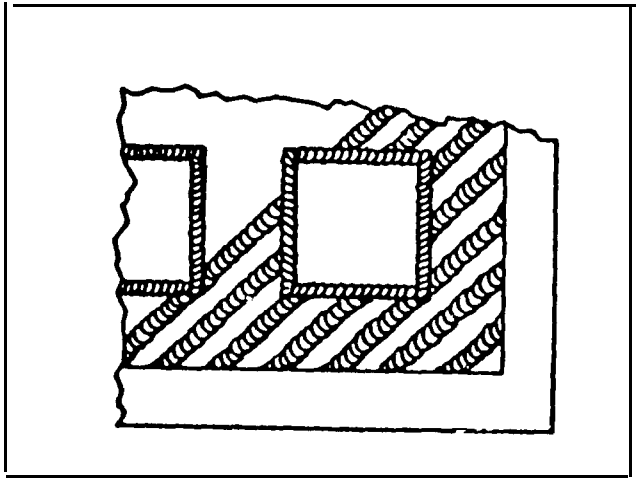

FIGURE 2-73. Hard-Facing, Scalping, and Sizing Vibratory Screens

Gravel Washer Auger Flights

Hard-face periphery and leading flight faces using electrodes on pages 1-26, 1-25, or 1-22 (Figure 2-74).

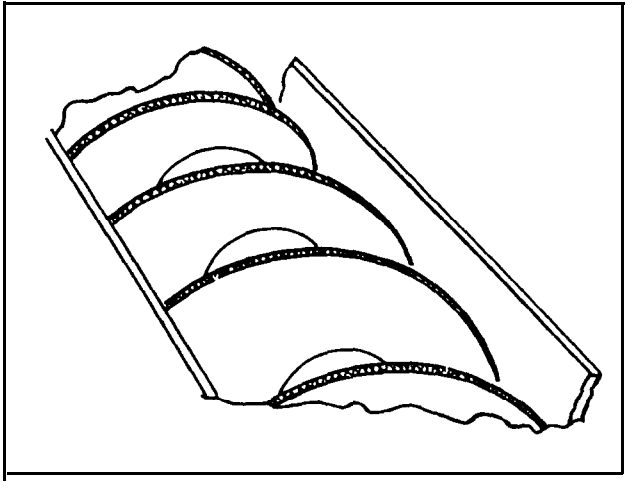

FIGURE 2-74. Hard-Facing Gravel Washer Auger Flight

OTHER QUARRY AND MINING EQUIPMENT
(Continued)

Log Washer Paddles

Clamp copper plates to worn paddle to form proper size (Figure 2-75). Weld-cast electrodes on pages 1-22 or 1-20 to within 1/4 in. of finished size. Overlay with electrodes on pages 1-26, 1-25, or 1-22.

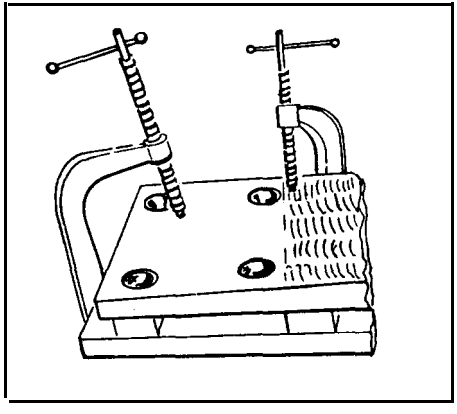

FIGURE 2-75. Hard-Facing Log Washer Paddles

Elevator Bucket Lips

Hard-face lips using electrodes on pages 1-26, 1-25, or 1-22 (Figure 2-76). If bucket is badly worn, fabricate new lips and attach with electrode on page 1-20 and hard-face. Hard-facing of cast iron bucket lips is not recommended.

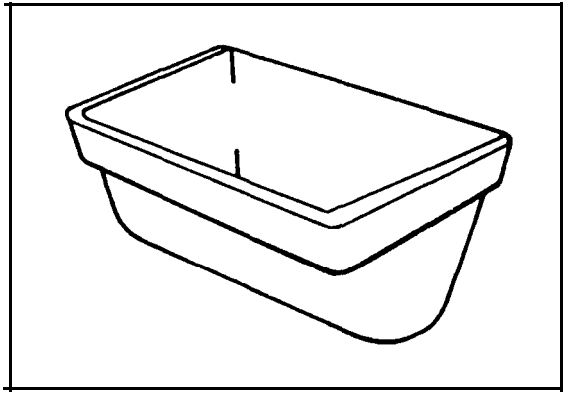

FIGURE 2-76. Hard-Facing Elevator Bucket Lips

OTHER QUARRY AND MINING EQUIPMENT
(Continued)

Quarry Drill Collars and Augers

Use electrodes on page 1-25 to hard-face flutes on drill collars. Use electrode on page 1-26 to hard-face periphery and leading flight face of drill augers (Figure

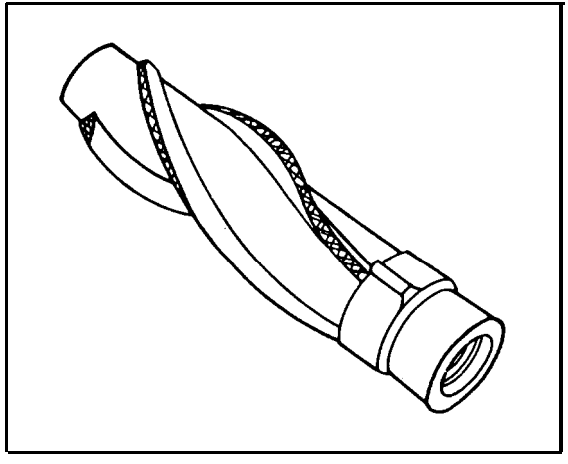

FIGURE 2-77. Hard-Facing Quarry Drill Collars and Augers