ELSEVIER

THIRD EDITION

PRESSURE VESSEL DESIGN MANUAL

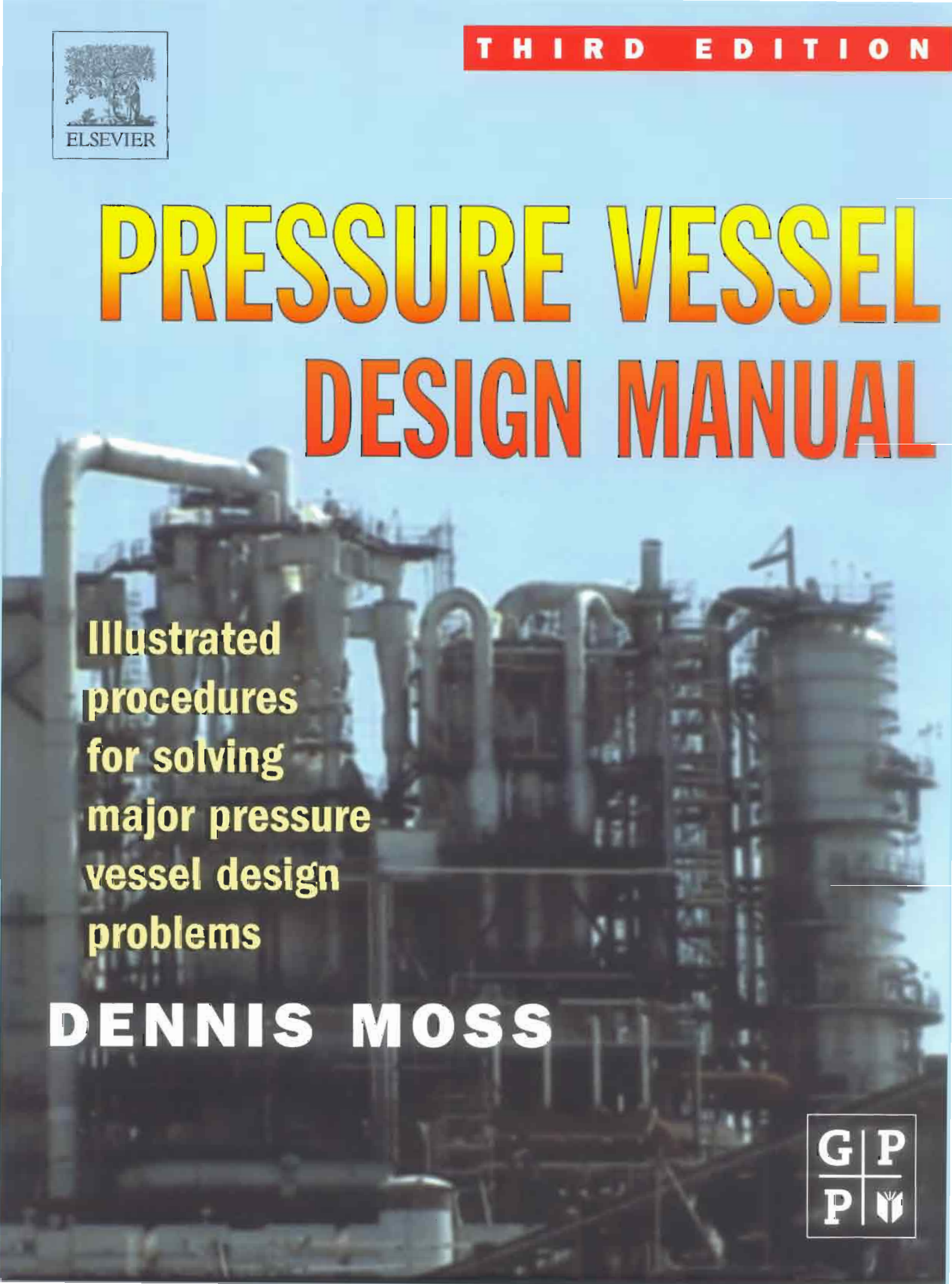

Illustrated procedures for solving major pressure vessel design problems

DENNIS MOSS

GPP

THIRD EDITION

PRESSURE VESSEL DESIGN MANUAL

THIRD EDITION

PRESSURE VESSEL DESIGN MANUAL

Illustrated procedures for solving major pressure vessel design problems

DENNIS R. MOSS

ELSEVIER

AMSTERDAM • BOSTON • HEIDELBERG
LONDON • NEW YORK • OXFORD • PARIS
SAN DIEGO • SAN FRANCISCO • SINGAPORE
SYDNEY • TOKYO

Gulf Professional Publishing is an imprint of Elsevier

G P
P
Gulf Professional Publishing

Gulf Professional Publishing is an imprint of Elsevier
200 Wheeler Road, Burlington, MA 01803, USA
Linacre House, Jordan Hill, Oxford OX2 8DP, UK

Copyright © 2004, Elsevier, Inc. All rights reserved

No part of this publication may be reproduced, stored in a retrieval system, or transmitted in any form or by any means, electronic, mechanical, photocopying, recording, or otherwise, without the prior written permission of the publisher.

Permissions may be sought directly from Elsevier's Science & Technology Rights Department in Oxford, UK: phone (+44) 1865 843830, fax: (+44) 1865 853333, e-mail: permissions@elsevier.com.uk. You may also complete your request online via the Elsevier Science homepage (http://elsevier.com), by selecting "Customer Support" and then "Obtaining Permissions."

Recognizing the importance of preserving what has been written, Elsevier prints its books on acid-free paper whenever possible.

Library of Congress Cataloging-in-Publication Data
Moss, Dennis R.
Pressure vessel design manual: illustrated procedures for solving major pressure vessel design problems/Dennis R. Moss.–3rd ed.
p. cm.
ISBN 0-7506-7740-6 (hardcover: alk. paper)
1. Pressure vessels–Design and construction–Handbooks, manuals, etc. I. Title.
TA660.T34M68 2003
681′.76041–dc22

2003022552

British Library Cataloguing-in-Publication Data
A catalogue record for this book is available from the British Library.

ISBN: 0-7506-7740-6

For information on all Gulf Professional Publishing
publications visit our website at www.gulfpp.com

04 05 06 07 08 10 11 9 8 7 6 5 4 3 2 1

Printed in the United States of America

Contents

PREFACE, ix

CHAPTER 1

STRESSES IN PRESSURE VESSELS, 1

Design Philosophy, 1
Stress Analysis, 1
Stress/Failure Theories, 2
Failures in Pressure Vessels, 5
Loadings, 6
Stress, 7
Special Problems, 10
References, 14

CHAPTER 2

GENERAL DESIGN, 15

Procedure 2-1: General Vessel Formulas, 15
Procedure 2-2: External Pressure Design, 19
Procedure 2-3: Calculate MAP, MAWP, and Test Pressures, 28
Procedure 2-4: Stresses in Heads Due to Internal Pressure, 30
Procedure 2-5: Design of Intermediate Heads, 31
Procedure 2-6: Design of Toriconical Transitions, 33
Procedure 2-7: Design of Flanges, 37
Procedure 2-8: Design of Spherically Dished Covers, 57
Procedure 2-9: Design of Blind Flanges with Openings, 58
Procedure 2-10: Bolt Torque Required for Sealing Flanges, 59
Procedure 2-11: Design of Flat Heads, 62
Procedure 2-12: Reinforcement for Studding Outlets, 68
Procedure 2-13: Design of Internal Support Beds, 69
Procedure 2-14: Nozzle Reinforcement, 74
Procedure 2-15: Design of Large Openings in Flat Heads, 78
Procedure 2-16: Find or Revise the Center of Gravity of a Vessel, 80
Procedure 2-17: Minimum Design Metal Temperature (MDMT), 81
Procedure 2-18: Buckling of Thin-Walled Cylindrical Shells, 85
Procedure 2-19: Optimum Vessel Proportions, 89
Procedure 2-20: Estimating Weights of Vessels and Vessel Components, 95
References, 106

CHAPTER 3

DESIGN OF VESSEL SUPPORTS, 109

Support Structures, 109
Procedure 3-1: Wind Design per ASCE, 112
Procedure 3-2: Wind Design per UBC-97, 118
Procedure 3-3: Seismic Design for Vessels, 120
Procedure 3-4: Seismic Design—Vessel on Unbraced Legs, 125
Procedure 3-5: Seismic Design—Vessel on Braced Legs, 132
Procedure 3-6: Seismic Design—Vessel on Rings, 140
Procedure 3-7: Seismic Design—Vessel on Lugs #1, 145
Procedure 3-8: Seismic Design—Vessel on Lugs #2, 151
Procedure 3-9: Seismic Design—Vessel on Skirt, 157
Procedure 3-10: Design of Horizontal Vessel on Saddles, 166
Procedure 3-11: Design of Saddle Supports for Large Vessels, 177
Procedure 3-12: Design of Base Plates for Legs, 184
Procedure 3-13: Design of Lug Supports, 188
Procedure 3-14: Design of Base Details for Vertical Vessels #1, 192
Procedure 3-15: Design of Base Details for Vertical Vessels #2, 200
References, 202

CHAPTER 4

SPECIAL DESIGNS, 203

Procedure 4-1: Design of Large-Diameter Nozzle Openings, 203
Procedure 4-2: Design of Cone–Cylinder Intersections, 208
Procedure 4-3: Stresses at Circumferential Ring Stiffeners, 216
Procedure 4-4: Tower Deflection, 219
Procedure 4-5: Design of Ring Girders, 222
Procedure 4-6: Design of Baffles, 227
Procedure 4-7: Design of Vessels with Refractory Linings, 237
Procedure 4-8: Vibration of Tall Towers and Stacks, 244
References, 254

CHAPTER 5

LOCAL LOADS, 255

Procedure 5-1: Stresses in Circular Rings, 256
Procedure 5-2: Design of Partial Ring Stiffeners, 265
Procedure 5-3: Attachment Parameters, 267
Procedure 5-4: Stresses in Cylindrical Shells from External Local Loads, 269
Procedure 5-5: Stresses in Spherical Shells from External Local Loads, 283
References, 290

CHAPTER 6

RELATED EQUIPMENT, 291

Procedure 6-1: Design of Davits, 291
Procedure 6-2: Design of Circular Platforms, 296

Procedure 6-3: Design of Square and Rectangular Platforms, 304
Procedure 6-4: Design of Pipe Supports, 309
Procedure 6-5: Shear Loads in Bolted Connections, 317
Procedure 6-6: Design of Bins and Elevated Tanks, 318
Procedure 6-7: Agitators/Mixers for Vessels and Tanks, 328
Procedure 6-8: Design of Pipe Coils for Heat Transfer, 335
Procedure 6-9: Field-Fabricated Spheres, 355
References, 364

CHAPTER 7

TRANSPORTATION AND ERECTION OF PRESSURE VESSELS, 365

Procedure 7-1: Transportation of Pressure Vessels, 365
Procedure 7-2: Erection of Pressure Vessels, 387
Procedure 7-3: Lifting Attachments and Terminology, 391
Procedure 7-4: Lifting Loads and Forces, 400
Procedure 7-5: Design of Tail Beams, Lugs, and Base Ring Details, 406
Procedure 7-6: Design of Top Head and Cone Lifting Lugs, 416
Procedure 7-7: Design of Flange Lugs, 420
Procedure 7-8: Design of Trunnions, 431
Procedure 7-9: Local Loads in Shell Due to Erection Forces, 434
Procedure 7-10: Miscellaneous, 437

APPENDICES, 443

Appendix A: Guide to ASME Section VIII, Division 1, 443
Appendix B: Design Data Sheet for Vessels, 444
Appendix C: Joint Efficiencies (ASME Code), 445
Appendix D: Properties of Heads, 447
Appendix E: Volumes and Surface Areas of Vessel Sections, 448
Appendix F: Vessel Nomenclature, 455
Appendix G: Useful Formulas for Vessels, 459
Appendix H: Material Selection Guide, 464
Appendix I: Summary of Requirements for 100% X-Ray and PWHT, 465
Appendix J: Material Properties, 466
Appendix K: Metric Conversions, 474
Appendix L: Allowable Compressive Stress for Columns, F_A, 475
Appendix M: Design of Flat Plates, 478
Appendix N: External Insulation for Vertical Vessels, 480
Appendix O: Flow over Weirs, 482
Appendix P: Time Required to Drain Vessels, 483
Appendix Q: Vessel Surge Capacities and Hold-Up Times, 485
Appendix R: Minor Defect Evaluation Procedure, 486
References, 487
Index, 489

Preface

Designers of pressure vessels and related equipment frequently have design information scattered among numerous books, periodicals, journals, and old notes. Then, when faced with a particular problem, they spend hours researching its solution only to discover the execution may have been rather simple. This book can eliminate those hours of research by providing a step-by-step approach to the problems most frequently encountered in the design of pressure vessels.

This book makes no claim to originality other than that of format. The material is organized in the most concise and functionally useful manner. Whenever possible, credit has been given to the original sources.

Although every effort has been made to obtain the most accurate data and solutions, it is the nature of engineering that certain simplifying assumptions be made. Solutions achieved should be viewed in this light, and where judgments are required, they should be made with due consideration.

Many experienced designers will have already performed many of the calculations outlined in this book, but will find the approach slightly different. All procedures have been developed and proven, using actual design problems. The procedures are easily repeatable to ensure consistency of execution. They also can be modified to incorporate changes in codes, standards, contracts, or local requirements. Everything required for the solution of an individual problem is contained in the procedure.

This book may be used directly to solve problems, as a guideline, as a logical approach to problems, or as a check to alternative design methods. If more detailed solutions are required, the approach shown can be amplified where required.

The user of this book should be advised that any code formulas or references should always be checked against the latest editions of codes, i.e., ASME Section VIII, Division 1, Uniform Building Code, and ASCE 7-95. These codes are continually updated and revised to incorporate the latest available data.

I am grateful to all those who have contributed information and advice to make this book possible, and invite any suggestions readers may make concerning corrections or additions.

Dennis R. Moss

Cover Photo: Photo courtesy of Irving Oil Ltd., Saint John, New Brunswick, Canada and Stone and Webster, Inc., A Shaw Group Company, Houston, Texas. The photo shows the Reactor-Regenerator Structure of the Converter Section of the RFCC (Resid Fluid Catalytic Cracking) Unit. This "world class" unit operates at the Irving Refinery Complex in Saint John, New Brunswick, Canada, and is a proprietary process of Stone and Webster.

1
Stresses in Pressure Vessels

DESIGN PHILOSOPHY

In general, pressure vessels designed in accordance with the ASME Code, Section VIII, Division 1, are designed by rules and do not require a detailed evaluation of all stresses. It is recognized that high localized and secondary bending stresses may exist but are allowed for by use of a higher safety factor and design rules for details. It is required, however, that all loadings (the forces applied to a vessel or its structural attachments) must be considered. (See Reference 1, Para. UG-22.)

While the Code gives formulas for thickness and stress of basic components, it is up to the designer to select appropriate analytical procedures for determining stress due to other loadings. The designer must also select the most probable combination of simultaneous loads for an economical and safe design.

The Code establishes allowable stresses by stating in Para. UG-23(c) that the maximum general primary membrane stress must be less than allowable stresses outlined in material sections. Further, it states that the maximum primary membrane stress *plus* primary bending stress may not exceed 1.5 times the allowable stress of the material sections. In other sections, specifically Paras. 1-5(e) and 2-8, higher allowable stresses are permitted if appropriate analysis is made. These higher allowable stresses clearly indicate that different stress levels for different stress categories are acceptable.

It is general practice when doing more detailed stress analysis to apply higher allowable stresses. In effect, the detailed evaluation of stresses permits substituting knowledge of localized stresses and the use of higher allowables in place of the larger factor of safety used by the Code. This higher safety factor really reflected lack of knowledge about actual stresses.

A calculated value of stress means little until it is associated with its location and distribution in the vessel and with the type of loading that produced it. Different types of stress have different degrees of significance.

The designer must familiarize himself with the various types of stress and loadings in order to accurately apply the results of analysis. The designer must also consider some adequate stress or failure theory in order to combine stresses and set allowable stress limits. It is against this failure mode that he must compare and interpret stress values, and define how the stresses in a component react and contribute to the strength of that part.

The following sections will provide the fundamental knowledge for applying the results of analysis. The topics covered in Chapter 1 form the basis by which the rest of the book is to be used. A section on special problems and considerations is included to alert the designer to more complex problems that exist.

STRESS ANALYSIS

Stress analysis is the determination of the relationship between external forces applied to a vessel and the corresponding stress. The emphasis of this book is not how to do stress analysis in particular, but rather how to analyze vessels and their component parts in an effort to arrive at an economical and safe design—the difference being that we analyze stresses where necessary to determine thickness of material and sizes of members. We are not so concerned with building mathematical models as with providing a step-by-step approach to the design of ASME Code vessels. It is not necessary to find every stress but rather to know the governing stresses and how they relate to the vessel or its respective parts, attachments, and supports.

The starting place for stress analysis is to determine all the design conditions for a given problem and then determine all the related external forces. We must then relate these external forces to the vessel parts which must resist them to find the corresponding stresses. By isolating the causes (loadings), the effects (stress) can be more accurately determined.

The designer must also be keenly aware of the types of loads and how they relate to the vessel as a whole. Are the

effects long or short term? Do they apply to a localized portion of the vessel or are they uniform throughout?

How these stresses are interpreted and combined, what significance they have to the overall safety of the vessel, and what allowable stresses are applied will be determined by three things:

1. The strength/failure theory utilized.
2. The types and categories of loadings.
3. The hazard the stress represents to the vessel.

Membrane Stress Analysis

Pressure vessels commonly have the form of spheres, cylinders, cones, ellipsoids, tori, or composites of these. When the thickness is small in comparison with other dimensions ($R_m/t > 10$), vessels are referred to as membranes and the associated stresses resulting from the contained pressure are called membrane stresses. These membrane stresses are average tension or compression stresses. They are assumed to be uniform across the vessel wall and act tangentially to its surface. The membrane or wall is assumed to offer no resistance to bending. When the wall offers resistance to bending, bending stresses occur in addition to membrane stresses.

In a vessel of complicated shape subjected to internal pressure, the simple membrane-stress concepts do not suffice to give an adequate idea of the true stress situation. The types of heads closing the vessel, effects of supports, variations in thickness and cross section, nozzles, external attachments, and overall bending due to weight, wind, and seismic activity all cause varying stress distributions in the vessel. Deviations from a true membrane shape set up bending in the vessel wall and cause the direct loading to vary from point to point. The direct loading is diverted from the more flexible to the more rigid portions of the vessel. This effect is called "stress redistribution."

In any pressure vessel subjected to internal or external pressure, stresses are set up in the shell wall. The state of stress is triaxial and the three principal stresses are:

σ_x = longitudinal/meridional stress
σ_ϕ = circumferential/latitudinal stress
σ_r = radial stress

In addition, there may be bending and shear stresses. The radial stress is a direct stress, which is a result of the pressure acting directly on the wall, and causes a compressive stress equal to the pressure. In thin-walled vessels this stress is so small compared to the other "principal" stresses that it is generally ignored. Thus we assume for purposes of analysis that the state of stress is biaxial. This greatly simplifies the method of combining stresses in comparison to triaxial stress states. For thickwalled vessels ($R_m/t < 10$), the radial stress cannot be ignored and formulas are quite different from those used in finding "membrane stresses" in thin shells.

Since ASME Code, Section VIII, Division 1, is basically for design by rules, a higher factor of safety is used to allow for the "unknown" stresses in the vessel. This higher safety factor, which allows for these unknown stresses, can impose a penalty on design but requires much less analysis. The design techniques outlined in this text are a compromise between finding all stresses and utilizing minimum code formulas. This additional knowledge of stresses warrants the use of higher allowable stresses in some cases, while meeting the requirements that all loadings be considered.

In conclusion, "membrane stress analysis" is not completely accurate but allows certain simplifying assumptions to be made while maintaining a fair degree of accuracy. The main simplifying assumptions are that the stress is biaxial and that the stresses are uniform across the shell wall. For thin-walled vessels these assumptions have proven themselves to be reliable. No vessel meets the criteria of being a true membrane, but we can use this tool with a reasonable degree of accuracy.

STRESS/FAILURE THEORIES

As stated previously, stresses are meaningless until compared to some stress/failure theory. The significance of a given stress must be related to its location in the vessel and its bearing on the ultimate failure of that vessel. Historically, various "theories" have been derived to combine and measure stresses against the potential failure mode. A number of stress theories, also called "yield criteria," are available for describing the effects of combined stresses. For purposes of this book, as these failure theories apply to pressure vessels, only two theories will be discussed. They are the "maximum stress theory" and the "maximum shear stress theory."

Maximum Stress Theory

This theory is the oldest, most widely used and simplest to apply. Both ASME Code, Section VIII, Division 1, and Section I use the maximum stress theory as a basis for design. This theory simply asserts that the breakdown of

material depends only on the numerical magnitude of the maximum principal or normal stress. Stresses in the other directions are disregarded. Only the maximum principal stress must be determined to apply this criterion. This theory is used for biaxial states of stress assumed in a thin-walled pressure vessel. As will be shown later it is unconservative in some instances and requires a higher safety factor for its use. While the maximum stress theory does accurately predict failure in brittle materials, it is not always accurate for ductile materials. Ductile materials often fail along lines 45° to the applied force by shearing, long before the tensile or compressive stresses are maximum.

This theory can be illustrated graphically for the four states of biaxial stress shown in Figure 1-1.

It can be seen that uniaxial tension or compression lies on the two axes. Inside the box (outer boundaries) is the elastic range of the material. Yielding is predicted for stress combinations by the outer line.

Maximum Shear Stress Theory

This theory asserts that the breakdown of material depends only on the maximum shear stress attained in an element. It assumes that yielding starts in planes of maximum shear stress. According to this theory, yielding will start at a point when the maximum shear stress at that point reaches one-half of the the uniaxial yield strength, F_y. Thus for a biaxial state of stress where $\sigma_1 > \sigma_2$, the maximum shear stress will be $(\sigma_1 - \sigma_2)/2$.

Yielding will occur when

$$\frac{\sigma_1 - \sigma_2}{2} = \frac{F_y}{2}$$

Both ASME Code, Section VIII, Division 2 and ASME Code, Section III, utilize the maximum shear stress criterion. This theory closely approximates experimental results and is also easy to use. This theory also applies to triaxial states of stress. In a triaxial stress state, this theory predicts that yielding will occur whenever one-half the algebraic difference between the maximum and minimum stress is equal to one-half the yield stress. Where $\sigma_1 > \sigma_2 > \sigma_3$, the maximum shear stress is $(\sigma_1 - \sigma_3)/2$.

Yielding will begin when

$$\frac{\sigma_1 - \sigma_3}{2} = \frac{F_y}{2}$$

This theory is illustrated graphically for the four states of biaxial stress in Figure I-2.

A comparison of Figure 1-1 and Figure I-2 will quickly illustrate the major differences between the two theories. Figure 1-2 predicts yielding at earlier points in Quadrants II and IV. For example, consider point B of Figure I-2. It shows $\sigma_2 = (-)\sigma_1$; therefore the shear stress is equal to $\sigma_2 - (-\sigma_1)/2$, which equals $\sigma_2 + \sigma_1/2$ or one-half the stress

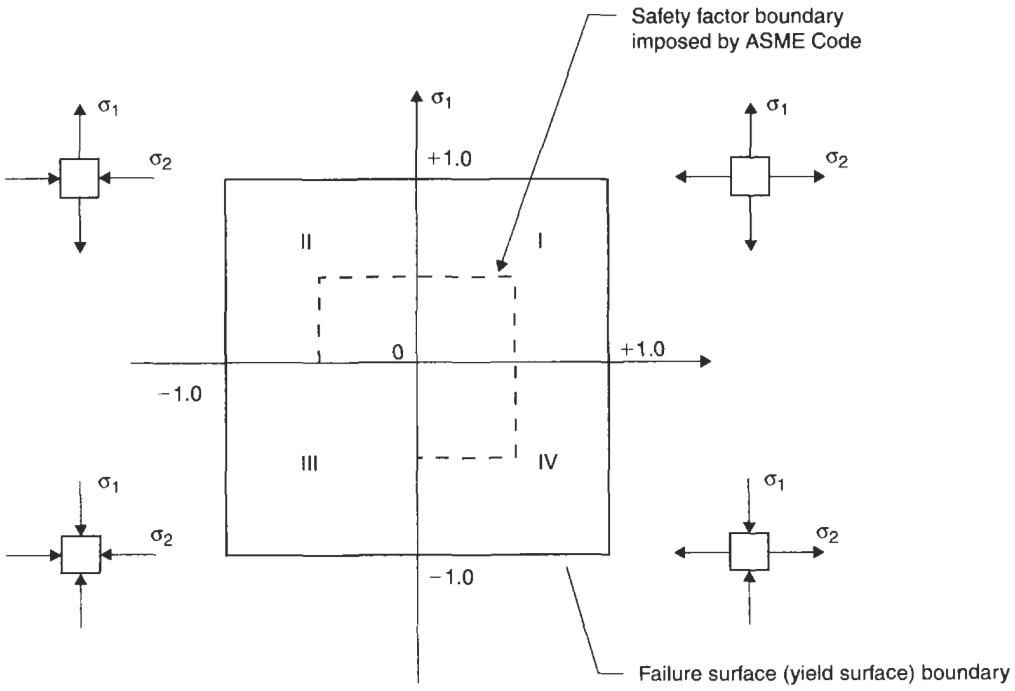

Figure 1-1. Graph of maximum stress theory. Quadrant I: biaxial tension; Quadrant II: tension; Quadrant III: biaxial compression; Quadrant IV: compression.

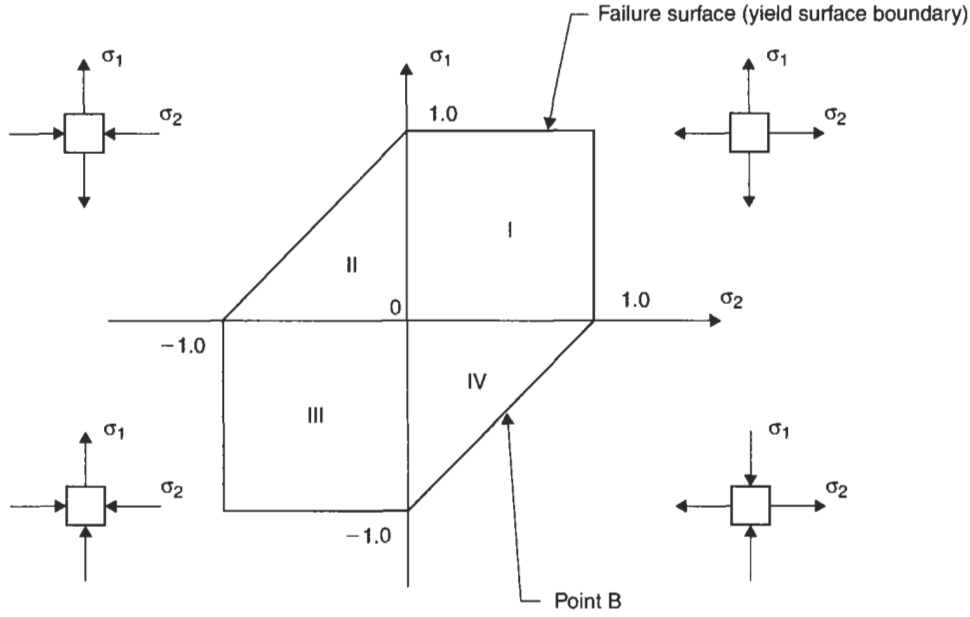

Figure 1-2. Graph of maximum shear stress theory.

which would cause yielding as predicted by the maximum stress theory!

Comparison of the Two Theories

Both theories are in agreement for uniaxial stress or when one of the principal stresses is large in comparison to the others. The discrepancy between the theories is greatest when both principal stresses are numerically equal.

For simple analysis upon which the thickness formulas for ASME Code, Section I or Section VIII, Division 1, are based, it makes little difference whether the maximum stress theory or maximum shear stress theory is used. For example, according to the maximum stress theory, the controlling stress governing the thickness of a cylinder is σ_ϕ, circumferential stress, since it is the largest of the three principal stresses. According to the maximum shear stress theory, the controlling stress would be one-half the algebraic difference between the maximum and minimum stress:

- The maximum stress is the circumferential stress, σ_ϕ

  $\sigma_\phi = PR/t$

- The minimum stress is the radial stress, σ_r

  $\sigma_r = -P$

Therefore, the maximum shear stress is:

$$\frac{\sigma_\phi - \sigma_r}{2}$$

ASME Code, Section VIII, Division 2, and Section III use the term "stress intensity," which is defined as twice the maximum shear stress. Since the shear stress is compared to one-half the yield stress only, "stress intensity" is used for comparison to allowable stresses or ultimate stresses. To define it another way, yielding begins when the "stress intensity" exceeds the yield strength of the material.

In the preceding example, the "stress intensity" would be equal to $\sigma_\phi - \sigma_r$. And

$$\sigma_\phi - \sigma_r = PR/t - (-P) = PR/t + P$$

For a cylinder where P = 300 psi, R = 30 in., and t = .5 in., the two theories would compare as follows:

- *Maximum stress theory*

  $\sigma = \sigma_\phi = PR/t = 300(30)/.5 = 18{,}000$ psi

- *Maximum shear stress theory*

  $\sigma = PR/t + P = 300(30)/.5 + 300 = 18{,}300$ psi

Two points are obvious from the foregoing:

1. For thin-walled pressure vessels, both theories yield approximately the same results.
2. For thin-walled pressure vessels the radial stress is so small in comparison to the other principal stresses that it can be ignored and a state of biaxial stress is assumed to exist.

For thick-walled vessels ($R_m/t < 10$), the radial stress becomes significant in defining the ultimate failure of the vessel. The maximum stress theory is unconservative for designing these vessels. For this reason, this text has limited its application to thin-walled vessels where a biaxial state of stress is assumed to exist.

FAILURES IN PRESSURE VESSELS

Vessel failures can be grouped into four major categories, which describe *why* a vessel failure occurs. Failures can also be grouped into types of failures, which describe *how* the failure occurs. Each failure has a why and how to its history. It may have failed *through* corrosion fatigue *because* the wrong material was selected! The designer must be as familiar with categories and types of failure as with categories and types of stress and loadings. Ultimately they are all related.

Categories of Failures

1. *Material*—Improper selection of material; defects in material.
2. *Design*—Incorrect design data; inaccurate or incorrect design methods; inadequate shop testing.
3. *Fabrication*—Poor quality control; improper or insufficient fabrication procedures including welding; heat treatment or forming methods.
4. *Service*—Change of service condition by the user; inexperienced operations or maintenance personnel; upset conditions. Some types of service which require special attention both for selection of material, design details, and fabrication methods are as follows:
   a. Lethal
   b. Fatigue (cyclic)
   c. Brittle (low temperature)
   d. High temperature
   e. High shock or vibration
   f. Vessel contents
      - Hydrogen
      - Ammonia
      - Compressed air
      - Caustic
      - Chlorides

Types of Failures

1. *Elastic deformation*—Elastic instability or elastic buckling, vessel geometry, and stiffness as well as properties of materials are protection against buckling.
2. *Brittle fracture*—Can occur at low or intermediate temperatures. Brittle fractures have occurred in vessels made of low carbon steel in the 40°–50°F range during hydrotest where minor flaws exist.
3. *Excessive plastic deformation*—The primary and secondary stress limits as outlined in ASME Section VIII, Division 2, are intended to prevent excessive plastic deformation and incremental collapse.
4. *Stress rupture*—Creep deformation as a result of fatigue or cyclic loading, i.e., progressive fracture. Creep is a time-dependent phenomenon, whereas fatigue is a cycle-dependent phenomenon.
5. *Plastic instability*—Incremental collapse; incremental collapse is cyclic strain accumulation or cumulative cyclic deformation. Cumulative damage leads to instability of vessel by plastic deformation.
6. *High strain*—Low cycle fatigue is strain-governed and occurs mainly in lower-strength/high-ductile materials.
7. *Stress corrosion*—It is well known that chlorides cause stress corrosion cracking in stainless steels; likewise caustic service can cause stress corrosion cracking in carbon steels. Material selection is critical in these services.
8. *Corrosion fatigue*—Occurs when corrosive and fatigue effects occur simultaneously. Corrosion can reduce fatigue life by pitting the surface and propagating cracks. Material selection and fatigue properties are the major considerations.

In dealing with these various modes of failure, the designer must have at his disposal a picture of the state of stress in the various parts. It is against these failure modes that the designer must compare and interpret stress values. But setting allowable stresses is not enough! For elastic instability one must consider geometry, stiffness, and the properties of the material. Material selection is a major consideration when related to the type of service. Design details and fabrication methods are as important as "allowable stress" in design of vessels for cyclic service. The designer and all those persons who ultimately affect the design must have a clear picture of the conditions under which the vessel will operate.

LOADINGS

Loadings or forces are the "causes" of stresses in pressure vessels. These forces and moments must be isolated both to determine *where* they apply to the vessel and *when* they apply to a vessel. Categories of loadings define where these forces are applied. Loadings may be applied over a large portion (general area) of the vessel or over a local area of the vessel. Remember both *general* and *local* loads can produce membrane and bending stresses. These stresses are additive and define the overall state of stress in the vessel or component. Stresses from local loads must be added to stresses from general loadings. These combined stresses are then compared to an allowable stress.

Consider a pressurized, vertical vessel bending due to wind, which has an inward radial force applied locally. The effects of the pressure loading are longitudinal and circumferential tension. The effects of the wind loading are longitudinal tension on the windward side and longitudinal compression on the leeward side. The effects of the local inward radial load are some local membrane stresses and local bending stresses. The local stresses would be both circumferential and longitudinal, tension on the inside surface of the vessel, and compressive on the outside. Of course the steel at any given point only sees a certain level of stress or the combined effect. It is the designer's job to combine the stresses from the various loadings to arrive at the worst probable combination of stresses, combine them using some failure theory, and compare the results to an acceptable stress level to obtain an economical and safe design.

This hypothetical problem serves to illustrate how categories and types of loadings are related to the stresses they produce. The stresses applied more or less *continuously* and *uniformly* across an entire section of the vessel are primary stresses.

The stresses due to pressure and wind are primary membrane stresses. These stresses should be limited to the code allowable. These stresses would cause the bursting or collapse of the vessel if allowed to reach an unacceptably high level.

On the other hand, the stresses from the inward radial load could be either a primary local stress or secondary stress. It is a primary local stress if it is produced from an unrelenting load or a secondary stress if produced by a relenting load. Either stress may cause local deformation but will not in and of itself cause the vessel to fail. If it is a primary stress, the stress will be redistributed; if it is a secondary stress, the load will relax once slight deformation occurs.

Also be aware that this is only true for ductile materials. In brittle materials, there would be no difference between primary and secondary stresses. If the material cannot yield to reduce the load, then the definition of secondary stress does not apply! Fortunately current pressure vessel codes require the use of ductile materials.

This should make it obvious that the type and category of loading will determine the type and category of stress. This will be expanded upon later, but basically each combination of stresses (stress categories) will have different allowables, i.e.:

- Primary stress: $P_m < SE$
- Primary membrane local (P_L):

$$P_L = P_m + P_L < 1.5\ SE$$
$$P_L = P_m + Q_m < 1.5\ SE$$

- Primary membrane + secondary (Q):

$$P_m + Q < 3\ SE$$

But what if the loading was of relatively short duration? This describes the "type" of loading. Whether a loading is steady, more or less continuous, or nonsteady, variable, or temporary will also have an effect on what level of stress will be acceptable. If in our hypothetical problem the loading had been pressure + seismic + local load, we would have a different case. Due to the relatively short duration of seismic loading, a higher "temporary" allowable stress would be acceptable. The vessel doesn't have to operate in an earthquake all the time. On the other hand, it also shouldn't fall down in the event of an earthquake! Structural designs allow a one-third increase in allowable stress for seismic loadings for this reason.

For *steady loads*, the vessel must support these loads more or less continuously during its useful life. As a result, the stresses produced from these loads must be maintained to an acceptable level.

For *nonsteady loads*, the vessel may experience some or all of these loadings at various times but not all at once and not more or less continuously. Therefore a temporarily higher stress is acceptable.

For *general loads* that apply more or less uniformly across an entire section, the corresponding stresses must be lower, since the entire vessel must support that loading.

For *local loads*, the corresponding stresses are confined to a small portion of the vessel and normally fall off rapidly in distance from the applied load. As discussed previously, pressurizing a vessel causes bending in certain components. But it doesn't cause the entire vessel to bend. The results are not as significant (except in cyclic service) as those caused by general loadings. Therefore a slightly higher allowable stress would be in order.

Loadings can be outlined as follows:

A. *Categories of loadings*
   1. *General loads*—Applied more or less continuously across a vessel section.
      a. Pressure loads—Internal or external pressure (design, operating, hydrotest, and hydrostatic head of liquid).
      b. Moment loads—Due to wind, seismic, erection, transportation.
      c. Compressive/tensile loads—Due to dead weight, installed equipment, ladders, platforms, piping, and vessel contents.
      d. Thermal loads—Hot box design of skirthead attachment.
   2. *Local loads*—Due to reactions from supports, internals, attached piping, attached equipment, i.e., platforms, mixers, etc.
      a. Radial load—Inward or outward.
      b. Shear load—Longitudinal or circumferential.
      c. Torsional load.
      d. Tangential load.
      e. Moment load—Longitudinal or circumferential.
      f. Thermal load.

B. *Types of loadings*
   1. *Steady loads*—Long-term duration, continuous.
      a. Internal/external pressure.
      b. Dead weight.
      c. Vessel contents.
      d. Loadings due to attached piping and equipment.
      e. Loadings to and from vessel supports.
      f. Thermal loads.
      g. Wind loads.
   2. *Nonsteady loads*—Short-term duration; variable.
      a. Shop and field hydrotests.
      b. Earthquake.
      c. Erection.
      d. Transportation.
      e. Upset, emergency.
      f. Thermal loads.
      g. Start up, shut down.

STRESS

ASME Code, Section VIII, Division 1 vs. Division 2

ASME Code, Section VIII, Division 1 does not explicitly consider the effects of combined stress. Neither does it give detailed methods on how stresses are combined. ASME Code, Section VIII, Division 2, on the other hand, provides specific guidelines for stresses, how they are combined, and allowable stresses for categories of combined stresses. Division 2 is design by analysis whereas Division 1 is design by rules. Although stress analysis as utilized by Division 2 is beyond the scope of this text, the use of stress categories, definitions of stress, and allowable stresses is applicable.

Division 2 stress analysis considers all stresses in a triaxial state combined in accordance with the maximum shear stress theory. Division 1 and the procedures outlined in this book consider a biaxial state of stress combined in accordance with the maximum stress theory. Just as you would not design a nuclear reactor to the rules of Division 1, you would not design an air receiver by the techniques of Division 2. Each has its place and applications. The following discussion on categories of stress and allowables will utilize information from Division 2, which can be applied in general to all vessels.

Types, Classes, and Categories of Stress

The shell thickness as computed by Code formulas for internal or external pressure alone is often not sufficient to withstand the combined effects of all other loadings. Detailed calculations consider the effects of each loading separately and then must be combined to give the total state of stress in that part. The stresses that are present in pressure vessels are separated into various *classes* in accordance with the *types* of loads that produced them, and the hazard they represent to the vessel. Each class of stress must be maintained at an acceptable level and the combined total stress must be kept at another acceptable level. The combined stresses due to a combination of loads acting simultaneously are called stress categories. Please note that this terminology differs from that given in Division 2, but is clearer for the purposes intended here.

Classes of stress, categories of stress, and allowable stresses are based on the type of loading that produced them *and* on the hazard they represent to the structure. Unrelenting loads produce primary stresses. Relenting loads (self-limiting) produce secondary stresses. General loadings produce primary membrane and bending stresses. Local loads produce local membrane and bending stresses. Primary stresses must be kept lower than secondary stresses.

Primary plus secondary stresses are allowed to be higher and so on. Before considering the combination of stresses (categories), we must first define the various *types* and *classes* of stress.

Types of Stress

There are many names to describe types of stress. Enough in fact to provide a confusing picture even to the experienced designer. As these stresses apply to pressure vessels, we group all types of stress into three major classes of stress, and subdivision of each of the groups is arranged according to their effect on the vessel. The following list of stresses describes types of stress without regard to their effect on the vessel or component. They define a direction of stress or relate to the application of the load.

1. Tensile
2. Compressive
3. Shear
4. Bending
5. Bearing
6. Axial
7. Discontinuity
8. Membrane
9. Principal
10. Thermal
11. Tangential
12. Load induced
13. Strain induced
14. Circumferential
15. Longitudinal
16. Radial
17. Normal

Classes of Stress

The foregoing list provides examples of types of stress. It is, however, too general to provide a basis with which to combine stresses or apply allowable stresses. For this purpose, new groupings called *classes* of stress must be used. Classes of stress are defined by the type of loading which produces them and the hazard they represent to the vessel.

1. *Primary stress*
   a. General:
      - Primary general membrane stress, P_m
      - Primary general bending stress, P_b
   b. Primary local stress, P_L
2. *Secondary stress*
   a. Secondary membrane stress, Q_m
   b. Secondary bending stress, Q_b
3. *Peak stress, F*

Definitions and examples of these stresses follow.

Primary general stress. These stresses act over a full cross section of the vessel. They are produced by mechanical loads (load induced) and are the most hazardous of all types of stress. The basic characteristic of a primary stress is that it is not self-limiting. Primary stresses are generally due to internal or external pressure or produced by sustained external forces and moments. Thermal stresses are never classified as primary stresses.

Primary general stresses are divided into membrane and bending stresses. The need for dividing primary general stress into membrane and bending is that the calculated value of a primary bending stress may be allowed to go higher than that of a primary membrane stress. Primary stresses that exceed the yield strength of the material can cause failure or gross distortion. Typical calculations of primary stress are:

$$\frac{PR}{t}, \frac{F}{A}, \frac{MC}{I}, \quad \text{and} \quad \frac{TC}{J}$$

Primary general membrane stress, P_m. This stress occurs across the entire cross section of the vessel. It is remote from discontinuities such as head-shell intersections, cone-cylinder intersections, nozzles, and supports. Examples are:

a. Circumferential and longitudinal stress due to pressure.
b. Compressive and tensile axial stresses due to wind.
c. Longitudinal stress due to the bending of the horizontal vessel over the saddles.
d. Membrane stress in the center of the flat head.
e. Membrane stress in the nozzle wall within the area of reinforcement due to pressure or external loads.
f. Axial compression due to weight.

Primary general bending stress, P_b. Primary bending stresses are due to sustained loads and are capable of causing collapse of the vessel. There are relatively few areas where primary bending occurs:

a. Bending stress in the center of a flat head or crown of a dished head.
b. Bending stress in a shallow conical head.
c. Bending stress in the ligaments of closely spaced openings.

Local primary membrane stress, P_L. Local primary membrane stress is not technically a classification of stress but a stress category, since it is a combination of two stresses. The combination it represents is primary membrane stress, P_m, plus secondary membrane stress, Q_m, produced from sustained loads. These have been grouped together in order to limit the allowable stress for this particular combination to a level lower than allowed for other primary and secondary stress applications. It was felt that local stress from sustained (unrelenting) loads presented a great enough hazard for the combination to be "classified" as a primary stress.

A local primary stress is produced either by design pressure alone or by other mechanical loads. Local primary

stresses have some self-limiting characteristics like secondary stresses. Since they are localized, once the yield strength of the material is reached, the load is redistributed to stiffer portions of the vessel. However, since any deformation associated with yielding would be unacceptable, an allowable stress lower than secondary stresses is assigned. The basic difference between a primary local stress and a secondary stress is that a primary local stress is produced by a load that is unrelenting; the stress is just redistributed. In a secondary stress, yielding relaxes the load and is truly self-limiting. The ability of primary local stresses to redistribute themselves after the yield strength is attained locally provides a safety-valve effect. Thus, the higher allowable stress applies only to a local area.

Primary local membrane stresses are a combination of membrane stresses only. Thus only the "membrane" stresses from a local load are combined with primary general membrane stresses, not the bending stresses. The bending stresses associated with a local loading are secondary stresses. Therefore, the membrane stresses from a WRC-107-type analysis must be broken out separately and combined with primary general stresses. The same is true for discontinuity membrane stresses at head-shell junctures, cone-cylinder junctures, and nozzle-shell junctures. The bending stresses would be secondary stresses.

Therefore, $P_L = P_m + Q_m$, where Q_m is a local stress from a sustained or unrelenting load. Examples of primary local membrane stresses are:

a. P_m + membrane stresses at local discontinuities:
   1. Head-shell juncture
   2. Cone-cylinder juncture
   3. Nozzle-shell juncture
   4. Shell-flange juncture
   5. Head-skirt juncture
   6. Shell-stiffening ring juncture
b. P_m + membrane stresses from local sustained loads:
   1. Support lugs
   2. Nozzle loads
   3. Beam supports
   4. Major attachments

Secondary stress. The basic characteristic of a secondary stress is that it is self-limiting. As defined earlier, this means that local yielding and minor distortions can satisfy the conditions which caused the stress to occur. Application of a secondary stress cannot cause structural failure due to the restraints offered by the body to which the part is attached. Secondary mean stresses are developed at the junctions of major components of a pressure vessel. Secondary mean stresses are also produced by sustained loads other than internal or external pressure. Radial loads on nozzles produce secondary mean stresses in the shell at the junction of the nozzle. Secondary stresses are strain-induced stresses.

Discontinuity stresses are only considered as secondary stresses if their extent along the length of the shell is limited. Division 2 imposes the restriction that the length over which the stress is secondary is $\sqrt{R_m t}$. Beyond this distance, the stresses are considered as primary mean stresses. In a cylindrical vessel, the length $\sqrt{R_m t}$ represents the length over which the shell behaves as a ring.

A further restriction on secondary stresses is that they may not be closer to another gross structural discontinuity than a distance of $2.5\sqrt{R_m t}$. This restriction is to eliminate the additive effects of edge moments and forces.

Secondary stresses are divided into two additional groups, membrane and bending. Examples of each are as follows:

Secondary membrane stress, Q_m.
a. Axial stress at the juncture of a flange and the hub of the flange.
b. Thermal stresses.
c. Membrane stress in the knuckle area of the head.
d. Membrane stress due to local relenting loads.

Secondary bending stress, Q_b.
a. Bending stress at a gross structural discontinuity: nozzles, lugs, etc. (relenting loadings only).
b. The nonuniform portion of the stress distribution in a thick-walled vessel due to internal pressure.
c. The stress variation of the radial stress due to internal pressure in thick-walled vessels.
d. Discontinuity stresses at stiffening or support rings.

Note: For b and c it is necessary to subtract out the average stress which is the primary stress. Only the varying part of the stress distribution is a secondary stress.

Peak stress, F. Peak stresses are the additional stresses due to stress intensification in highly localized areas. They apply to both sustained loads and self-limiting loads. There are no significant distortions associated with peak stresses. Peak stresses are additive to primary and secondary stresses present at the point of the stress concentration. Peak stresses are only significant in fatigue conditions or brittle materials. Peak stresses are sources of fatigue cracks and apply to membrane, bending, and shear stresses. Examples are:

a. Stress at the corner of a discontinuity.
b. Thermal stresses in a wall caused by a sudden change in the surface temperature.
c. Thermal stresses in cladding or weld overlay.
d. Stress due to notch effect (stress concentration).

Categories of Stress

Once the various stresses of a component are calculated, they must be combined and this final result compared to an

allowable stress (see Table 1-1). The combined classes of stress due to a combination of loads acting at the same time are stress categories. Each category has assigned limits of stress based on the hazard it represents to the vessel. The following is derived basically from ASME Code, Section VIII, Division 2, simplified for application to Division 1 vessels and allowable stresses. It should be used as a guideline only because Division 1 recognizes only two categories of stress—primary membrane stress and primary bending stress. Since the calculations of most secondary (thermal and discontinuities) and peak stresses are not included in this book, these categories can be considered for reference only. In addition, Division 2 utilizes a factor K multiplied by the allowable stress for increase due to short-term loads due to seismic or upset conditions. It also sets allowable limits of combined stress for fatigue loading where secondary and peak stresses are major considerations. Table 1-1 sets allowable stresses for both stress classifications and stress categories.

Table 1-1
Allowable Stresses for Stress Classifications and Categories

Stress Classification or Category	Allowable Stress
General primary membrane, P_m	SE
General primary bending, P_b	$1.5SE < .9F_y$
Local primary membrane, P_L ($P_L = P_m + Q_{ms}$)	$1.5SE < .9F_y$
Secondary membrane, Q_m	$1.5SE < .9F_y$
Secondary bending, Q_b	$3SE < 2F_y < UTS$
Peak, F	$2S_a$
$P_m + P_b + Q_m^* + Q_b$	$3SE < 2F_y < UTS$
$P_L + P_b$	$1.5SE < .9F_y$
$P_m + P_b + Q_m^* + Q_b$	$3SE < 2F_y < UTS$
$P_m + P_b + Q_m^* + Q_b + F$	$2S_a$

Notes:
Q_{ms} = membrane stresses from sustained loads
Q_m^* = membrane stresses from relenting, self-limiting loads
S = allowable stress per ASME Code, Section VIII, Division 1, at design temperature
F_y = minimum specified yield strength at design temperature
UTS = minimum specified tensile strength
S_a = allowable stress for any given number of cycles from design fatigue curves.

SPECIAL PROBLEMS

This book provides detailed methods to cover those areas most frequently encountered in pressure vessel design. The topics chosen for this section, while of the utmost interest to the designer, represent problems of a specialized nature. As such, they are presented here for information purposes, and detailed solutions are not provided. The solutions to these special problems are complicated and normally beyond the expertise or available time of the average designer.

The designer should be familiar with these topics in order to recognize when special consideration is warranted. If more detailed information is desired, there is a great deal of reference material available, and special references have been included for this purpose. Whenever solutions to problems in any of these areas are required, the design or analysis should be referred to experts in the field who have proven experience in their solution.

Thick-Walled Pressure Vessels

As discussed previously, the equations used for design of thin-walled vessels are inadequate for design or prediction of failure of thick-walled vessels where $R_m/t < 10$. There are many types of vessels in the thick-walled vessel category as outlined in the following, but for purposes of discussion here only the monobloc type will be discussed. Design of thick-wall vessels or cylinders is beyond the scope of this book, but it is hoped that through the following discussion some insight will be gained.

In a thick-walled vessel subjected to internal pressure, both circumferential and radial stresses are maximum on the inside surface. However, failure of the shell does not begin at the bore but in fibers along the outside surface of the shell. Although the fibers on the inside surface do reach yield first they are incapable of failing because they are restricted by the outer portions of the shell. Above the elastic-breakdown pressure the region of plastic flow or "overstrain" moves radially outward and causes the circumferential stress to reduce at the inner layers and to increase at the outer layers. Thus the maximum hoop stress is reached first at the outside of the cylinder and eventual failure begins there.

The major methods for manufacture of thick-walled pressure vessels are as follows:

1. *Monobloc*—Solid vessel wall.
2. *Multilayer*—Begins with a core about ½ in. thick and successive layers are applied. Each layer is vented (except the core) and welded individually with no overlapping welds.
3. *Multiwall*—Begins with a core about 1½ in. to 2 in. thick. Outer layers about the same thickness are successively "shrunk fit" over the core. This creates compressive stress in the core, which is relaxed during pressurization. The process of compressing layers is called autofrettage from the French word meaning "self-hooping."
4. *Multilayer autofirettage*—Begins with a core about ½ in. thick. Bands or forged rings are slipped outside

and then the core is expanded hydraulically. The core is stressed into plastic range but below ultimate strength. The outer rings are maintained at a margin below yield strength. The elastic deformation residual in the outer bands induces compressive stress in the core, which is relaxed during pressurization.

5. *Wire wrapped vessels*—Begin with inner core of thickness less than required for pressure. Core is wrapped with steel cables in tension until the desired autofrettage is achieved.
6. *Coil wrapped vessels*—Begin with a core that is subsequently wrapped or coiled with a thin steel sheet until the desired thickness is obtained. Only two longitudinal welds are used, one attaching the sheet to the core and the final closure weld. Vessels 5 to 6 ft in diameter for pressures up to 5,000 psi have been made in this manner.

Other techniques and variations of the foregoing have been used but these represent the major methods. Obviously these vessels are made for very high pressures and are very expensive.

For materials such as mild steel, which fail in shear rather than direct tension, the maximum shear theory of failure should be used. For internal pressure only, the maximum shear stress occurs on the inner surface of the cylinder. At this surface both tensile and compressive stresses are maximum. In a cylinder, the maximum tensile stress is the circumferential stress, σ_ϕ. The maximum compressive stress is the radial stress, σ_r. These stresses would be computed as follows:

$$\sigma_\phi = \frac{PR_i^2}{R_o^2 - R_i^2}\left(1 + \frac{R_o^2}{R_i^2}\right) = (+)$$

$$\sigma_r = \frac{PR_i^2}{R_o^2 - R_i^2}\left(1 - \frac{R_o^2}{R_i^2}\right) = (-)$$

Therefore the maximum shear stress, τ, is [9]:

$$\tau_{max} = \frac{\sigma_1 - \sigma_2}{2} = \frac{\sigma_\phi - \sigma_r}{2} = \frac{PR_o^2}{R_o^2 - R_i^2}$$

ASME Code, Section VIII, Division 1, has developed alternate equations for thick-walled monobloc vessels. The equations for thickness of cylindrical shells and spherical shells are as follows:

- *Cylindrical shells* (Para. 1-2 (a) (1)) where $t > .5\ R_i$ or $P > .385\ SE$:

$$Z = \frac{SE + P}{SE - P}$$

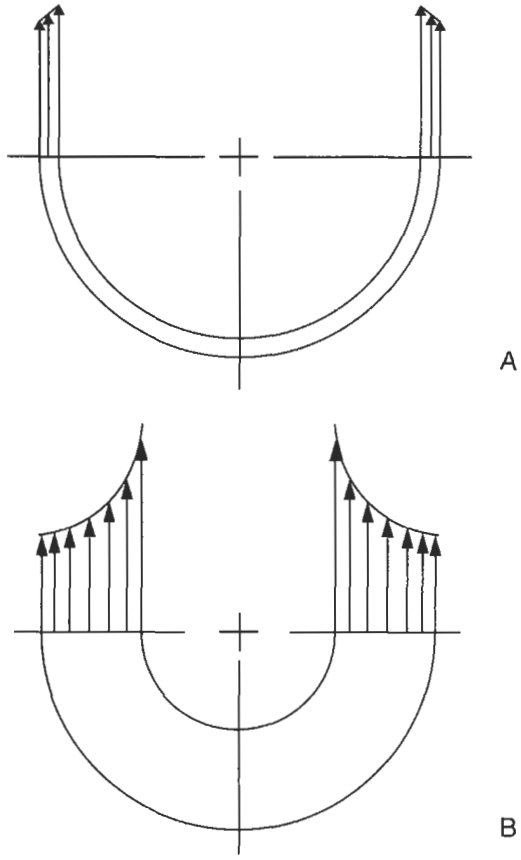

Figure 1-3. Comparision of stress distribution between thin-walled (A) and thick-walled (B) vessels.

$$t = \frac{R_o(\sqrt[3]{Z} - 1)}{Z}$$

- *Spherical shells* (Para. 1-3) where $t > .356\ R_i$ or $P > .665\ SE$:

$$Y = \frac{2(SE + P)}{2SE - P}$$

$$t = R_o\left(\frac{\sqrt[3]{Y} - 1}{\sqrt[3]{Y}}\right)$$

The stress distribution in the vessel wall of a thick-walled vessel varies across the section. This is also true for thin-walled vessels, but for purposes of analysis the stress is considered uniform since the difference between the inner and outer surface is slight. A visual comparison is offered in Figure 1-3.

Thermal Stresses

Whenever the expansion or contraction that would occur normally as a result of heating or cooling an object is prevented, thermal stresses are developed. The stress is always caused by some form of mechanical restraint.

Thermal stresses are "secondary stresses" because they are self-limiting. That is, yielding or deformation of the part relaxes the stress (except thermal stress ratcheting). Thermal stresses will not cause failure by rupture in ductile materials except by fatigue over repeated applications. They can, however, cause failure due to excessive deformations.

Mechanical restraints are either internal or external. External restraint occurs when an object or component is supported or contained in a manner that restricts thermal movement. An example of external restraint occurs when piping expands into a vessel nozzle creating a radial load on the vessel shell. Internal restraint occurs when the temperature through an object is not uniform. Stresses from a "thermal gradient" are due to internal restraint. Stress is caused by a thermal gradient whenever the temperature distribution or variation within a member creates a differential expansion such that the natural growth of one fiber is influenced by the different growth requirements of adjacent fibers. The result is distortion or warpage.

A transient thermal gradient occurs during heat-up and cool-down cycles where the thermal gradient is changing with time.

Thermal gradients can be logarithmic or linear across a vessel wall. Given a steady heat input inside or outside a tube the heat distribution will be logarithmic if there is a temperature difference between the inside and outside of the tube. This effect is significant for thick-walled vessels. A linear temperature distribution occurs if the wall is thin. Stress calculations are much simpler for linear distribution.

Thermal stress ratcheting is progressive incremental inelastic deformation or strain that occurs in a component that is subjected to variations of mechanical and thermal stress. Cyclic strain accumulation ultimately can lead to incremental collapse. Thermal stress ratcheting is the result of a sustained load and a cyclically applied temperature distribution.

The fundamental difference between mechanical stresses and thermal stresses lies in the nature of the loading. Thermal stresses as previously stated are a result of restraint or temperature distribution. The fibers at high temperature are compressed and those at lower temperatures are stretched. The stress pattern must only satisfy the requirements for equilibrium of the internal forces. The result being that yielding will relax the thermal stress. If a part is loaded mechanically beyond its yield strength, the part will continue to yield until it breaks, unless the deflection is limited by strain hardening or stress redistribution. The external load remains constant, thus the internal stresses cannot relax.

The basic equations for thermal stress are simple but become increasingly complex when subjected to variables such as thermal gradients, transient thermal gradients, logarithmic gradients, and partial restraint. The basic equations follow. If the temperature of a unit cube is changed from T_1 to T_2 and the growth of the cube is fully restrained:

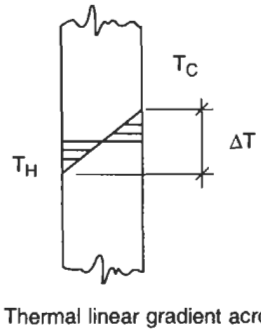

Figure 1-4. Thermal linear gradient across shell wall.

where T_1 = initial temperature, °F
T_2 = new temperature, °F
α = mean coefficient of thermal expansion in./in./°F
E = modulus of elasticity, psi
υ = Poisson's ratio = .3 for steel
ΔT = mean temperature difference, °F

Case 1: If the bar is restricted only in one direction but free to expand in the other direction, the resulting uniaxial stress, σ, would be

$$\sigma = -E\alpha(T_2 - T_1)$$

- If $T_2 > T_1$, σ is compressive (expansion).
- If $T_1 > T_2$, σ is tensile (contraction).

Case 2: If restraint is in both directions, x and y, then:

$$\sigma_x = \sigma_y = -\alpha E\ \Delta T/1 - \upsilon$$

Case 3: If restraint is in all three directions, x, y, and z, then

$$\sigma_x = \sigma_y = \sigma_z = -\alpha E\ \Delta T/1 - 2\upsilon$$

Case 4: If a thermal linear gradient is across the wall of a thin shell (see Figure 1–4), then:

$$\sigma_x = \sigma_\phi = \pm\alpha E\ \Delta T/2(1 - \upsilon)$$

This is a bending stress and not a membrane stress. The hot side is in tension, the cold side in compression. Note that this is independent of vessel diameter or thickness. The stress is due to internal restraint.

Discontinuity Stresses

Vessel sections of different thickness, material, diameter, and change in directions would all have different displacements if allowed to expand freely. However, since they are connected in a continuous structure, they must deflect and rotate together. The stresses in the respective parts at or near the juncture are called discontinuity stresses. Discontinuity stresses are necessary to satisfy compatibility of deformation in the region. They are local in extent but can be of

very high magnitude. Discontinuity stresses are "secondary stresses" and are self-limiting. That is, once the structure has yielded, the stresses are reduced. In average application they will not lead to failure. Discontinuity stresses do become an important factor in fatigue design where cyclic loading is a consideration. Design of the juncture of the two parts is a major consideration in reducing discontinuity stresses.

In order to find the state of stress in a pressure vessel, it is necessary to find both the membrane stresses and the discontinuity stresses. From superposition of these two states of stress, the total stresses are obtained. Generally when combined, a higher allowable stress is permitted. Due to the complexity of determining discontinuity stress, solutions will not be covered in detail here. The designer should be aware that for designs of high pressure (>1,500 psi), brittle material or cyclic loading, discontinuity stresses may be a major consideration.

Since discontinuity stresses are self-limiting, allowable stresses can be very high. One example specifically addressed by the ASME Code, Section VIII, Division 1, is discontinuity stresses at cone-cylinder intersections where the included angle is greater than 60°. Para. 1-5(e) recommends limiting combined stresses (membrane + discontinuity) in the longitudinal direction to 4SE and in the circumferential direction to 1.5SE.

ASME Code, Section VIII, Division 2, limits the combined stress, primary membrane and discontinuity stresses to $3S_m$, where S_m is the lesser of $\frac{2}{3}F_y$ or $\frac{1}{3}$U.T.S., whichever is lower.

There are two major methods for determining discontinuity stresses:

1. *Displacement Method*—Conditions of equilibrium are expressed in terms of displacement.
2. *Force Method*—Conditions of compatibility of displacements are expressed in terms of forces.

See References 2, Article 4–7; 6, Chapter 8; and 7, Chapter 4 for detailed information regarding calculation of discontinuity stresses.

Fatigue Analysis

ASME Code, Section VIII, Division 1, does not specifically provide for design of vessels in cyclic service. Although considered beyond the scope of this text as well, the designer must be aware of conditions that would require a fatigue analysis to be made.

When a vessel is subject to repeated loading that could cause failure by the development of a progressive fracture, the vessel is in cyclic service. ASME Code, Section VIII, Division 2, has established specific criteria for determining when a vessel must be designed for fatigue.

It is recognized that Code formulas for design of details, such as heads, can result in yielding in localized regions. Thus localized stresses exceeding the yield point may be encountered even though low allowable stresses have been used in the design. These vessels, while safe for relatively static conditions of loading, would develop "progressive fracture" after a large number of repeated loadings due to these high localized and secondary bending stresses. It should be noted that vessels in cyclic service require special consideration in both design *and* fabrication.

Fatigue failure can also be a result of thermal variations as well as other loadings. Fatigue failure has occurred in boiler drums due to temperature variations in the shell at the feed water inlet. In cases such as this, design details are of extreme importance.

Behavior of metal under fatigue conditions varies significantly from normal stress-strain relationships. Damage accumulates during each cycle of loading and develops at localized regions of high stress until subsequent repetitions finally cause visible cracks to grow, join, and spread. Design details play a major role in eliminating regions of stress raisers and discontinuities. It is not uncommon to have the design strength cut in half by poor design details. Progressive fractures develop from these discontinuities even though the stress is well below the static elastic strength of the material.

In fatigue service the localized stresses at abrupt changes in section, such as at a head junction or nozzle opening, misalignment, defects in construction, and thermal gradients *are* the significant stresses.

The determination of the need for a fatigue evaluation is in itself a complex job best left to those experienced in this type of analysis. For specific requirements for determining if a fatigue analysis is required see ASME Code, Section VIII, Division 2, Para. AD-160.

For additional information regarding designing pressure vessels for fatigue see Reference 7, Chapter 5.

REFERENCES

1. ASME Boiler and Pressure Vessel Code, Section VIII, Division 1, 1995 Edition, American Society of Mechanical Engineers.
2. ASME Boiler and Pressure Vessel Code, Section VIII, Division 2, 1995 Edition, American Society of Mechanical Engineers.
3. Popov, E. P., *Mechanics of Materials*, Prentice Hall, Inc., 1952.
4. Bednar, H. H., *Pressure Vessel Design Handbook*, Van Nostrand Reinhold Co., 1981.
5. Harvey, J. F., *Theory and Design of Modern Pressure Vessels*, Van Nostrand Reinhold Co., 1974.
6. Hicks, E. J. (Ed.), *Pressure Vessels—A Workbook for Engineers*, Pressure Vessel Workshop, Energy—Sources Technology Conference and Exhibition, Houston, American Society of Petroleum Engineers, January 19–21, 1981.
7. *Pressure Vessel and Piping Design*, Collected Papers 1927–1959, American Society of Mechanical Engineers, 1960.
8. Brownell, L. E., and Young, E. H., *Process Equipment Design*, John Wiley and Sons, 1959.
9. Roark, R. J., and Young, W. C., *Formulas for Stress and Strain*, 5th Edition, McGraw Hill Book Co., 1975.
10. Burgreen, D., *Design Methods for Power Plant Structures*, C. P. Press, 1975.
11. Criteria of the ASME Boiler and Pressure Vessel Code for Design by Analysis in Sections III and VIII, Division 2, American Society of Mechanical Engineers.

2
General Design

PROCEDURE 2-1

GENERAL VESSEL FORMULAS [1, 2]

Notation

P = internal pressure, psi
D_i, D_o = inside/outside diameter, in.
S = allowable or calculated stress, psi
E = joint efficiency
L = crown radius, in.
R_i, R_o = inside/outside radius, in.
K, M = coefficients (See Note 3)
σ_x = longitudinal stress, psi
σ_ϕ = circumferential stress, psi
R_m = mean radius of shell, in.
t = thickness or thickness required of shell, head, or cone, in.
r = knuckle radius, in.

Notes

1. Formulas are valid for:
   a. Pressures < 3,000 psi.
   b. Cylindrical shells where $t \leq 0.5\,R_i$ or $P \leq 0.385\,SE$. For thicker shells see Reference 1, Para. 1–2.
   c. Spherical shells and hemispherical heads where $t \leq 0.356\,R_i$ or $P \leq 0.665\,SE$. For thicker shells see Reference 1, Para. 1–3.
2. All ellipsoidal and torispherical heads having a minimum specified tensile strength greater than 80,000 psi shall be designed using S = 20,000 psi at ambient temperature and reduced by the ratio of the allowable stresses at design temperature and ambient temperature where required.

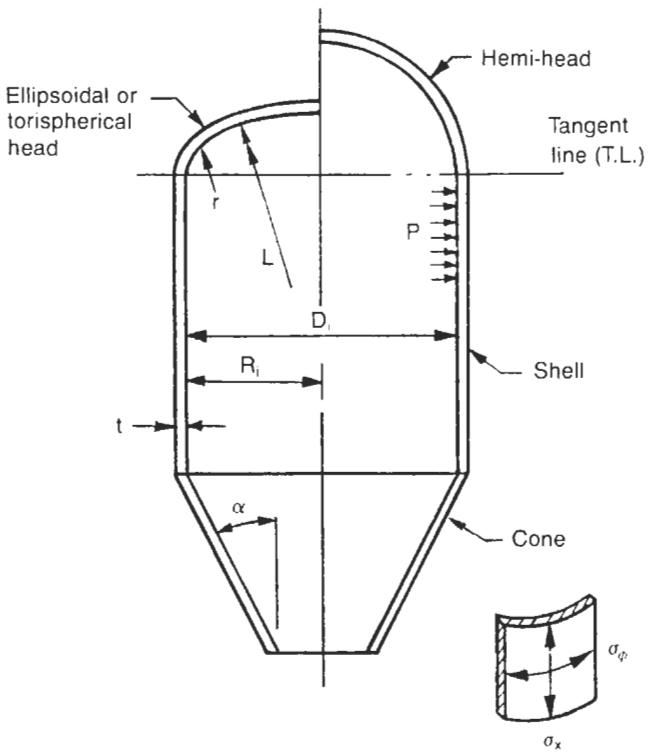

Figure 2-1. General configuration and dimensional data for vessel shells and heads.

3. Formulas for factors:

$$K = 0.167\left[2 + \left(\frac{D}{2h}\right)^2\right]$$

$$M = 0.25\left(3 + \sqrt{\frac{L}{r}}\right)$$

Table 2-1
General Vessel Formulas

Part	Stress Formula	Thickness, t		Pressure, P		Stress, S	
		I.D.	O.D.	I.D.	O.D.	I.D.	O.D.
Shell							
Longitudinal [1, Section UG-27(c)(2)]	$\sigma_x = \frac{PR_m}{0.2t}$	$\frac{PR_i}{2SE + 0.4P}$	$\frac{PR_o}{2SE + 1.4P}$	$\frac{2SEt}{R_i - 0.4t}$	$\frac{2SEt}{R_o - 1.4t}$	$\frac{P(R_i - 0.4t)}{2Et}$	$\frac{P(R_o - 1.4t)}{2Et}$
Circumferential [1, Section UG-27(c)(1); Section 1-1(a)(1)]	$\sigma_\phi = \frac{PR_m}{t}$	$\frac{PR_i}{SE - 0.6P}$	$\frac{PR_o}{SE + 0.4P}$	$\frac{SEt}{R_i + 0.6t}$	$\frac{SEt}{R_o - 0.4t}$	$\frac{P(R_i + 0.6t)}{Et}$	$\frac{P(R_o - 0.4t)}{Et}$
Heads							
Hemi sphere [1, Section 1-1(a)(2); Section UG-27(d)]	$\sigma_x = \sigma_\phi = \frac{PR_m}{2t}$	$\frac{PR_i}{2SE - 0.2P}$	$\frac{PR_o}{2SE + 0.8P}$	$\frac{2SEt}{R_i + 0.2t}$	$\frac{2SEt}{R_o - 0.8t}$	$\frac{P(R_i + 0.2t)}{2Et}$	$\frac{P(R_o - 0.8t)}{2Et}$
Ellipsoidal [1, Section 1-4(c)]	See Procedure 2-2	$\frac{PD_iK}{2SE - 0.2P}$	$\frac{PD_oK}{2SE + 2P(K - 0.1)}$	$\frac{2SEt}{KD_i + 0.2t}$	$\frac{2SEt}{KD_o - 2t(K - 0.1)}$	See Procedure 2-2	
2:1 S.E. [1, Section UG-32(d)]	"	$\frac{PD_i}{2SE - 0.2P}$	$\frac{PD_o}{2SE + 1.8P}$	$\frac{2SEt}{D_i + 0.2t}$	$\frac{2SEt}{D_o - 1.8t}$	"	
100%–6% Torispherical [1, Section UG-32(e)]	"	$\frac{0.885PL_i}{SE - 0.1P}$	$\frac{0.885PL_o}{SE + 0.8P}$	$\frac{SEt}{0.885L_i + 0.1t}$	$\frac{SEt}{0.885L_o - 0.8t}$	"	
Torispherical L/r < 16.66 [1, Section 1-4(d)]	"	$\frac{PL_iM}{2SE - 0.2P}$	$\frac{PL_oM}{2SE + P(M - 0.2)}$	$\frac{2SEt}{L_iM + 0.2t}$	$\frac{2SEt}{L_oM - t(M - 0.2)}$	"	
Cone							
Longitudinal	$\sigma_x = \frac{PR_m}{2t\cos\alpha}$	$\frac{PD_i}{4\cos\alpha\,(SE + 0.4P)}$	$\frac{PD_o}{4\cos\alpha\,(SE + 1.4P)}$	$\frac{4SEt\cos\alpha}{D_i - 0.8t\cos\alpha}$	$\frac{4SEt\cos\alpha}{D_o - 2.8t\cos\alpha}$	$\frac{P(D_i - 0.8t\cos\alpha)}{4Et\cos\alpha}$	$\frac{P(D_o - 2.8t\cos\alpha)}{4Et\cos\alpha}$
Circumferential [1, Section 1-4(e); Section UG-32(g)]	$\sigma_\phi = \frac{PR_m}{t\cos\alpha}$	$\frac{PD_i}{2\cos\alpha\,(SE - 0.6P)}$	$\frac{PD_o}{2\cos\alpha\,(SE + 0.4P)}$	$\frac{2SEt\cos\alpha}{D_i + 1.2t\cos\alpha}$	$\frac{2SEt\cos\alpha}{D_o - 0.8t\cos\alpha}$	$\frac{P(D_i + 1.2t\cos\alpha)}{2Et\cos\alpha}$	$\frac{P(D_o - 0.8t\cos\alpha)}{2Et\cos\alpha}$

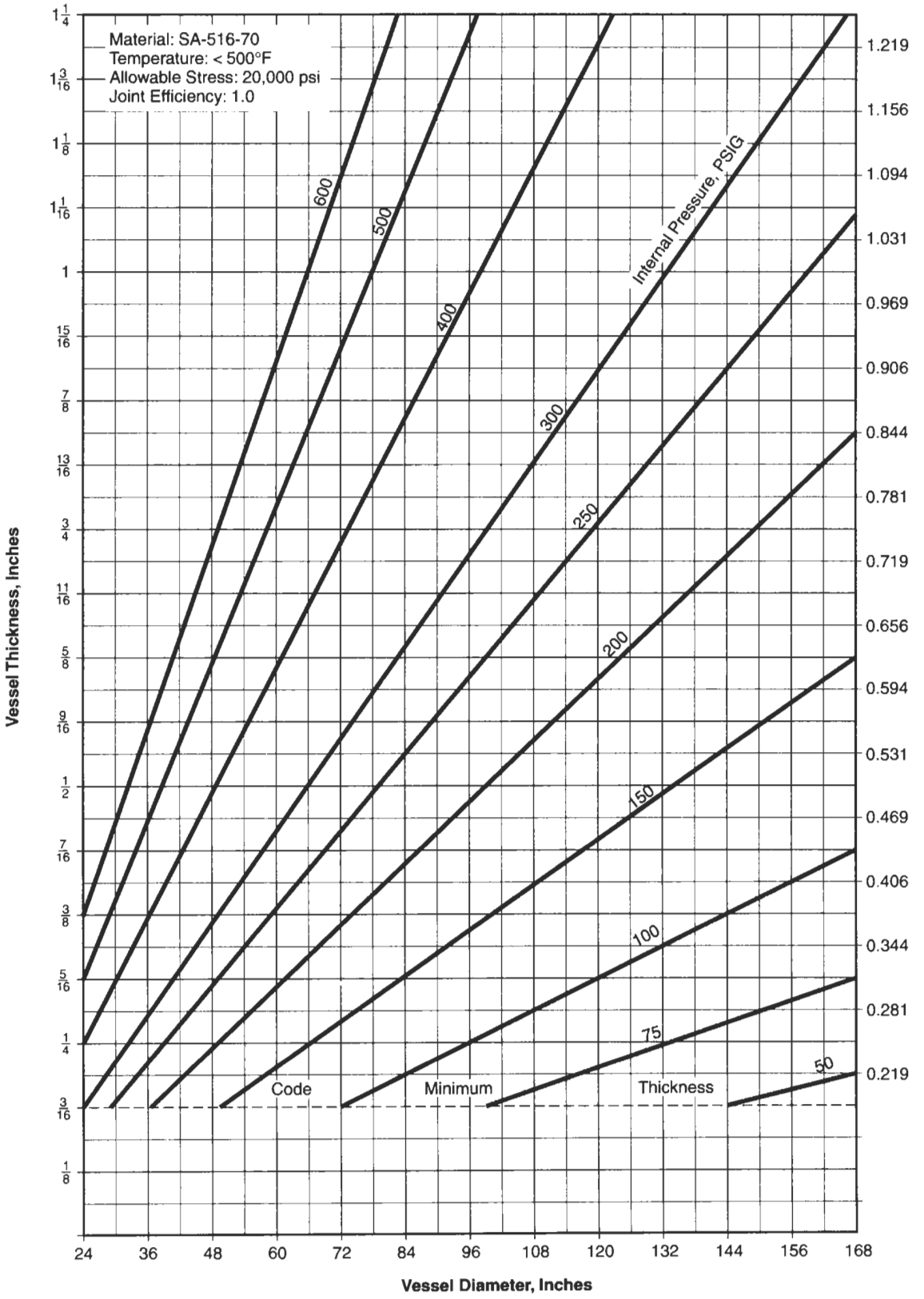

Figure 2-1a. Required shell thickness of cylindrical shell.

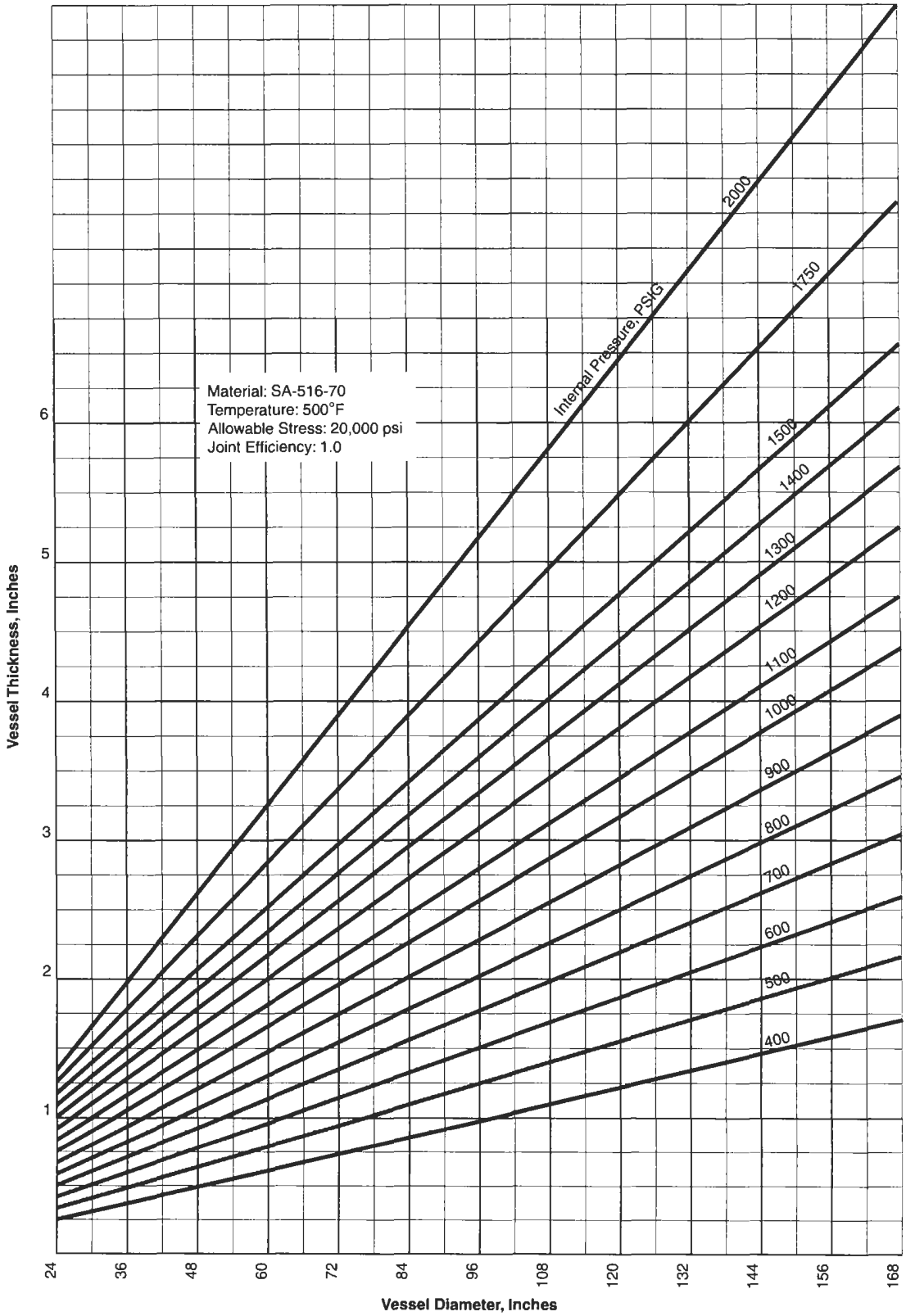

Figure 2-1a. (Continued)

PROCEDURE 2-2

EXTERNAL PRESSURE DESIGN

Notation

A = factor "A," strain, from ASME Section II, Part D, Subpart 3, dimensionless
A_s = cross-sectional area of stiffener, in.^{2}
B = factor "B," allowable compressive stress, from ASME Section II, Part D, Subpart 3, psi
D = inside diameter of cylinder, in.
D_o = outside diameter of cylinder, in.
D_L = outside diameter of the large end of cone, in.
D_s = outside diameter of small end of cone, in.
E = modulus of elasticity, psi
I = actual moment of inertia of stiffener, in.^{4}
I_s = required moment of inertia of stiffener, in.^{4}
I'_s = required moment of inertia of combined shell-ring cross section, in.^{4}
L = for cylinders—the design length for external pressure, including ⅓ the depth of heads, in. For cones—the design length for external pressure (see Figures 2-1b and 2-1c), in.
L_c = equivalent length of conical section, in.
L_s = length between stiffeners, in.
L_{T-T} = length of straight portion of shell, tangent to tangent, in.
P = design internal pressure, psi
P_a = allowable external pressure, psi
P_s = design external pressure, psi
R_o = outside radius of spheres and hemispheres, crown radius of torispherical heads, in.
t = thickness of cylinder, head or conical section, in.
t_c = equivalent thickness of cone, in.
α = half apex angle of cone, degrees

Unlike vessels which are designed for internal pressure alone, there is no single formula, or unique design, which fits the external pressure condition. Instead, there is a range of options available to the designer which can satisfy the solution of the design. The thickness of the cylinder is only one part of the design. Other factors which affect the design are the length of cylinder and the use, size, and spacing of stiffening rings. Designing vessels for external pressure is an iterative procedure. First, a design is selected with all of the variables included, then the design is checked to determine if it is adequate. If inadequate, the procedure is repeated until an acceptable design is reached.

Vessels subject to external pressure may fail at well below the yield strength of the material. The geometry of the part is the critical factor rather than material strength. Failures can occur suddenly, by collapse of the component.

External pressure can be caused in pressure vessels by a variety of conditions and circumstances. The design pressure may be less than atmospheric due to condensing gas or steam. Often refineries and chemical plants design all of their vessels for some amount of external pressure, regardless of the intended service, to allow for steam cleaning and the effects of the condensing steam. Other vessels are in vacuum service by nature of venturi devices or connection to a vacuum pump. Vacuums can be pulled inadvertently by failure to vent a vessel during draining, or from improperly sized vents.

External pressure can also be created when vessels are jacketed or when components are within multichambered vessels. Often these conditions can be many times greater than atmospheric pressure.

When vessels are designed for both internal and external pressure, it is common practice to first determine the shell thickness required for the internal pressure condition, then check that thickness for the maximum allowable external pressure. If the design is not adequate then a decision is made to either bump up the shell thickness to the next thickness of plate available, or add stiffening rings to reduce the "L" dimension. If the option of adding stiffening rings is selected, then the spacing can be determined to suit the vessel configuration.

Neither increasing the shell thickness to remove stiffening rings nor using the thinnest shell with the maximum number of stiffeners is economical. The optimum solution lies somewhere between these two extremes. Typically, the utilization of rings with a spacing of 2D for vessel diameters up to about eight feet in diameter and a ring spacing of approximately "D" for diameters greater than eight feet, provides an economical solution.

The design of the stiffeners themselves is also a trial and error procedure. The first trial will be quite close if the old API-ASME formula is used. The formula is as follows:

$$I_s = \frac{0.16 D_o^3 P_s L_s}{E}$$

Stiffeners should never be located over circumferential weld seams. If properly spaced they may also double as insulation support rings. Vacuum stiffeners, if combined with other stiffening rings, such as cone reinforcement rings or saddle stiffeners on horizontal vessels, must be designed for the combined condition, not each independently. If at all

possible, stiffeners should always clear shell nozzles. If unavoidable, special attention should be given to the design of a boxed stiffener or connection to the nozzle neck.

Design Procedure For Cylindrical Shells

Step 1: Assume a thickness if one is not already determined.

Step 2: Calculate dimensions "L" and "D." Dimension "L" should include one-third the depth of the heads. The overall length of cylinder would be as follows for the various head types:

W/(2) hemi-heads	$L = L_{T-T} + 0.333D$
W/(2) 2:1 S.E. heads	$L = L_{T-T} + 0.1666D$
W/(2) 100% – 6% heads	$L = L_{T-T} + 0.112D$

Step 3: Calculate L/D_o and D_o/t ratios

Step 4: Determine Factor "A" from ASME Code, Section II, Part D, Subpart 3, Fig G: Geometric Chart for Components Under External or Compressive Loadings (see Figure 2-1e).

Step 5: Using Factor "A" determined in step 4, enter the applicable material chart from ASME Code, Section II, Part D, Subpart 3 at the appropriate temperature and determine Factor "B."

Step 6: If Factor "A" falls to the left of the material line, then utilize the following equation to determine the allowable external pressure:

$$P_a = \frac{2AE}{3(D_o/t)}$$

Step 7: For values of "A" falling on the material line of the applicable material chart, the allowable external pressure should be computed as follows:

$$P_a = \frac{4B}{3(D_o/t)}$$

Step 8: If the computed allowable external pressure is less than the design external pressure, then a decision must be made on how to proceed. Either (a) select a new thickness and start the procedure from the beginning or (b) elect to use stiffening rings to reduce the "L" dimension. If stiffening rings are to be utilized, then proceed with the following steps.

Step 9: Select a stiffener spacing based on the maximum length of unstiffened shell (see Table 2-1a). The stiffener spacing can vary up to the maximum value allowable for the assumed thickness. Determine the number of stiffeners necessary and the corresponding "L" dimension.

Step 10: Assume an approximate ring size based on the following equation:

$$I = \frac{0.16D_o^3P_xL_s}{E}$$

Step 11: Compute Factor "B" from the following equation utilizing the area of the ring selected:

$$B = \frac{0.75PD_o}{t+A_s/L_s}$$

Step 12: Utilizing Factor "B" computed in step 11, find the corresponding "A" Factor from the applicable material curve.

Step 13: Determine the required moment of inertia from the following equation. Note that Factor "A" is the one found in step 12.

$$I_s = \frac{[D_o^2L_s(t+A_s/L_s)A]}{14}$$

Step 14: Compare the required moment of inertia, I, with the actual moment of inertia of the selected member. If the actual exceeds that which is required, the design is acceptable but may not be optimum. The optimization process is an iterative process in which a new member is selected, and steps 11 through 13 are repeated until the required size and actual size are approximately equal.

Notes

1. For conical sections where $\alpha < 22.5$ degrees, design the cone as a cylinder where $D_o = D_L$ and length is equal to L.
2. If a vessel is designed for less than 15 psi, and the external pressure condition is not going to be stamped on the nameplate, the vessel does not have to be designed for the external pressure condition.

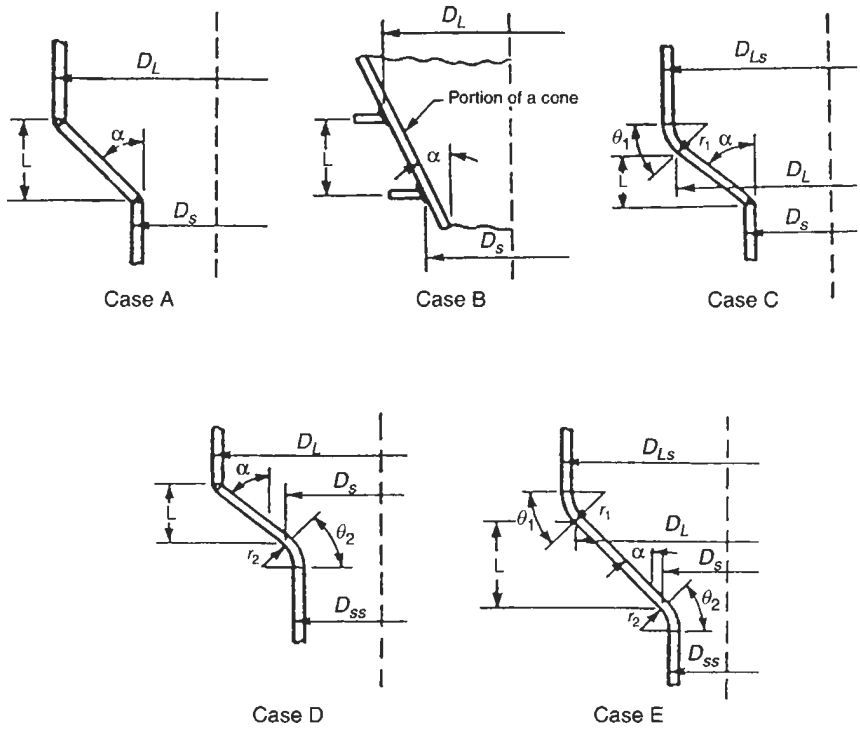

Figure 2-1b. External pressure cones 22 1/2° < α < 60°.

For Case B, $L_c = L$
For Cases A, C, D, E:

$$L_c = 0.5\left(1 + \frac{D_s}{D_L}\right)$$

$$t_c = t \cos \alpha$$

$$L_{c/D_L} =$$

$$D_{L/t_c} =$$

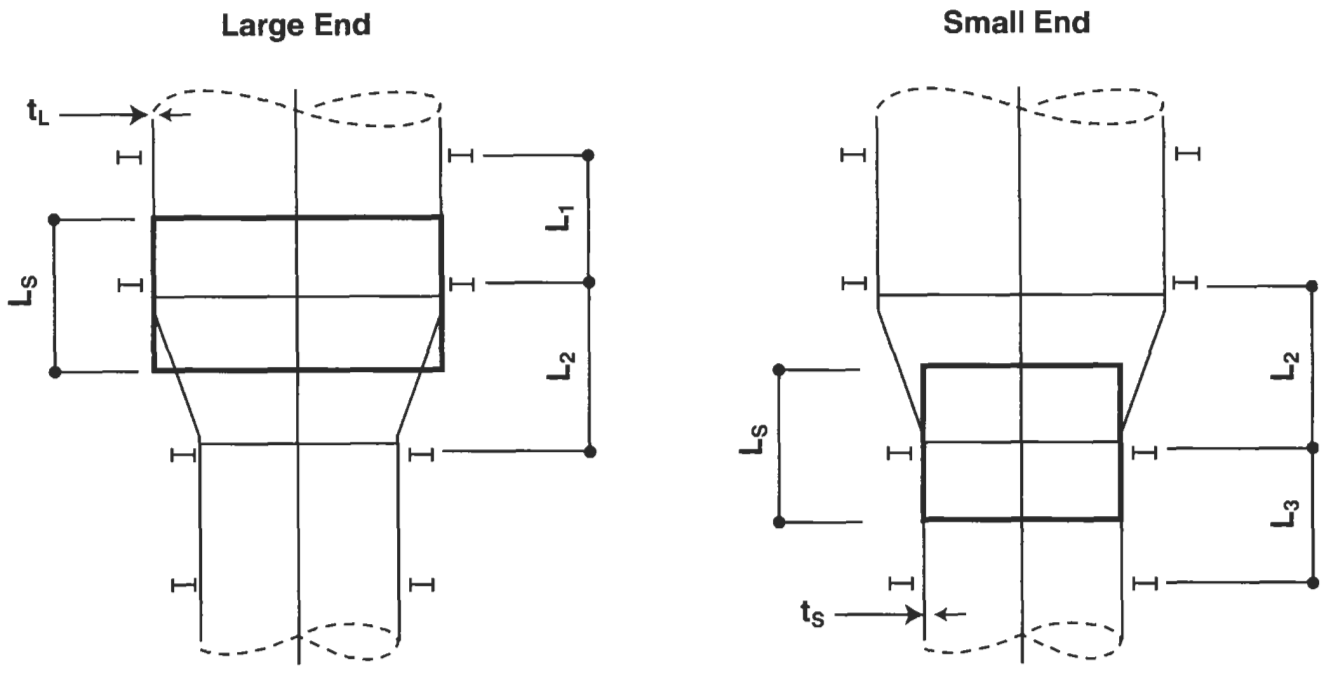

Figure 2-1c. Combined shell/cone design for stiffened shells.

Design stiffener for large end of cone as cylinder where:

$D_o = D_L$

$t = t_L$

$$L_s = \frac{L_1}{2} + \frac{L_2}{2}$$

Design stiffener for small end of cone as cylinder where:

$D_o = D_s$

$t = t_s$

$$L_s = \frac{L_3}{2} + \frac{L_2}{2}\left[1 + \frac{D_s}{D_L}\right]$$

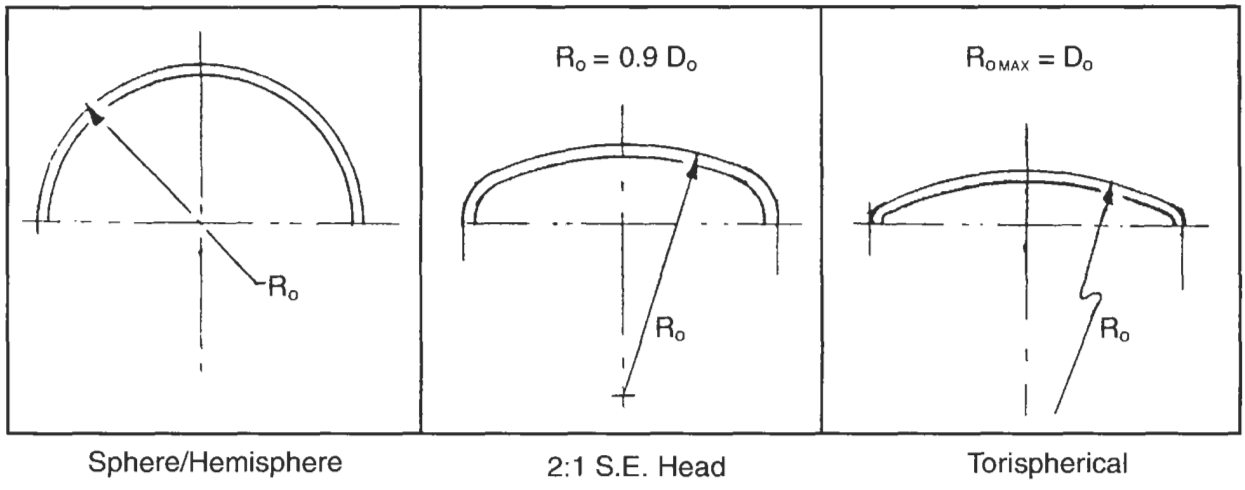

Figure 2-1d. External pressure ~ spheres and heads.

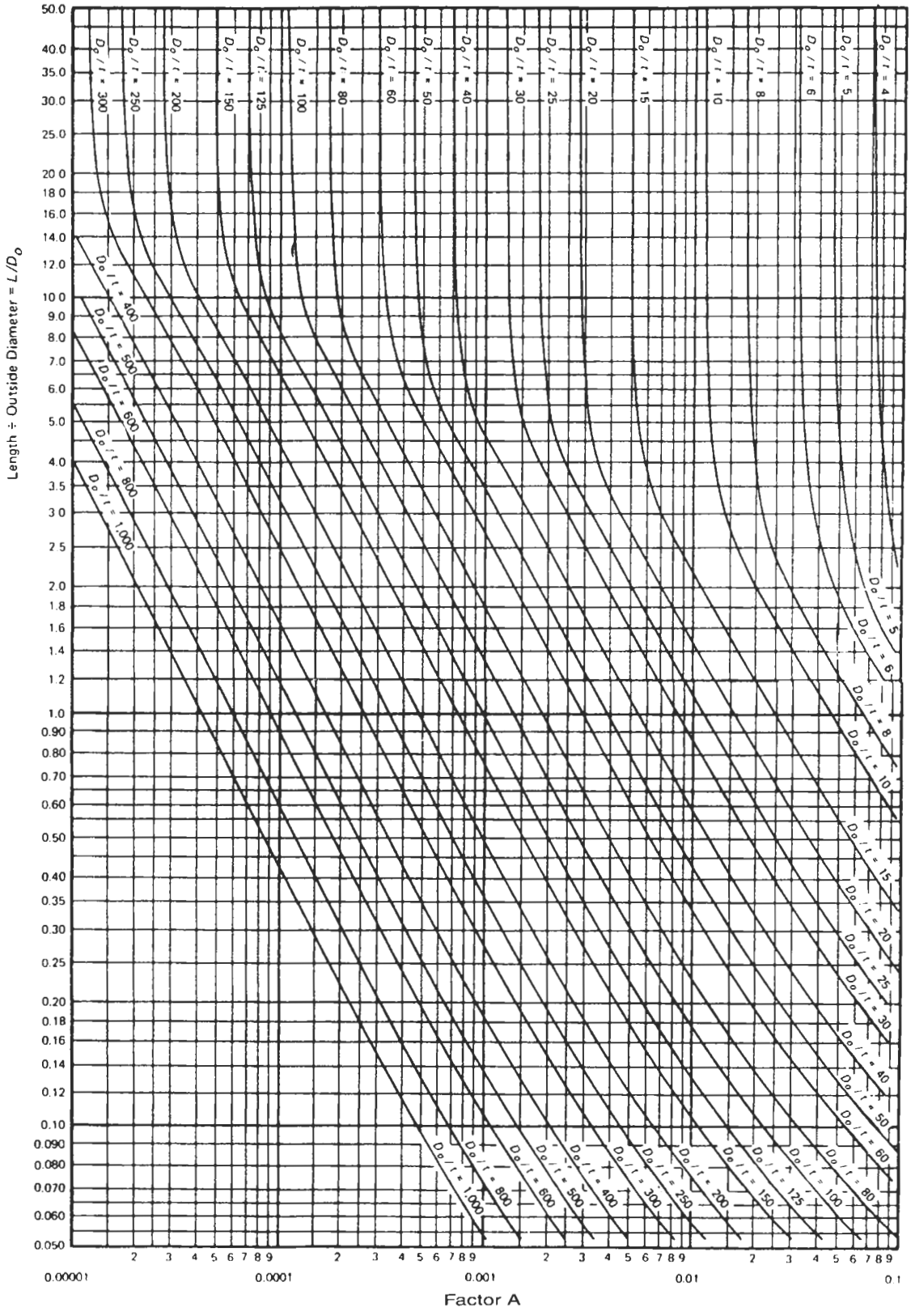

Figure 2-1e. Geometric chart for components under external or compressive loadings (for all materials). (Reprinted by permission from the ASME Code, Section VIII, Div. 1.)

Design Procedure For Spheres and Heads

Step 1: Assume a thickness and calculate Factor "A."

$$A = \frac{0.125t}{R_o}$$

Step 2: Find Factor "B" from applicable material chart.

$$B =$$

Step 3: Compute P_a.

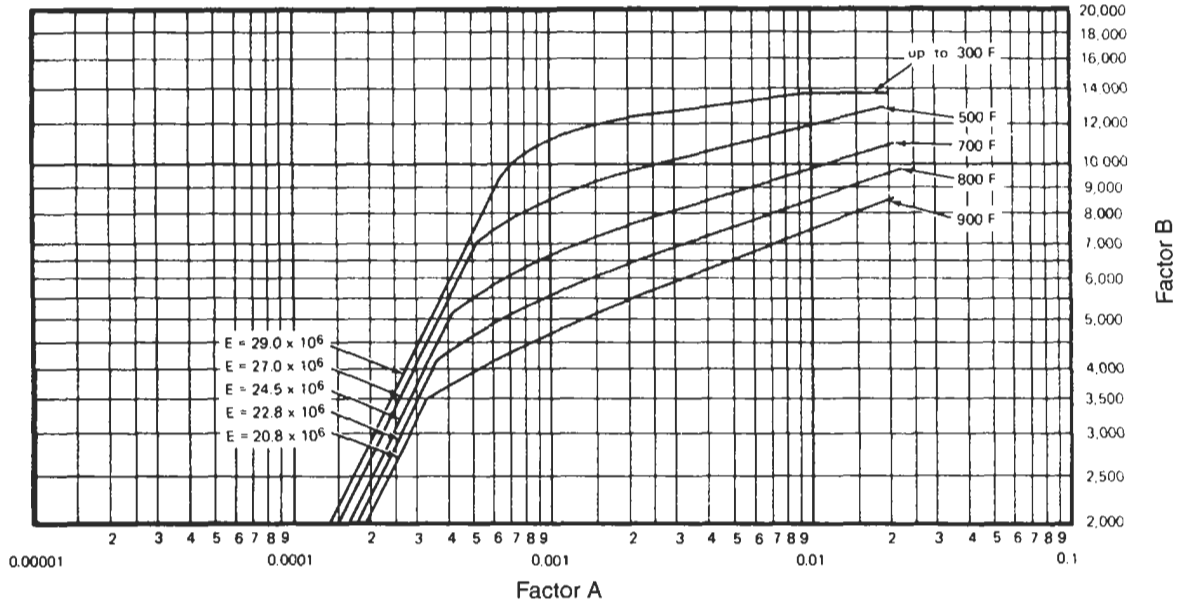

Figure 2-1f. Chart for determining shell thickness of components under external pressure when constructed of carbon or low-alloy steels (specified minimum yield strength 24,000 psi to, but not including, 30,000 psi). (Reprinted by permission from the ASME Code, Section VIII, Div. 1.)

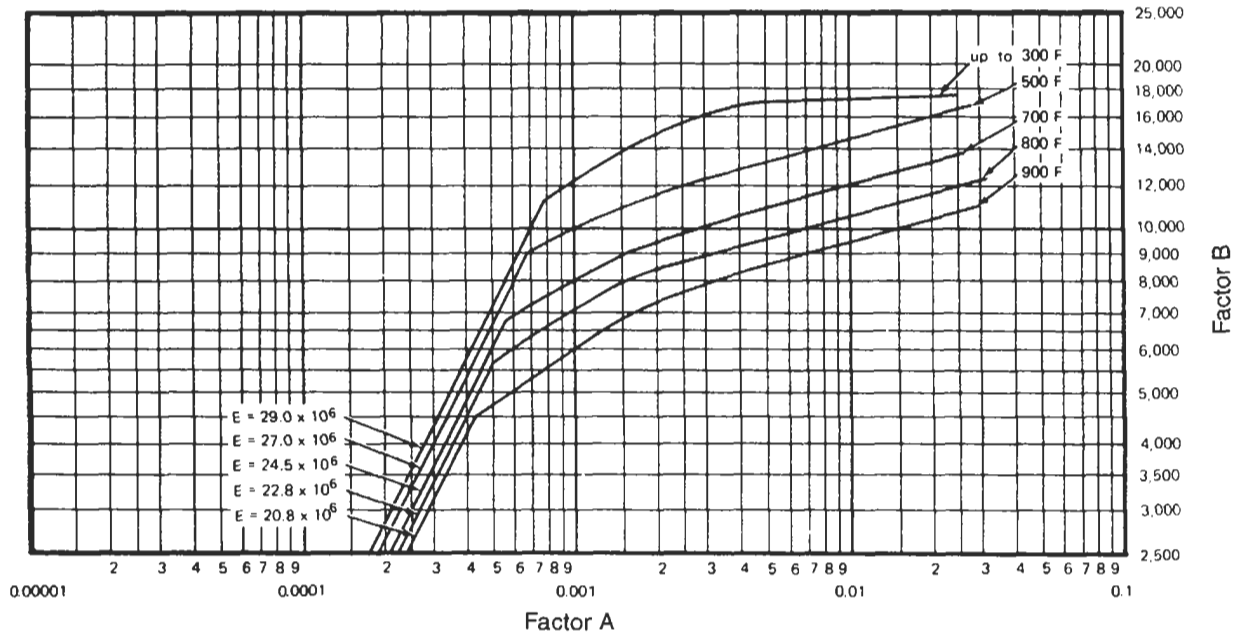

Figure 2-1g. Chart for determining shell thickness of components under external pressure when constructed of carbon or low-alloy steels (specified minimum yield strength 30,000 psi and over except materials within this range where other specific charts are referenced) and type 405 and type 410 stainless steels. (Reprinted by permission from the ASME Code, Section VIII, Div. 1.)

A to left of material line $P_a = \dfrac{0.0625E}{(R_o/t)^2}$

A to right of material line $P_a = \dfrac{Bt}{R_o}$

Notes

1. As an alternative, the thickness required for 2:1 S.E. heads for external pressure may be computed from the formula for internal pressure where $P = 1.67\,P_x$ and $E = 1.0$.

Table 2-1a
Maximum Length of Unstiffened Shells

	Thickness (in.)														
Diameter (in.)	1/4	5/16	3/8	7/16	1/2	9/16	5/8	11/16	3/4	13/16	7/8	15/16	1	1 1/16	1 1/8	1 3/16
36	204															
	∞															
42	168	280														
	313	∞														
48	142	235	358													
	264	437	∞													
54	122	203	306	437												
	228	377	∞													
60	104	178	268	381												
	200	330	499	∞												
66	91	157	238	336	458											
	174	293	442	626	∞											
72	79	138	213	302	408	537										
	152	263	396	561	∞											
78	70	124	193	273	369	483	616									
	136	237	359	508	686	∞										
84	63	110	175	249	336	438	559									
	123	212	327	462	625	816	∞									
90	57	99	157	228	308	402	510	637								
	112	190	300	424	573	748	∞									
96	52	90	143	210	284	370	470	585	715							
	103	173	274	391	528	689	875	∞								
102	48	82	130	190	263	343	435	540	661	795						
	94	160	249	363	490	639	810	1,005	∞							
108	44	76	118	176	245	320	405	502	613	738	875					
	87	148	228	337	456	594	754	935	∞							
114	42	70	109	162	223	299	379	469	571	687	816					
	79	138	211	311	426	555	705	874	1,064	∞						
120	39	65	101	149	209	280	355	440	536	642	762	894				
	74	128	197	287	400	521	660	819	997	∞						
126	37	61	95	138	195	263	334	414	504	603	715	839	974			
	69	120	184	266	374	490	621	770	938	1,124	∞					
132	35	57	88	129	181	242	315	391	475	569	673	789	916	1,053		
	65	113	173	248	348	462	586	727	884	1,060	1,253	∞				
138	33	54	83	121	169	228	297	369	449	538	636	744	864	994		
	62	106	163	234	325	437	555	687	836	1,002	1,185	∞				
144	31	51	78	114	158	214	275	350	426	510	603	705	817	940	1,073	
	59	98	154	221	304	411	526	652	793	950	1,123	1,312	∞			
150		49	74	107	148	201	261	332	405	485	573	669	774	891	1,017	1,152
		92	146	209	286	385	499	619	753	902	1,066	1,246	1,442	∞		
156		46	70	101	140	189	248	309	385	462	546	637	737	846	966	1,095
		87	138	199	271	363	475	590	717	859	1,015	1,186	1,373	∞		
162		44	67	96	133	178	233	294	367	440	520	608	703	806	919	1,042
		83	131	189	258	342	448	562	684	819	968	1,131	1,309	1,509	∞	
	1/4	5/16	3/8	7/16	1/2	9/16	5/8	11/16	3/4	13/16	7/8	15/16	1	1 1/16	1 1/8	1 3/16

Notes:

1. All values are in in.
2. Values are for temperatures up to 500°F.
3. Top value is for full vacuum, lower value is half vacuum.
4. Values are for carbon or low-alloy steel ($F_y > 30{,}000$ psi) based on Figure 2-1g.

Table 2-1b
Moment of Inertia of Bar Stiffeners

Thk t, in.	Max, ht, in.	Height, h, in.														
		1	1½	2	2½	3	3½	4	4½	5	5½	6	6½	7	7½	8
1/4	2	0.020 0.250	0.070 0.375	0.167 0.5												
5/16	2.5	0.026 0.313	0.088 0.469	0.208 0.625	0.407 0.781											
3/8	3	0.031 0.375	0.105 0.563	0.25 0.75	0.488 0.938	0.844 1.125										
7/16	3.5		0.123 0.656	0.292 0.875	0.570 1.094	0.984 1.313	1.563 1.531									
1/2	4		0.141 0.75	0.333 1.00	0.651 1.25	1.125 1.50	1.786 1.75	2.667 2.00								
9/16	4.5			0.375 1.125	0.732 1.406	1.266 1.688	2.00 1.969	3.00 2.25	4.271 2.53							
5/8	5				0.814 1.563	1.41 1.875	2.23 2.188	3.33 2.50	4.75 2.813	6.510 3.125						
11/16	5.5					1.55 2.063	2.46 2.406	3.67 2.75	5.22 3.094	7.16 3.438	9.53 3.78					
3/4	6					1.69 2.25	2.68 2.625	4.00 3.00	5.70 3.375	7.81 3.75	10.40 4.125	13.5 4.50				
1 3/16	6.5						2.90 2.844	4.33 3.25	6.17 3.656	8.46 4.063	11.26 4.469	14.63 4.875	18.59 5.281			
7/8	7							4.67 3.50	6.64 3.94	9.11 4.375	12.13 4.813	15.75 5.25	20.02 5.688	25.01 6.125		
1	8							5.33 4.00	7.59 4.50	10.42 5.00	13.86 5.50	18.00 6.00	22.89 6.50	28.58 7.00	35.16 7.50	42.67 8.00

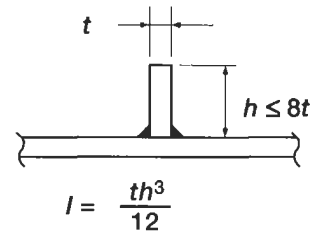

Note: Upper value in table is the moment of inertia. Lower value is the area.

Table 2-1c
Moment of Inertia of Composite Stiffeners

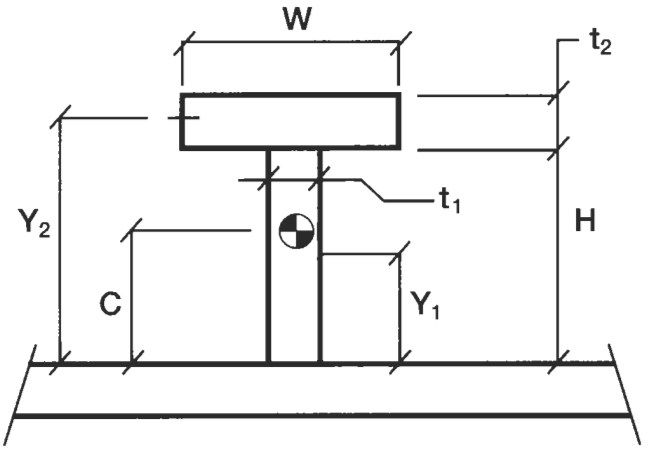

$$I_1 = \frac{t_1 H^3}{12}$$

$$I_2 = \frac{w t_2^3}{12}$$

$$c = \frac{\sum A_n Y_n}{\sum A}$$

$$I = \sum A_n Y_n^2 + \sum I - C \sum A_n Y_n$$

Type	H	W	t_1	t_2	$\sum A$	$\sum I$	C	I
1	3	3	0.375	0.5	2.63	0.87	2.50	2.84
2	3	4	0.5	0.5	3.50	1.17	2.50	−3.80
3	4	4	0.375	0.5	3.50	2.04	3.28	6.45
4	4	5	0.5	0.625	5.13	2.77	3.41	9.28
5	4.5	5	0.5	0.5	4.75	3.85	3.57	0.125
6	5	4	0.5	0.625	5.00	5.29	3.91	15.12
7	5.5	4	0.5	0.5	4.75	6.97	4.01	17.39
8	6	5	0.5	0.625	6.13	9.10	4.69	25.92
9	6	6	0.625	0.625	7.50	11.37	4.66	31.82
10	5.5	6	0.875	0.875	10.01	12.47	4.42	37.98
11	6.5	6	0.75	0.75	9.38	17.37	4.99	48.14
12	7	6	0.625	0.75	8.88	18.07	5.46	51.60
13	8	6	0.75	1	12.00	32.50	6.25	93.25
14	8	6	1	1	14.00	43.16	5.93	112.47

Moment of Inertia of Stiffening Rings

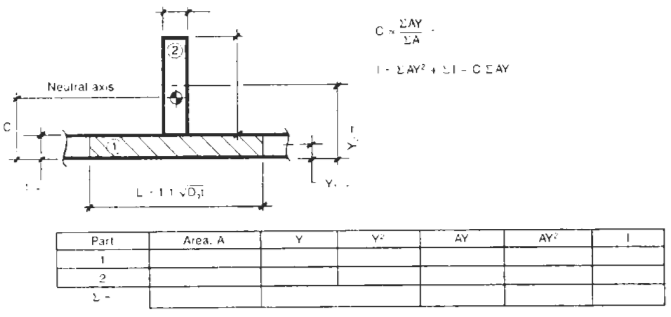

Figure 2-1h. Case 1: Bar-type stiffening ring.

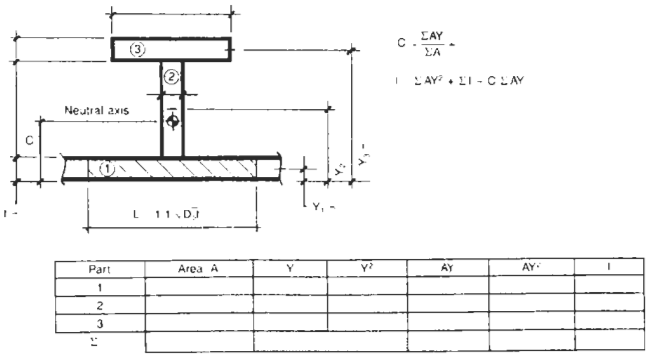

Figure 2-1i. Case 2: T-type stiffening ring.

STIFFENING RING CHECK FOR EXTERNAL PRESSURE

Ls		$B = 0.75\frac{PD_o}{t + A_s/L_s}$		Moment of inertia w/o shell $I_s = \frac{D_o^2 L_s(t + A_s/L_s)A}{14}$
t				
P		If $B \leq 2{,}500$ psi, $A = 2B/E$		Moment of inertia w/ shell $I'_s = \frac{D_o^2 L_s(t + A_s/L_s)A}{10.9}$
D_o				
A_s		If $B > 2{,}500$ psi, determine A from applicable material charts		
E = modulus of elasticity				

From Ref. 1, Section UG-29.

PROCEDURE 2-3

CALCULATE MAP, MAWP, AND TEST PRESSURES

Notation

S_a = allowable stress at ambient temperature, psi
S_{DT} = allowable stress at design temperature, psi
S_{CA} = allowable stress of clad material at ambient temperature, psi
S_{CD} = allowable stress of clad material at design temperature, psi
S_{BA} = allowable stress of base material at ambient temperature, psi
S_{BD} = allowable stress of base material at design temperature, psi
C.a. = corrosion allowance, in.
t_{sc} = thickness of shell, corroded, in.
t_{sn} = thickness of shell, new, in.
t_{hc} = thickness of head, corroded, in.
t_{hn} = thickness of head, new, in.
t_b = thickness of base portion of clad material, in.
t_c = thickness of cladding, in.
R_n = inside radius, new, in.
R_c = inside radius, corroded, in.
R_o = outside radius, in.
D_n = inside diameter, new, in.
D_c = inside diameter, corroded, in.
D_o = outside diameter, in.
P_M = MAP, psi
P_W = MAWP, psi
P = design pressure, psi
P_S = shop hydro pressure (new and cold), psi
P_F = field hydro pressure (hot and corroded), psi
E = joint efficiency, see Procedure 2-1 and Appendix C

Definitions

Maximum Allowable Working Pressure (MAWP): The MAWP for a vessel is the maximum permissible pressure at the top of the vessel in its normal operating position at a specific temperature, usually the design temperature. When calculated, the MAWP should be stamped on the nameplate. The MAWP is the maximum pressure allowable in the "hot and corroded" condition. It is the least of the values calculated for the MAWP of any of the essential parts of the vessel, and adjusted for any difference in static head that may exist between the part considered and the top of the vessel. This pressure is based on calculations for every element of the vessel using nominal thicknesses exclusive of corrosion allowance. It is the basis for establishing the set pressures of any pressure-relieving devices protecting the vessel. The design pressure may be substituted if the MAWP is not calculated.

The MAWP for any vessel part is the maximum internal or external pressure, including any static head, together with the effect of any combination of loadings listed in UG-22 which are likely to occur, exclusive of corrosion allowance at the designated coincident operating temperature. The MAWP for the vessel will be governed by the MAWP of the weakest part.

The MAWP may be determined for more than one designated operating temperature. The applicable allowable

stress value at each temperature would be used. When more than one set of conditions is specified for a given vessel, the vessel designer and user should decide which set of conditions will govern for the setting of the relief valve.

Maximum Allowable Pressure (MAP): The term MAP is often used. It refers to the maximum permissible pressure based on the weakest part in the new (uncorroded) and cold condition, and all other loadings are not taken into consideration.

Design Pressure: The pressure used in the design of a vessel component for the most severe condition of coincident pressure and temperature expected in normal operation. For this condition, and test condition, the maximum difference in pressure between the inside and outside of a vessel, or between any two chambers of a combination unit, shall be considered. Any thickness required for static head or other loadings shall be additional to that required for the design pressure.

Design Temperature: For most vessels, it is the temperature that corresponds to the design pressure. However, there is a maximum design temperature and a minimum design temperature for any given vessel. The minimum design temperature would be the MDMT (see Procedure 2-17). The MDMT shall be the lowest temperature expected in service or the lowest allowable temperature as calculated for the individual parts. Design temperature for vessels under external pressure shall not exceed the maximum temperatures given on the external pressure charts.

Operating Pressure: The pressure at the top of the vessel at which it normally operates. It shall be lower than the MAWP, design pressure, or the set pressure of any pressure relieving device.

Operating Temperature: The temperature that will be maintained in the metal of the part of the vessel being considered for the specified operation of the vessel.

Calculations

- *MAWP, corroded at Design Temperature P_w.*

  Shell:

$$Pw = \frac{S_{DT}Et_{sc}}{R_c + 0.6t_{sc}} \text{ or } \frac{S_{DT}Et_{sc}}{R_o - 0.4t_{sc}}$$

  2:1 S.E. Head:

$$Pw = \frac{2S_{DT}Et_{hc}}{D_c + 0.2t_{hc}} \text{ or } \frac{2S_{DT}Et_{hc}}{D_o - 1.8t_{hc}}$$

- *MAP, new and cold, P_M.*

  Shell:

$$P_M = \frac{S_aEt_{sn}}{R_n + 0.6t_{sn}} \text{ or } \frac{S_aEt_{sn}}{R_o - 0.4t_{sn}}$$

  2:1 S.E. Head:

$$P_M = \frac{2S_aEt_{hn}}{D_n + 0.2t_{hn}} \text{ or } \frac{2S_aEt_{hn}}{D_o - 1.8t_{hn}}$$

- *Shop test pressure, P_S.*

$$P_s = 1.3P_M \text{ or } 1.3P_W\left[\frac{S_a}{S_{DT}}\right]$$

- *Field test pressure, P_F.*

$$P_F = 1.3P$$

- *For clad vessels where credit is taken for the clad material, the following thicknesses may be substituted into the equations for MAP and MAWP:*

$$t_{sc},t_{hc} = t_b + \left[\frac{S_{CD}}{S_{BD}}(t_c - C.a.)\right]$$

$$t_{sn},t_{hn} = t_b + \left[\frac{S_{CA}t_c}{S_{BA}}\right]$$

Notes

1. Also check the pressure-temperature rating of the flanges for MAWP and MAP.
2. All nozzles should be reinforced for MAWP.
3. The MAP and MAWP for other components, i.e., cones, flat heads, hemi-heads, torispherical heads, etc., may be checked in the same manner by using the formula for pressure found in Procedure 2-1 and substituting the appropriate terms into the equations.
4. It is not necessary to take credit for the cladding thickness. If it is elected not to take credit for the cladding thickness, then base all calculations on the full base metal thickness. This assumes the cladding is equivalent to a corrosion allowance, and no credit is taken for the strength of the cladding.

PROCEDURE 2-4

STRESSES IN HEADS DUE TO INTERNAL PRESSURE [2, 3]

Notation

L = crown radius, in.
r = knuckle radius, in.
h = depth of head, in.
R_L = latitudinal radius of curvature, in.
R_m = meridional radius of curvature, in.
σ_ϕ = latitudinal stress, psi
σ_x = meridional stress, psi
P = internal pressure, psi

Formulas

Lengths of R_L and R_m for ellipsoidal heads:

- At equator:

$$R_m = \frac{h^2}{R}$$
$$R_L = R$$

- At center of head:

$$R_m = R_L = \frac{R^2}{h}$$

- At any point X:

$$R_L = \sqrt{\frac{R^4}{h^2} + X^2\left(1 - \frac{R^2}{h^2}\right)}$$
$$R_m = \frac{R_L^3 h^2}{R^4}$$

Notes

1. Latitudinal (hoop) stresses in the knuckle become compressive when the R/h ratio exceeds 1.42. These heads will fail by either elastic or plastic buckling, depending on the R/t ratio.
2. Head types fall into one of three general categories: hemispherical, torispherical, and ellipsoidal. Hemispherical heads are analyzed as spheres and were covered in the previous section. Torispherical (also known as flanged and dished heads) and ellipsoidal head formulas for stress are outlined in the following form.

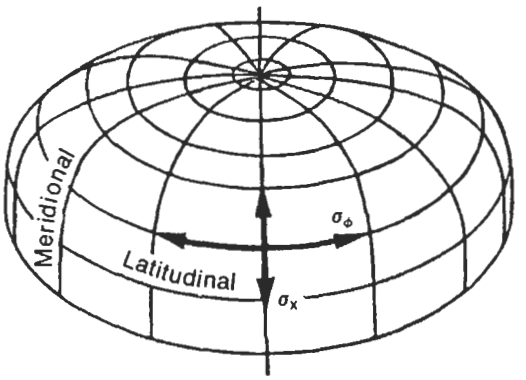

Figure 2-2. Direction of stresses in a vessel head.

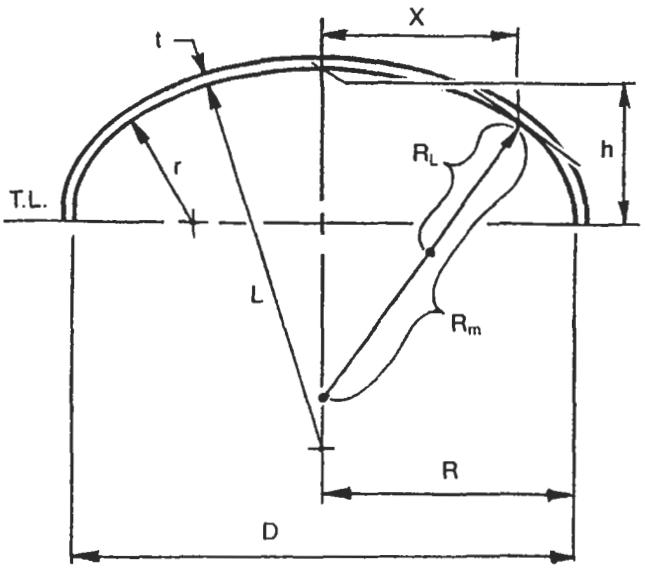

Figure 2-3. Dimensional data for a vessel head.

TORISPHERICAL HEADS			
σ_x		σ	
At Junction of Crown and Knuckle			
$\sigma_x = \frac{PL}{2t}$		$\sigma_\phi = \frac{PL}{4t}\left(3 - \frac{L}{R}\right)$	
In Crown			
$\sigma_x = \frac{PL}{2t}$		$\sigma_\phi = \sigma_x$	
In Knuckle			
$\sigma_x = \frac{PL}{2t}$		$\sigma_\phi = \frac{PL}{t}\left(1 - \frac{L}{2r}\right)$	
At Tangent Line			
$\sigma_x = \frac{PR}{2t}$		$\sigma_\phi = \frac{PR}{t}$	

ELLIPSOIDAL HEADS			
σ_x		σ	
At Any Point X			
$\sigma_x = \frac{PR_L}{2t}$		$\sigma_\phi = \frac{PR_t}{t}\left(1 - \frac{R_L}{2R_m}\right)$	
At Center of Head			
$\sigma_x = \frac{PR^2}{2th}$		$\sigma_\phi = \sigma_x$	
At Tangent Line			
$\sigma_x = \frac{PR}{2t}$		$\sigma_\phi = \frac{PR}{t}\left(1 - \frac{R^2}{2h^2}\right)$	

PROCEDURE 2-5

DESIGN OF INTERMEDIATE HEADS [1, 3]

Notation

A = factor A for external pressure
A_s = shear area, in.^{2}
B = allowable compressive stress, psi
F = load on weld(s), lb/in.
τ = shear stress, psi
E = joint efficiency
E_1 = modulus of elasticity at temperature, psi
S = code allowable stress, psi
H_D = hydrostatic end force, lb
P_i = maximum differential pressure on concave side of head, psi
P_e = maximum differential pressure on convex side of head, psi
K = spherical radius factor (see Table 2-2)
L = inside radius of hemi-head, in.
= 0.9D for 2:1 S.E. heads, in.
= KD for ellipsoidal heads, in.
= crown radius of F & D heads, in.

Table 2-2
Spherical Radius Factor, K

$\frac{D}{2h}$	1.0	1.2	1.4	1.6	1.8	2.0	2.2	2.4	2.6	2.8	3.0
K	.5	.57	.65	.73	.81	.9	.99	1.08	1.18	1.27	1.36

Reprinted by permission from ASME Code Section VIII Div. 1, Table UG-33.1.

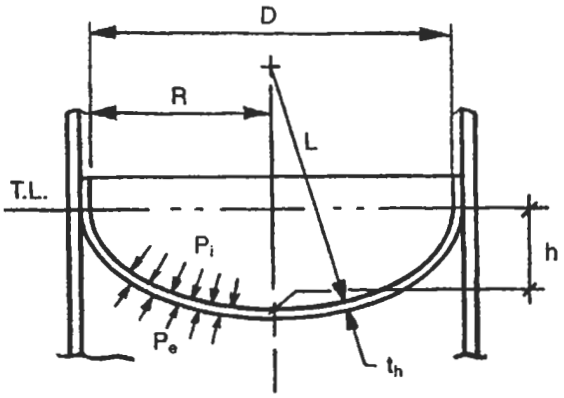

Figure 2-4. Dimensional data for an intermediate head.

Required Head Thickness, t_r

- *Internal pressure, P_i.* Select appropriate head formula based on head geometry. For dished only heads as in Figure 2-5, Case 3:

$$t_r = \frac{5P_iL}{6S}$$

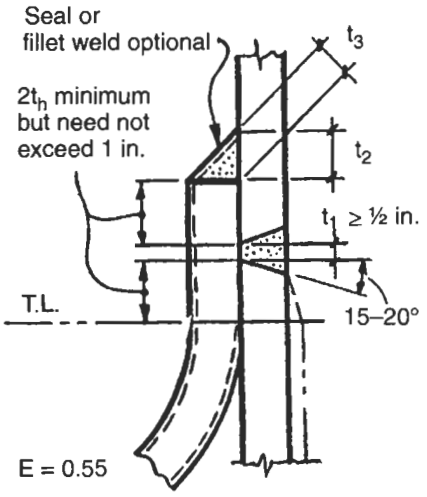

$A_s = t_1$ + lesser of t_2 or t_3

Case 1

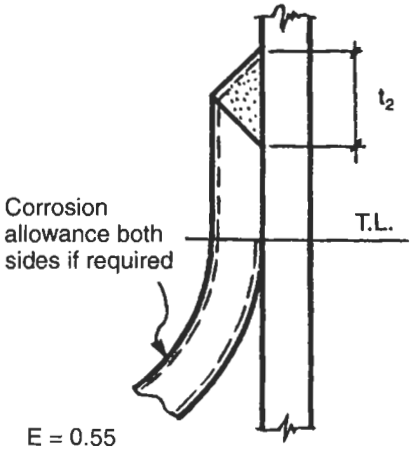

$A_s = t_2$

Case 2

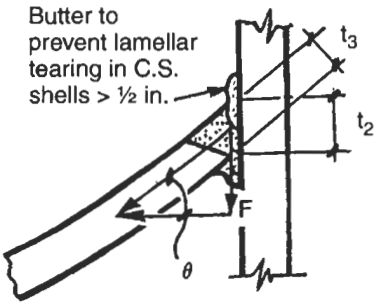

$$\sin\theta = \frac{D}{2L + t}$$

A_s = lesser of t_2 or t_3

E = 0.7 (butt weld)

Case 3

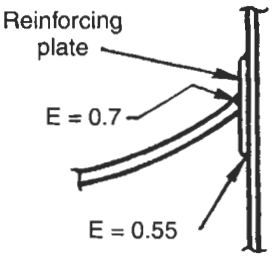

Design the weld attaching the head as in Case 3 and the welds attaching the reinforcing plate to share full load

Case 3 Alternate

Figure 2-5. Methods of attachment of intermediate heads.

- *External pressure, P_e.* Assume corroded head thickness, t_h

$$\text{Factor A} = \frac{0.125 t_h}{L}$$

Factor B can be taken from applicable material charts in Section II, Part D, Subpart 3 of Reference 1.
Alternatively (or if Factor A lies to the left of the material/temperature line):

$$B = \frac{AE_1}{2}$$

$$t_r = \frac{P_e L}{B}$$

The required head thickness shall be the greater of that required for external pressure or that required for an internal pressure equal to $1.67 \times P_e$. See Reference 1, Para. UG-33(a).

Shear Stress

- *Hydrostatic end force, H_D.*

$$H_D = \frac{P\pi D^2}{4}$$

where $P = 1.5 \times$ greater of P_i or P_e. (See Reference 1, Figure UW-13.1.)

- *Shear loads on welds, F.*

$$F = \frac{H_D}{\pi D \sin\theta}$$

Note: $\sin\theta$ applies to Figure 2-5, Case 3 head attachments only!

- *Shear stress, τ.*

$$\tau = \frac{F}{A_s}$$

- *Allowable shear stress, SE.*

PROCEDURE 2-6

DESIGN OF TORICONICAL TRANSITIONS [1, 3]

Notation

P = internal pressure, psi
S = allowable stress, psi
E = joint efficiency
P_1, P_2 = equivalent internal pressure, psi
f_1, f_2 = longitudinal unit loads, lb/in.
σ_1, σ_2 = circumferential membrane stress, psi
α = half apex angle, deg
m = code correction factor for thickness of large knuckle
P_x = external pressure, psi
M_1, M_2 = longitudinal bending moment at elevation, in.-lb
W_1, W_2 = dead weight at elevation, lb

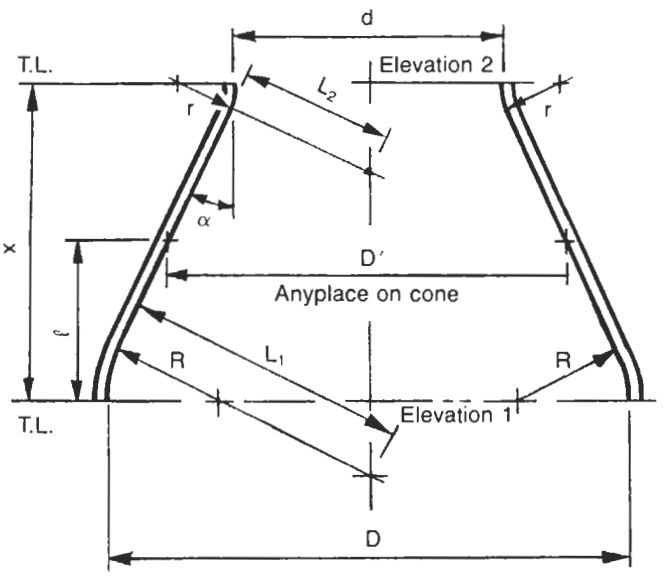

Figure 2-6. Dimensional data for a conical transition.

Calculating Angle, α

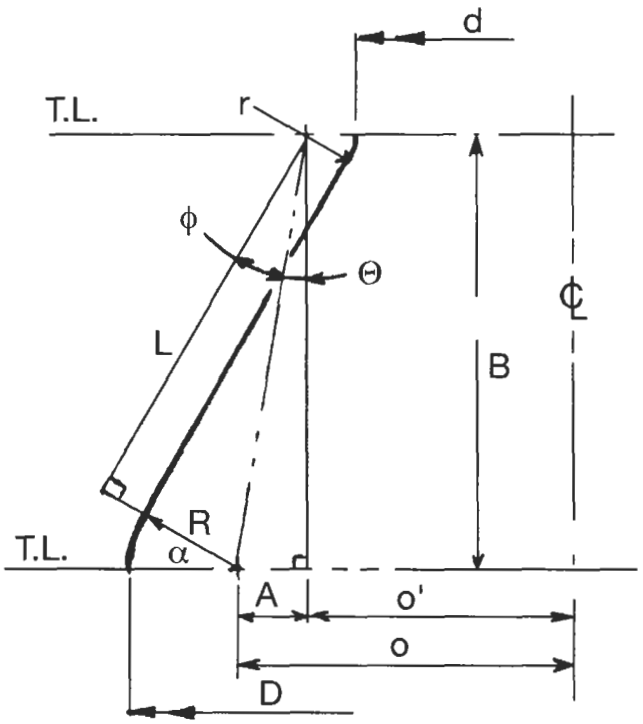

Case 1

$o > o'$

Step 1:

$$\sin\phi = \frac{R + r}{\sqrt{A^2 + B^2}} =$$

$$\phi = \text{————}$$

Step 2:

$$\tan\Theta = \frac{A}{B}$$

$$\Theta = \text{————}$$

Step 3:

$$\alpha = \phi + \Theta$$

$$\alpha = \text{————}$$

$$L = \cos\phi\sqrt{A^2 + B^2}$$

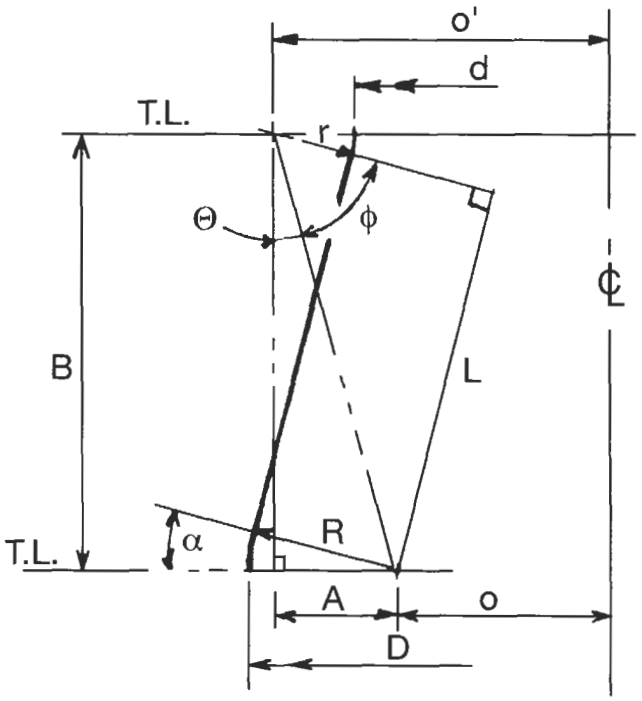

Case 2

$o' > o$

Step 1:

$$\cos\phi = \frac{R + r}{\sqrt{A^2 + B^2}} =$$

$$\phi = \text{————}$$

Step 2:

$$\tan\Theta = \frac{A}{B}$$

$$\Theta = \text{————}$$

Step 3:

$$\alpha = 90 - \Theta - \phi$$

$$\alpha = \text{————}$$

$$L = \sin\phi\sqrt{A^2 + B^2}$$

Dimensional Formulas

$$D_1 = D - 2(R - R\cos\alpha)$$

$$D_2 = D + 2(R - R\cos\alpha)$$

$$D' = D - 2R\left(1 - \frac{1}{\cos\alpha}\right) - 2\ell\tan\alpha$$

$$L_1 = \frac{D_1}{2\cos\alpha}$$

$$L_2 = \frac{D_2}{2\cos\alpha}$$

$$m = 0.25\left(3 + \sqrt{\frac{L_1}{R}}\right)$$

Large End (Figure 2-7)

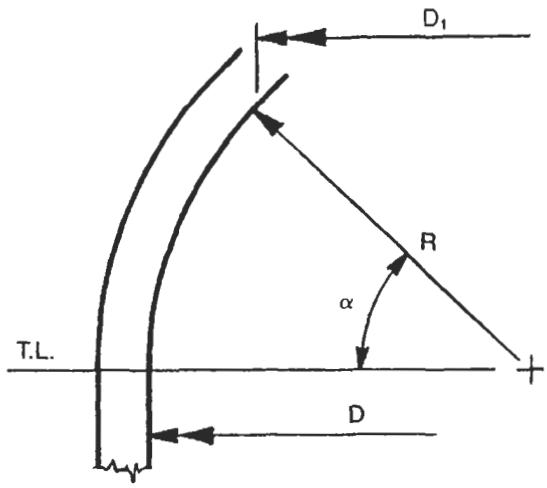

Figure 2-7. Dimensional data for the large end of a conical transition.

- *Maximum longitudinal loads, f_1.*

  (+) tension; (−) compression

$$f_1 = \frac{-W_1}{\pi D_1} \pm \frac{4M_1}{\pi D_1^2}$$

- *Determine equivalent pressure, P_1.*

$$P_1 = P + \frac{4f_1}{D_1}$$

- *Circumferential stress, D_1.*

  Compression:

$$\sigma_1 = \frac{PL_1}{t} - \frac{P_1L_1}{t}\left[\frac{L_1}{2R}\right]$$

- *Circumferential stress at D_1 without loads, σ_1.*

  Compression:

$$\sigma_1 = \frac{PL_1}{t}\left(1 - \frac{L_1}{2R}\right)$$

- *Thickness required knuckle, t_{rk}* [1, section 1-4(d)].

  With loads:

$$t_{rk} = \frac{P_1L_1m}{2SE - 0.2P_1}$$

  Without loads:

$$t_{rk} = \frac{PL_1m}{2SE - 0.2P}$$

- *Thickness required cone, t_{rc}* [1, section UG-32(g)].

  With loads:

$$t_{rc} = \frac{P_1D_1}{2\cos\alpha(SE - 0.6P_1)}$$

  Without loads:

$$t_{rc} = \frac{PD_1}{2\cos\alpha(SE - 0.6P)}$$

Small End (Figure 2-8)

- *Maximum longitudinal loads, f_2.*

  (+) tension; (−) compression

$$f_2 = \frac{-W_2}{\pi D_2} \pm \frac{4M_2}{\pi D_2^2}$$

- *Determine equivalent pressure, P_2.*

$$P_2 = P + \frac{4f_2}{D_2}$$

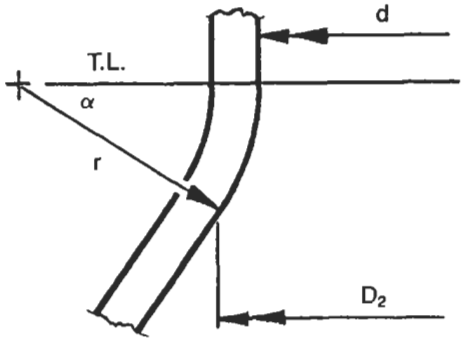

Figure 2-8. Dimensional data for the small end of a conical transition.

- *Circumferential stress at D_2.*

  Compression:

$$\sigma_2 = \frac{PL_2}{t} + \frac{P_2L_2}{t}\left[\frac{L_2}{2r}\right]$$

- *Circumferential stress at D_2 without loads, σ_2.*

  Compression:

$$\sigma_2 = \frac{PL_2}{t}\left(1 - \frac{L_2}{2r}\right)$$

- *Thickness required cone, at D_2, t_{rc}* [1, section UG-32(g)].

  With loads:

$$t_{rc} = \frac{P_2D_2}{2\cos\alpha(SE - 0.6P_2)}$$

  Without loads:

$$t_{rc} = \frac{PD_2}{2\cos\alpha(SE - 0.6P)}$$

- *Thickness required knuckle.* There is no requirement for thickness of the reverse knuckle at the small end of the cone. For convenience of fabrication it should be made the same thickness as the cone.

Additional Formulas (Figure 2-9)

- *Thickness required of cone at any diameter D', $t_{D'}$.*

$$t_{D'} = \frac{PD'}{2\cos\alpha(SE - 0.6P)}$$

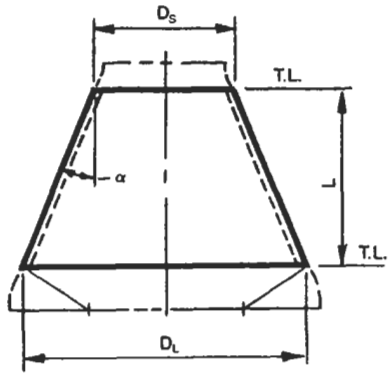

Figure 2-9. Dimensional data for cones due to external pressure.

- *Thickness required for external pressure* [1, section UG-33(f)].

$$t_e = t\cos\alpha$$
$$D_L = D_2 + 2t_e$$
$$D_s = D_1 + 2t_e$$
$$L = X - \sin\alpha(R + t) - \sin\alpha(r - t)$$
$$L_e = \frac{L}{2}\left(1 + \frac{D_s}{D_L}\right)$$
$$\frac{L_e}{D_L} =$$
$$\frac{D_L}{t_e} =$$

Using these values, use Figure 2-1e to determine Factor A.

- *Allowable external pressure, P_a.*

$$P_a = \frac{2AEt_e}{D_L}; \quad P_a > P_x$$

where E = modulus of elasticity at design temperature.

Notes

1. *Allowable stresses.* The maximum stress is the compressive stress at the tangency of the large knuckle and the cone. Failure would occur in local yielding rather than buckling; therefore the allowable stress should be the same as required for cylinders. Thus the allowable circumferential compressive stress should be the lesser of 2SE or F_y. Using a lower allowable stress would require the knuckle radius to be made very large—well above code requirements. See Reference 3.
2. Toriconical sections are mandatory if angle α exceeds 30° unless the design complies with Para. 1-5(e) of the

ASME Code [1]. This paragraph requires a discontinuity analysis of the cone-shell juncture.

3. No reinforcing rings or added reinforcement is required at the intersections of cones and cylinders, providing a knuckle radius meeting ASME Code requirements is used. The minimum knuckle radius for the large end is not less than the greater of 3t or 0.12(R + t). The knuckle radius of the small end (flare) has no minimum. (See [Reference 1, Figure UG-36]).
4. Toriconical transitions are advisable to avoid the high discontinuity stresses at the junctures for the following conditions:
   a. High pressure—greater than 300 psig.
   b. High temperature—greater than 450 or 500°F.
   c. Low temperature—less than −20°F.
   d. Cyclic service (fatigue).

PROCEDURE 2-7

DESIGN OF FLANGES [1, 4]

Notation

A = flange O.D., in.
A_b = cross-sectional area of bolts, in.^{2}
A_m = total required cross-sectional area of bolts, in.^{2}
a = nominal bolt diameter, in.
B = flange I.D., in. (see Note 6)
B_1 = flange I.D., in. (see Note 6)
B_s = bolt spacing, in.
b = effective gasket width, in.
b_o = gasket seating width, in.
C = bolt circle diameter, in.
d = hub shape factor
d_1 = bolt hole diameter, in.
E, h_D, h_G, h_T, R = radial distances, in.
e = hub shape factor
F = hub shape factor for integral-type flanges
F_L = hub shape factor for loose-type flanges
f = hub stress correction factor for integral flanges
G = diameter at gasket load reaction, in.
g_o = thickness of hub at small end, in.
g_1 = thickness of hub at back of flange, in.
H = hydrostatic end force, lb
H_D = hydrostatic end force on area inside of flange, lb
H_G = gasket load, operating, lb
H_p = total joint-contact surface compression load, lb
H_T = pressure force on flange face, lb
h = hub length, in.
h_o = hub factor
M_D = moment due to H_D, in.-lb
M_G = moment due to H_G, in.-lb
M_o = total moment on flange, operating, in.-lb
M'_o = total moment on flange, seating
M_T = moment due to H_T, in.-lb
m = gasket factor (see Table 2-3)
m_o = unit load, operating, lb
m_g = unit load, gasket seating, lb
N = width of gasket, in. (see Table 2-4)
w = width of raised face or gasket contact width, in. (see Table 2-4)
n = number of bolts
ν = Poisson's ratio, 0.3 for steel
P = design pressure, psi
S_a = allowable stress, bolt, at ambient temperature, psi
S_b = allowable stress, bolt, at design temperature, psi
S_{fa} = allowable stress, flange, at ambient temperature, psi
S_{fo} = allowable stress, flange, at design temperature, psi
S_H = longitudinal hub stress, psi
S_R = radial stress in flange, psi
S_T = tangential stress in flange, psi T, U, Y
Z = K-factors (see Table 2-5)
T_r, U_r, Y_r = K-factors for reverse flanges
t = flange thickness, in.
t_n = pipe wall thickness, in.
V = hub shape factor for integral flanges
V_L = hub shape factor for loose flanges
W = flange design bolt load, lb
W_{m1} = required bolt load, operating, lb
W_{m2} = required bolt load, gasket seating, lb
y = gasket design seating stress, psi

Formulas

$$h_D = \frac{C - \text{dia. } H_D}{2}$$

$$h_T = \frac{C - \text{dia. } H_T}{2}$$

$$h_G = \frac{C - G}{2}$$

$$h_o = \sqrt{B\, g_o}$$

$$H_D = \frac{\pi B^2 P}{4}$$

$$H_T = H - H_D$$

H_G = operating = $W_{m1} - H$
gasket seating = W

$$H = \frac{G^2 \pi P}{4}$$

$$m_o = \frac{M_o}{B}$$

$$m_G = \frac{M_G}{B}$$

$$M_D = H_D h_D$$

$$M_T = H_T h_T$$

$$M_G = W h_G$$

$$E = \frac{A - C}{2}$$

$$K = \frac{A}{B}$$

$$T = \frac{(1 - \nu^2)(K^2 - 1)U}{(1 - \nu) + (1 + \nu)K^2}$$

$$Z = \frac{K^2 + 1}{K^2 - 1}$$

$$Y = (1 - \nu^2)U$$

$$U = \frac{K^2\left(1 + 4.6052\ (1 + \nu/1 - \nu)\log_{10} K\right) - 1}{1.0472(K^2 - 1)(K - 1)(1 + \nu)}$$

B_1 = loose flanges = $B + g_1$
= integral flanges, $f < 1 = B + g_1$
= integral flanges, $f \geq 1 = B + g_o$

$$d = \text{loose flanges} = \frac{U h_o g_o^2}{V_L}$$
$$= \text{integral flanges} = \frac{U h_o g_o^2}{V}$$
$$= \text{reverse flanges} = \frac{U_r h_o g_o^2}{V}$$

$$e = \text{loose flanges} = \frac{F_L}{h_o}$$
$$= \text{integral flanges} = \frac{F}{h_o}$$

G = (if $b_o \leq 0.25$ in.) mean diameter of gasket face
= (if $b_o > 0.25$ in.) O.D. of gasket contact face − 2b

Stress Formula Factors

$$\alpha = te + 1$$

$$\beta = 1.333\, te + 1$$

$$\delta = \frac{t^3}{d}$$

$$\gamma = \frac{\alpha}{T} \text{ or } \frac{\alpha}{T_r} \text{ for reverse flanges}$$

$$\lambda = \gamma + \delta$$

$$\alpha_R = \frac{1}{K^2}\left[1 + \frac{3(K+1)(1-\nu)}{\pi Y}\right]$$

For factors, F, U, F_L, and U_L, see Table 2-7.1 of the ASME Code [1].

Special Flanges

Special flanges that are required to be designed should only be used as a last resort. Whenever possible, standard flanges should be utilized. In general, special designs as outlined in this procedure are done for large or high-pressure designs. Flanges in this category will be governed by one of two conditions:

1. Gasket seating force, W_{m2}
2. Hydrostatic end force, H

For high-pressure flanges, typically the hydrostatic end force, H, will govern. For low-pressure flanges, the gasket seating force will govern. Therefore the strategy for approaching the design of these flanges will vary. The strategy is as follows:

- *For low-pressure flanges*
  a. Minimize the gasket width to reduce the force necessary to seat the gasket.
  b. Use a larger number of smaller diameter bolts to minimize the bolt circle diameter and thus reduce the moment arm which governs the flange thickness.
  c. Utilize hubless flanges (either lap joint or plate flanges) to minimize the cost of forgings.

- *For high-pressure flanges*
  High-pressure flanges require a large bolt area to counteract the large hydrostatic end force. Large bolts, in turn, increase the bolt circle with a corresponding increase in the moment arm. Thicker flanges and large hubs are necessary to distribute the bolt loads. Seek a balance between the quantity and size of bolts, bolt spacing, and bolt circle diameter.

Design Strategy

Step 1: Determine the number and size of bolts required. As a rule of thumb, start with a number of bolts equal to the nominal size of the bore in inches, rounded to the nearest multiple of four. First, calculate W_{m1} or W_{m2}. A_m is equal to the larger of W_{m1} or W_{m2} divided by S_a. The quantity of bolts required is:

$$n = A_m/R_a$$

To find the size of bolt for a given quantity:

$$R_a = A_m/n$$

With these two equations a variety of combinations can be determined.

Step 2: Determine the bolt circle diameter for the selected bolt size.

$$C = B + 2_{gJ} + 2R$$

The flange O.D. may now be established.

$$A = C + 2E$$

Step 3: Check the minimum bolt spacing (not an ASME requirement). Compare with the value of B_s in Table 2-5a.

$$B_s = C/n$$

Note: Dimensions R_a, R, E, and B_s are from Table 2-5a.

Step 4: After all of the preliminary dimensions and details are selected, proceed with the detailed analysis of the flange by calculating the balance of forces, moments, and stresses in the appropriate design form.

Gasket Facing and Selection

The gasket facing and type correspond to the service conditions, fluid or gas handled, pressure, temperature, thermal shock, cyclic operation, and the gasket selection. The greater the hazard, the more care that should be invested in the decisions regarding gasket selection and facing details.

Facings which confine the gasket, male and female, tongue and groove and ring joint offer greater security against blowouts. Male and female and tongue and groove have the disadvantage that mating flanges are not alike. These facings, which confine the gasket, are known as enclosed gaskets and are required for certain services, such as TEMA Class "R."

For tongue and groove flanges, the tongue is more likely to be damaged than the groove; therefore, from a maintenance standpoint, there is an advantage in placing the tongue on the part which can be transported for servicing, i.e., blind flanges, manway heads, etc. If the assembly of these joints is horizontal then there will be less difficulty if the groove is placed in the lower side of the joint. The gasket width should be made equal to the width of the tongue. Gaskets for these joints are typically metal or metal jacketed.

TYPE 1: WELD NECK FLANGE DESIGN (INTEGRAL)

1	DESIGN CONDITIONS					
Design pressure, P		Allowable Stresses				
Design temperature		Flange			Bolting	
Flange material		Design temp., S_{fo}			Design temp., S_b	
Bolting material		Atm. temp., S_{fa}			Atm. temp., S_a	
Corrosion allowance						

2	GASKET AND FACING DETAILS		
Gasket		Facing	

3	TABLES 2-3 AND 2-4	4	LOAD AND BOLT CALCULATIONS		
N		$W_{m2} = b\pi Gy$		A_m = greater of W_{m2}/S_a or W_{m1}/S_b	
b		$H_P = 2b\pi GmP$			
G		$H = G^2\pi P/4$		A_b	
y		$W_{m1} = H_P + H$		$W = 0.5(A_m + A_b)S_a$	
m					

5	MOMENT CALCULATIONS			
Load	×	Lever Arm	=	Moment
Operating				
$H_D = \pi B^2P/4$		$h_D = R + 0.5g_1$		$M_D = H_Dh_D$
$H_G = W_{m1} - H$		$h_G = 0.5(C - G)$		$M_G = H_Gh_G$
$H_T = H - H_D$		$h_T = 0.5(R + g_1 + h_G)$		$M_T = H_Th_T$
				M_o
Seating				
$H_G = W$		$h_G = 0.5(C - G)$		M_o'

6	K AND HUB FACTORS		
K = A/B		h/h_o	
T		F	
Z		V	
Y		f	
U		$e = F/h_o$	
g_1/g_o		$d = \frac{U}{V} h_og_o^2$	
$h_o = \sqrt{Bg_o}$			

7	STRESS FORMULA FACTORS		
t			
$\alpha = te + 1$			
$\beta = 4/3\ te + 1$			
$\gamma = \alpha/T$			
$\delta = t^3/d$			
$\lambda = \gamma + \delta$			
$m_o = M_o/B$			
$m_G = M_o'/B$			

If bolt spacing exceeds 2a + t, multiply m_o and m_G in above equation by: $\sqrt{\frac{\text{Bolt spacing}}{2a + t}}$

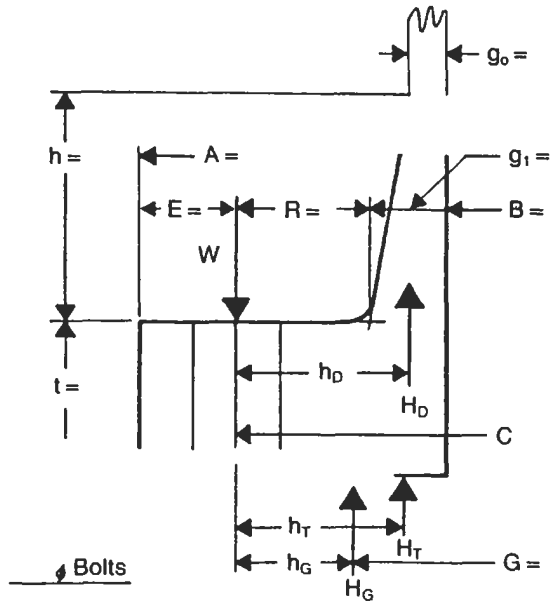

Figure 2-10. Dimensional data and forces for a weld neck flange (integral).

8	STRESS CALCULATIONS				
Allowable Stress	Operating		Allowable Stress	Seating	
1.5 S_{fo}	Longitudinal hub, $S_H = fm_o/\lambda g_1^2$		1.5 S_{fa}	Longitudinal hub, $S_H = fm_G/\lambda g_1^2$	
S_{fo}	Radial flange, $S_R = \beta m_o/\lambda t^2$		S_{fa}	Radial flange, $S_R = \beta m_G/\lambda t^2$	
S_{fo}	Tangential flange, $S_T = m_oY/t^2 - ZS_R$		S_{fa}	Tangential flange, $S_T = m_GY/t^2 - ZS_R$	
S_{fo}	Greater of $0.5(S_H + S_R)$ or $0.5(S_H + S_T)$		S_{fa}	Greater of $0.5(S_H + S_R)$ or $0.5(S_H + S_T)$	

Adapted from Taylor Forge International, Inc., by permission.

TYPE 2: SLIP-ON FLANGE DESIGN (LOOSE)

1 DESIGN CONDITIONS

Design pressure, P		Allowable Stresses			
Design temperature		Flange		Bolting	
Flange material		Design temp., S_{fo}		Design temp., S_b	
Bolting material		Atm. temp., S_{fa}		Atm. temp., S_a	
Corrosion allowance					

2 GASKET AND FACING DETAILS

Gasket		Facing	

3 TABLES 2-3 AND 2-4

N	
b	
G	
y	
m	

4 LOAD AND BOLT CALCULATIONS

$W_{m2} = b\pi Gy$		A_m = greater of W_{m2}/S_a or W_{m1}/S_b	
$H_P = 2b\pi GmP$		A_b	
$H = G^2\pi P/4$		$W = 0.5(A_m + A_b)S_a$	
$W_{m1} = H_P + H$			

5 MOMENT CALCULATIONS

Load		× Lever Arm		= Moment	
Operating					
$H_D = \pi B^2P/4$		$h_D = R + g_1$		$M_D = H_Dh_D$	
$H_G = W_{m1} - H$		$h_G = 0.5(C - G)$		$M_G = H_Gh_G$	
$H_T = H - H_D$		$h_T = 0.5(R + g_1 + h_G)$		$M_T = H_Th_T$	
				M_o	
Seating					
$H_G = W$		$h_G = 0.5(C - G)$		M'_o	

6 K AND HUB FACTORS

$K = A/B$		h/h_o	
T		F_L	
Z		V_L	
Y			
U		$e = \frac{F_L}{h_o}$	
g_1/g_o		$d = \frac{U}{V} h_o g_o^2$	
$h_o = \sqrt{Bg_o}$			

7 STRESS FORMULA FACTORS

t			
$\alpha = te + 1$			
$\beta = 4/3\ te + 1$			
$\gamma = \alpha/T$			
$\delta = t^3/d$			
$\lambda = \gamma + \delta$			
$m_o = M_o/B$			
$m_G = M'_o/B$			

If bolt spacing exceeds 2a + t, multiply m_o and m_g in above equation by: $\sqrt{\frac{\text{Bolt spacing}}{2a + t}}$

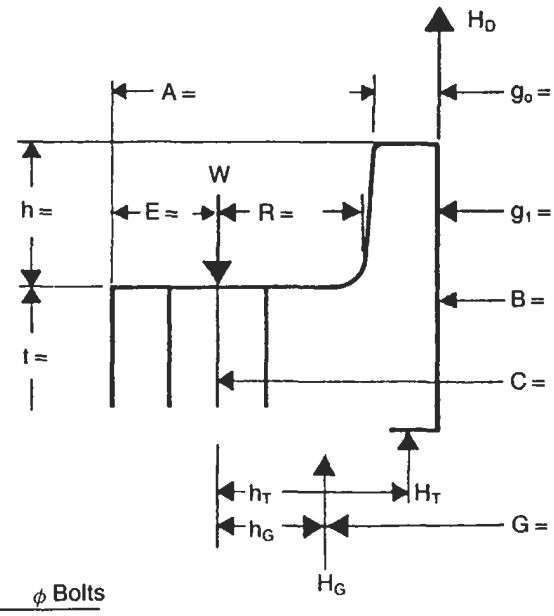

Figure 2-11. Dimensional data and forces for a slip-on flange (loose).

8 STRESS CALCULATIONS

Allowable Stress	Operating		Allowable Stress	Seating	
1.5 S_{fo}	Longitudinal hub, $S_H = m_o/\lambda g_1^2$		1.5 S_{fa}	Longitudinal hub, $S_H = m_G/\lambda g_1^2$	
S_{fo}	Radial flange, $S_R = \beta m_o/\lambda t^2$		S_{fa}	Radial flange, $S_R = \beta m_G/\lambda t^2$	
S_{fo}	Tangential flange, $S_T = m_oY/t^2 - ZS_R$		S_{fa}	Tangential flange, $S_T = m_GY/t^2 - ZS_R$	
S_{fo}	Greater of $0.5(S_H + S_R)$ or $0.5(S_H + S_T)$		S_{fa}	Greater of $0.5(S_H + S_R)$ or $0.5(S_H + S_T)$	

Adapted from Taylor Forge International, Inc., by permission.

TYPE 3: RING FLANGE DESIGN

1 DESIGN CONDITIONS

Design pressure, P		Allowable Stresses			
Design temperature		Flange		Bolting	
Flange material		Design temp., S_{fo}		Design temp., S_b	
Bolting material		Atm. temp., S_{fa}		Atm. temp., S_a	
Corrosion allowance					

2 GASKET AND FACING DETAILS

Gasket		Facing	

3 TABLES 2-3 AND 2-4		4 LOAD AND BOLT CALCULATIONS			
N		$W_{m2} = b\pi Gy$		A_m = greater of W_{m2}/S_a or W_{m1}/S_b	
b		$H_P = 2b\pi GmP$			
G		$H = G^2\pi P/4$		A_b	
y		$W_{m1} = H_P + H$		$W = 0.5(A_m + A_b)S_a$	
m					

5 MOMENT CALCULATIONS

Load		×	Lever Arm		=	Moment	
Operating							
$H_D = \pi B^2P/4$			$h_D = 0.5(C - B)$			$M_D = H_Dh_D$	
$H_G = W_{m1} - H$			$h_G = 0.5(C - G)$			$M_G = H_Gh_G$	
$H_T = H - H_D$			$h_T = 0.5(h_D + h_G)$			$M_T = H_Th_T$	
						M_o	
Seating							
$H_G = W$			$h_G = 0.5(C - G)$			M_o'	

6 SHAPE CONSTANTS

K = A/B		Y	

If bolt spacing exceeds 2a + t, multiply M_o and M_o' in above equation by: $\sqrt{\frac{\text{Bolt spacing}}{2a + t}}$

7 FLANGE THICKNESS REQUIRED

t = greater of

Operating	Seating
$t = \sqrt{\frac{M_oY}{S_{fo}B}}$	$t = \sqrt{\frac{M_o'Y}{S_{fa}B}}$

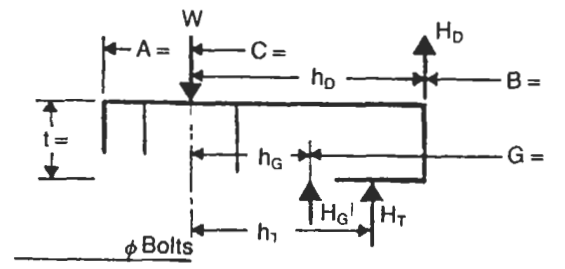

Figure 2-12. Dimensional data and forces for a ring flange.

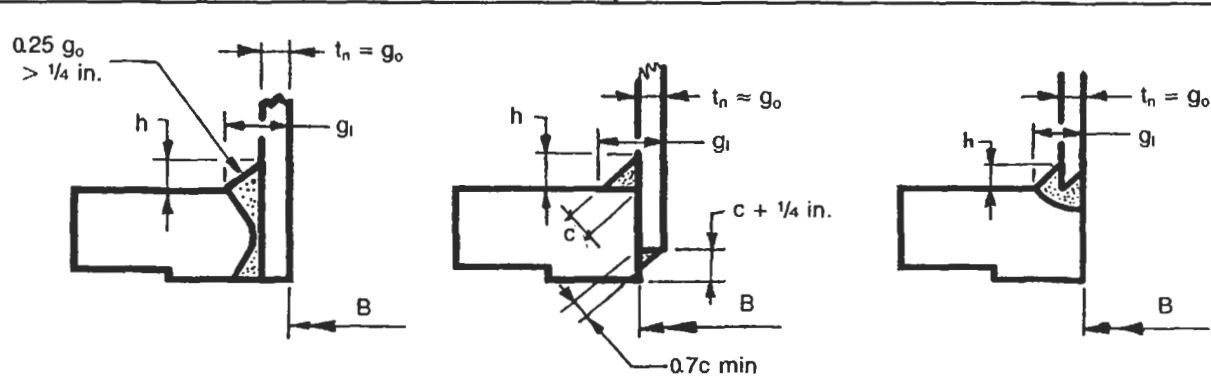

Figure 2-13. Various attachments of ring flanges. (All other dimensions and loadings per Figure 2-11.)

8 NOTES

If $g_o < 1.5t_n$ and $h < g_o$, design as integral. If $g_o > 1.5t_n$ and $h > g_o$, design as loose.
If $g_o \le 5/8$ in., $B/g_o \le 300$, $P \le 300$ psi and design temp. < 700°, design as integral or loose.
c = lesser of t_n or { loose: $2t_m$; integral: $2g_o$ } but not less than 1/4 in.

Adapted from Taylor Forge International, Inc., by permission.

TYPE 4: REVERSE FLANGE DESIGN

1	DESIGN CONDITIONS					
Design pressure, P		Allowable Stresses				
Design temperature		Flange			Bolting	
Flange material		Design temp., S_{fo}			Design temp., S_b	
Bolting material		Atm. temp., S_{fa}			Atm. temp., S_a	
Corrosion allowance						

2	GASKET AND FACING DETAILS		
Gasket		Facing	

3 TABLES 2-3 AND 2-4		4 LOAD AND BOLT CALCULATIONS			
N		$W_{m2} = b\pi Gy$		A_m = greater of W_{m2}/S_a or W_{m1}/S_b	
b		$H_P = 2b\pi GmP$			
G		$H = G^2\pi P/4$		A_b	
y		$W_{m1} = H_P + H$		$W = 0.5(A_m + A_b)S_a$	
m					

5 MOMENT CALCULATIONS					
Load		x Lever Arm		= Moment	
Operating					
$H_D = \pi B^2P/4$		$h_D = 0.5(C + g_1 - 2g_o - B)$		$M_D = H_Dh_D$	
$H_G = W_{m1} - H$		$h_G = 0.5(C - G)$		$M_G = H_Gh_G$	
$H_T = H - H_D$		$h_T = 0.5(C - (B + G)/2)$		$M_T = H_Th_T$	
Add moments algebraically, then use the absolute value $\lvert M_o \rvert$ in all subsequent calculations.				$\lvert M_o \rvert$	
Seating					
$H_G = W$		$h_G = 0.5(C - G)$		M_o'	

6 K AND HUB FACTORS			
$K = A/B'$		h/h_o	
T		F	
Z		V	
Y		f	
U		$e = F/h_o$	
g_1/g_o		$d = \frac{U_R}{V} h_og_o^2$	
$h_o = \sqrt{Ag_o}$			
$Y_R = \alpha_R Y$		$U_R = \alpha_R U$	
$\alpha_R = \frac{1}{K^2}\left[1 + \frac{3(K+1)(1-\nu)}{\pi Y}\right]$			
$T_R = \frac{(Z+\nu)}{(Z-\nu)}\alpha_R T$			

7 STRESS FORMULA FACTORS			
t		$\delta = t^3/d$	
$\alpha = te + 1$		$\lambda = \gamma + \delta$	
$\beta = 4/3\ te + 1$		$m_o = M_o/B'$	
$\gamma = \alpha/T_R$		$m_G = M_o'/B'$	

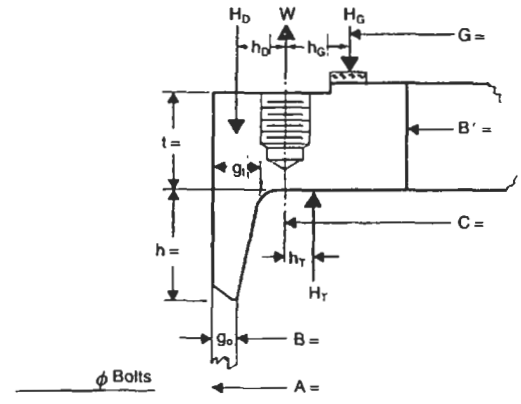

Figure 2-14. Dimensional data and forces for a reverse flange.

8 STRESS CALCULATIONS					
Allowable Stress	Operating		Allowable Stress	Seating	
1.5 S_{fo}	Longitudinal hub, $S_H = fm_o/\lambda g_1^2$		1.5 S_{fa}	Longitudinal hub, $S_H = fm_G/\lambda g_1^2$	
S_{fo}	Radial flange, $S_R = \beta m_o/\lambda t^2$		S_{fa}	Radial flange, $S_R = \beta m_G/\lambda t^2$	
S_{fo}	Tangential flange, $S_T = m_oY_R/t^2 - ZS_R$ $(0.67te + 1)/\beta$		S_{fa}	Tangential flange, $S_T = m_GY_R/t^2 - ZS_R$ $(0.67te + 1)/\beta$	
S_{fo}	Greater of $0.5(S_H + S_R)$ or $0.5(S_H + S_T)$		S_{fa}	Greater of $0.5(S_H + S_R)$ or $0.5(S_H + S_T)$	
S_{fo}	Tangential flange $S_T(A_TB') = \frac{m_o}{t^2}\left[Y - \frac{2k^2\left(1 + \frac{2}{3}te\right)}{(k^2-1)\lambda}\right]$		S_{fa}	Tangential flange $S_T(A_TB') = \frac{m_G}{t^2}\left[Y - \frac{2k^2\left(1 + \frac{2}{3}te\right)}{(k^2-1)\lambda}\right]$	

Adapted from Taylor Forge International, Inc., by permission.

TYPE 5: SLIP-ON FLANGE, FLAT FACE, FULL GASKET

1 DESIGN CONDITIONS

Design pressure, P		Allowable Stresses			
Design temperature		Flange		Bolting	
Flange material		Design temp., S_{fo}		Design temp., S_b	
Bolting material		Atm. temp., S_{fa}		Atm. temp., S_a	
Corrosion allowance					

2 GASKET AND FACING DETAILS

Gasket		Facing	

3 TABLES 2-3 AND 2-4

$G = C - 2h_G$	
$b = (C - B)/4$	
y	
m	

4 LOAD AND BOLT CALCULATIONS

$W_{m2} = b\pi Gy + H'_{GY}$		A_m = greater of W_{m2}/S_a or W_{m1}/S_b	
$H_P = 2b\pi GmP$		A_b	
$H'_p = (h_G/h'_G)H_P$		$W = 0.5(A_m + A_b)S_a$	
$H = G^2\pi P/4$		$H'_{GY} = (h_G/h'_G)b\pi Gy$	
$W_{m1} = H + H_P + H'_p$			

5 MOMENT CALCULATIONS

Load	×	Lever Arm	=	Moment

Operating

$H_D = \pi B^2P/4$		$h_D = R + g_1$		$M_D = H_Dh_D$	
$H_T = H - H_D$		$h_T = 0.5(R + g_1 + h_G)$		$M_T = H_Th_T$	
				M_o	

Lever Arms

$h_G = \frac{(C - B)(2B + C)}{6(B + C)}$		$h'_G = \frac{(A - C)(2A + C)}{6(C + A)}$	

Reverse Moment

$H_G = W - H$		$h''_G = \frac{h_Gh'_G}{h_G + h'_G}$		$M_G = H_Gh''_G$	

6 K AND HUB FACTORS

$K = A/B$		h/h_o	
T		F_L	
Z		V_L	
Y		$e = \frac{F_L}{h_o}$	
U			
g_1/g_o		$d = \frac{U}{V_L}h_og_o^2$	
$h_o = \sqrt{Bg_o}$			

7 STRESS FORMULA FACTORS

t		$\delta = t^3/d$	
$\alpha = te + 1$		$\lambda = \gamma + \delta$	
$\beta = 4/3\ te + 1$		$m_o = M_o/B$	
$\gamma = \alpha/T$			

If bolt spacing exceeds 2a + t, multiply m_o in above equation by: $\sqrt{\frac{\text{Bolt spacing}}{2a + t}}$

8 STRESS CALCULATIONS

Allowable Stress	Operating	
1.5 S_{fo}	Longitudinal hub, $S_H = m_o/\lambda g_1^2$	
S_{fo}	Radial flange, $S_R = \beta m_o/\lambda t^2$	
S_{fo}	Tangential flange, $S_T = m_oY/t^2 - ZS_R$	
S_{fo}	Greater of $0.5(S_H + S_R)$ or $0.5(S_H + S_T)$	
S_{fo}	Radial stress at bolt circle $S_{RAD} = \frac{6M_G}{t^2(\pi C - nd_1)}$	

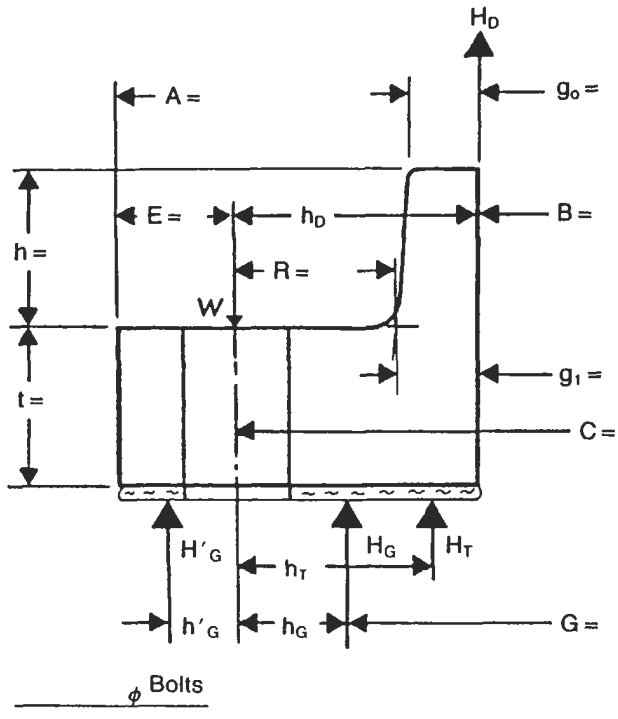

Figure 2-15. Dimensional data and forces for a slip-on flange, flat face, full gasket.

Adapted from Taylor Forge International, Inc., by permission.

Table 2-3

Gasket Materials and Contact Facings[1]

Gasket Factors (m) for Operating Conditions and Minimum Design Seating Stress (y)

Gasket Material		Gasket Factor m	Min. Design Seating Stress y	Sketches and Notes	Use Facing Sketch	Use Column
					Refer to Table 2-4	
Self-energizing types: O rings, metallic, elastomer or other gasket types considered as self-sealing		0	0			
Elastomers without fabric or a high percentage of asbestos fiber:					(1a), (1b), (1e), (1d), (4), (5)	II
Below 75A Shore Durometer		0.50	0			
75A or higher Shore Durometer		1.00	200			
Asbestos with a suitable binder for the operating conditions	1/8 thick	2.00	1,600			
	1/16 thick	2.75	3,700			
	1/32 thick	3.50	6,500			
Elastomers with cotton fabric insertion		1.25	400			
Elastomers with asbestos fabric insertion, with or without wire reinforcement	3-ply	2.25	2,200			
	2-ply	2.50	2,900			
	1-ply	2.75	3,700			
Vegetable fiber		1.75	1,100			
Spiral-wound metal, asbestos filled	Carbon	2.50	10,000			
	Stainless or Monel	3.00	10,000			
Corrugated metal, asbestos inserted or corrugated metal, jacketed asbestos filled	Soft aluminum	2.50	2,900			
	Soft copper or brass	2.75	3,700			
	Iron or soft steel	3.00	4,500			
	Monel or 4%–6% chrome	3.25	5,500			
	Stainless steels	3.50	6,500			
Corrugated metal	Soft aluminum	2.75	3,700		(1a), (1b), (1c), (1d)	
	Soft copper or brass	3.00	4,500			
	Iron or soft steel	3.25	5,500			
	Monel or 4%–6% chrome	3.50	6,500			
	Stainless steels	3.75	7,600			
Flat metal jacketed asbestos filled	Soft aluminum	3.25	5,500		(1a), (1b), (1c), (1d), (2)[2]	
	Soft copper or brass	3.50	6,500			
	Iron or soft steel	3.75	7,600			
	Monel or 4%–6% chrome	3.50	8,000			
		3.75	9,000			
	Stainless steels	3.75	9,000			
Grooved metal	Soft aluminum	3.25	5,500		(1a), (1b), (1c), (1d), (2), (3)	
	Soft copper or brass	3.50	6,500			
	Iron or soft steel	3.75	7,600			
	Monel or 4%–6% chrome	3.75	9,000			
	Stainless steels	4.25	10,100			
Solid flat metal	Soft aluminum	4.00	8,800		(1a), (1b), (1c), (1d), (2), (3), (4), (5)	I
	Soft copper or brass	4.75	13,000			
	Iron or soft steel	5.50	18,000			
	Monel or 4%–6% chrome	6.00	21,800			
	Stainless steels	6.50	26,000			
Ring joint	Iron or soft steel	5.50	18,000		(6)	
	Monel or 4%–6% chrome	6.00	21,800			
	Stainless steels	6.50	26,000			

NOTES:

1. This table gives a list of many commonly used gasket materials and contact facings with suggested design values of m and y that have generally proved satisfactory in actual service when using effective gasket seating width b given in Table 2-4. The design values and other details given in this table are suggested only and are not mandatory.
2. The surface of a gasket having a lap should not be against the nubbin.

Reprinted by permission from ASME Code Section VIII Div. 1, Table 2-5.1.

Table 2-4
Effective Gasket Width

Facing Sketch (Exaggerated)	Basic Gasket Seating Width, b_o	
	Column I	Column II
(1a) 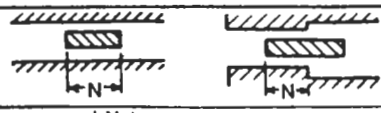	$\frac{N}{2}$	$\frac{N}{2}$
(1b)[1] 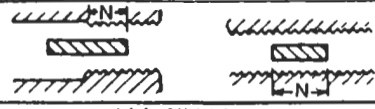		
(1c) 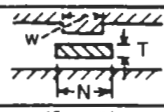 $w \leqq N$	$\frac{w+T}{2}$; $\left(\frac{w+N}{4}\text{ max}\right)$	$\frac{w-T}{2}$; $\left(\frac{w-N}{4}\text{ max}\right)$
(1d) 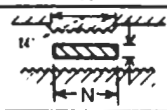 $w \leqq N$		
(2) 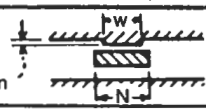 1/64 in. Nubbin $w \leqq \frac{N}{2}$	$\frac{w+N}{4}$	$\frac{w+3N}{8}$
(3) 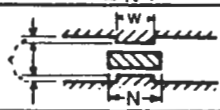 1/64 in. Nubbin $w \leqq \frac{N}{2}$	$\frac{N}{4}$	$\frac{3N}{8}$
(4)* 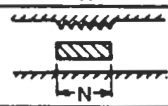	$\frac{3N}{8}$	$\frac{7N}{16}$
(5)* 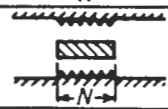	$\frac{N}{4}$	$\frac{3N}{8}$
(6) 	$\frac{w}{8}$	
Effective Gasket Seating Width, b		
$b = b_o$, when $b_o \leqq 1/4$ in. $b = \frac{\sqrt{b_o}}{2}$, when $b_o > 1/4$ in.		
Location of Gasket Load Reaction		
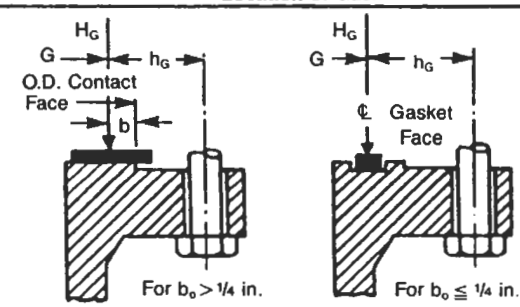	*Note:* The gasket factors listed only apply to flanged joints in which the gasket is contained entirely within the inner edges of the bolt holes	

* Where serrations do not exceed 1/64-in. depth and 1/32-in. width spacing, sketches (1b) and (1d) shall be used.

Reprinted by permission from ASME Code Section VIII Div. 1, Table 2-5.2.

Table 2-5
Table of Coefficients

K	T	Z	Y	U	K	T	Z	Y	U	K	T	Z	Y	U	K	T	Z	Y	U
1.001	1.91	1000.50	1911.16	2100.18	1.046	1.90	22.05	42.75	46.99	1.091	1.88	11.52	22.22	24.41	1.136	1.86	7.88	15.26	16.77
1.002	1.91	500.50	956.16	1050.72	1.047	1.90	21.79	41.87	46.03	1.092	1.88	11.40	21.99	24.16	1.137	1.86	7.83	15.15	16.65
1.003	1.91	333.83	637.85	700.93	1.048	1.90	21.35	41.02	45.09	1.093	1.88	11.28	21.76	23.91	1.138	1.86	7.78	15.05	16.54
1.004	1.91	250.50	478.71	526.05	1.049	1.90	20.92	40.21	44.21	1.094	1.88	11.16	21.54	23.67	1.139	1.86	7.73	14.95	16.43
1.005	1.91	200.50	383.22	421.12	1.050	1.89	20.51	39.43	43.34	1.095	1.88	11.05	21.32	23.44	1.140	1.86	7.68	14.86	16.35
1.006	1.91	167.17	319.56	351.16	1.051	1.89	20.12	38.68	42.51	1.096	1.88	10.94	21.11	23.20	1.141	1.86	7.62	14.76	16.22
1.007	1.91	143.36	274.09	301.20	1.052	1.89	19.74	37.96	41.73	1.097	1.88	10.83	20.91	22.97	1.142	1.86	7.57	14.66	16.11
1.008	1.91	125.50	239.95	263.75	1.053	1.89	19.38	37.27	40.96	1.098	1.88	10.73	20.71	22.75	1.143	1.86	7.53	14.57	16.01
1.009	1.91	111.61	213.40	234.42	1.054	1.89	19.03	36.60	40.23	1.099	1.88	10.62	20.51	22.39	1.144	1.86	7.48	14.48	15.91
1.010	1.91	100.50	192.19	211.19	1.055	1.89	18.69	35.96	39.64	1.100	1.88	10.52	20.31	22.18	1.145	1.86	7.43	14.39	15.83
1.011	1.91	91.41	174.83	192.13	1.056	1.89	18.38	35.34	38.84	1.101	1.88	10.43	20.15	22.12	1.146	1.86	7.38	14.29	15.71
1.012	1.91	83.84	160.38	176.25	1.057	1.89	18.06	34.74	38.19	1.102	1.88	10.33	19.94	21.92	1.147	1.86	7.34	14.20	15.61
1.013	1.91	77.43	148.06	162.81	1.058	1.89	17.76	34.17	37.56	1.103	1.88	10.23	19.76	21.72	1.148	1.86	7.29	14.12	15.51
1.014	1.91	71.93	137.69	151.30	1.059	1.89	17.47	33.62	36.95	1.104	1.88	10.14	19.58	21.52	1.149	1.86	7.25	14.03	15.42
1.015	1.91	67.17	128.61	141.33	1.060	1.89	17.18	33.04	36.34	1.105	1.88	10.05	19.38	21.30	1.150	1.86	7.20	13.95	15.34
1.016	1.90	63.00	120.56	132.49	1.061	1.89	16.91	32.55	35.78	1.106	1.88	9.96	19.33	21.14	1.151	1.86	7.16	13.86	15.23
1.017	1.90	59.33	111.98	124.81	1.062	1.89	16.64	32.04	35.21	1.107	1.87	9.87	19.07	20.96	1.152	1.86	7.11	13.77	15.14
1.018	1.90	56.06	107.36	118.00	1.063	1.89	16.40	31.55	34.68	1.108	1.87	9.78	18.90	20.77	1.153	1.86	7.07	13.69	15.05
1.019	1.90	53.14	101.72	111.78	1.064	1.89	16.15	31.08	34.17	1.109	1.87	9.70	18.74	20.59	1.154	1.86	7.03	13.61	14.96
1.020	1.90	50.51	96.73	106.30	1.065	1.89	15.90	30.61	33.65	1.110	1.87	9.62	18.55	20.38	1.155	1.86	6.99	13.54	14.87
1.021	1.90	48.12	92.21	101.33	1.066	1.89	15.67	30.17	33.17	1.111	1.87	9.54	18.42	20.25	1.156	1.86	6.95	13.45	14.78
1.022	1.90	45.96	88.04	96.75	1.067	1.89	15.45	29.74	32.69	1.112	1.87	9.46	18.27	20.08	1.157	1.86	6.91	13.37	14.70
1.023	1.90	43.98	84.30	92.64	1.068	1.89	15.22	29.32	32.22	1.113	1.87	9.38	18.13	19.91	1.158	1.86	6.87	13.30	14.61
1.024	1.90	42.17	80.81	88.81	1.069	1.89	15.02	28.91	31.79	1.114	1.87	9.30	17.97	19.75	1.159	1.86	6.83	13.22	14.53
1.025	1.90	40.51	77.61	85.29	1.070	1.89	14.80	28.51	31.34	1.115	1.87	9.22	17.81	19.55	1.160	1.86	6.79	13.15	14.45
1.026	1.90	38.97	74.70	82.09	1.071	1.89	14.61	28.13	30.92	1.116	1.87	9.15	17.68	19.43	1.161	1.85	6.75	13.07	14.36
1.027	1.90	37.54	71.97	79.08	1.072	1.89	14.41	27.76	30.51	1.117	1.87	9.07	17.54	19.27	1.162	1.85	6.71	13.00	14.28
1.028	1.90	36.22	69.43	76.30	1.073	1.89	14.22	27.39	30.11	1.118	1.87	9.00	17.40	19.12	1.163	1.85	6.67	12.92	14.20
1.029	1.90	34.99	67.11	73.75	1.074	1.88	14.04	27.04	29.72	1.119	1.87	8.94	17.27	18.98	1.164	1.85	6.64	12.85	14.12
1.030	1.90	33.84	64.91	71.33	1.075	1.88	13.85	26.69	29.34	1.120	1.87	8.86	17.13	18.80	1.165	1.85	6.60	12.78	14.04
1.031	1.90	32.76	62.85	69.06	1.076	1.88	13.68	26.36	28.98	1.121	1.87	8.79	17.00	18.68	1.166	1.85	6.56	12.71	13.97
1.032	1.90	31.76	60.92	66.94	1.077	1.88	13.56	26.03	28.69	1.122	1.87	8.72	16.87	18.54	1.167	1.85	6.53	12.64	13.89
1.033	1.90	30.81	59.11	64.95	1.078	1.88	13.35	25.72	28.27	1.123	1.87	8.66	16.74	18.40	1.168	1.85	6.49	12.58	13.82
1.034	1.90	29.92	57.41	63.08	1.079	1.88	13.18	25.40	27.92	1.124	1.87	8.59	16.62	18.26	1.169	1.85	6.46	12.51	13.74
1.035	1.90	29.08	55.80	61.32	1.080	1.88	13.02	25.10	27.59	1.125	1.87	8.53	16.49	18.11	1.170	1.85	6.42	12.43	13.66
1.036	1.90	28.29	54.29	59.66	1.081	1.88	12.87	24.81	27.27	1.126	1.87	8.47	16.37	17.99	1.171	1.85	6.39	12.38	13.60
1.037	1.90	27.54	52.85	58.08	1.082	1.88	12.72	24.52	26.95	1.127	1.87	8.40	16.25	17.86	1.172	1.85	6.35	12.31	13.53
1.038	1.90	26.83	51.50	56.59	1.083	1.88	12.57	24.24	26.65	1.128	1.87	8.34	16.14	17.73	1.173	1.85	6.32	12.25	13.46
1.039	1.90	26.15	50.21	55.17	1.084	1.88	12.43	24.00	26.34	1.129	1.87	8.28	16.02	17.60	1.174	1.85	6.29	12.18	13.39
1.040	1.90	25.51	48.97	53.82	1.085	1.88	12.29	23.69	26.05	1.130	1.87	8.22	15.91	17.48	1.175	1.85	6.25	12.10	13.30
1.041	1.90	24.90	47.81	53.10	1.086	1.88	12.15	23.44	25.77	1.131	1.87	8.16	15.79	17.35	1.176	1.85	6.22	12.06	13.25
1.042	1.90	24.32	46.71	51.33	1.087	1.88	12.02	23.18	25.48	1.132	1.87	8.11	15.68	17.24	1.177	1.85	6.19	12.00	13.18
1.043	1.90	23.77	45.64	50.15	1.088	1.88	11.89	22.93	25.20	1.133	1.86	8.05	15.57	17.11	1.178	1.85	6.16	11.93	13.11
1.044	1.90	23.23	44.64	49.05	1.089	1.88	11.76	22.68	24.93	1.134	1.86	7.99	15.46	16.99	1.179	1.85	6.13	11.87	13.05
1.045	1.90	22.74	43.69	48.02	1.090	1.88	11.63	22.44	24.66	1.135	1.86	7.94	15.36	16.90	1.180	1.85	6.10	11.79	12.96

Table 2-5
Table of Coefficients (Continued)

K	T	Z	Y	U	K	T	Z	Y	U	K	T	Z	Y	U	K	T	Z	Y	U
1.182	1.85	6.04	11.70	12.86	1.278	1.81	4.16	8.05	8.85	1.434	1.74	2.89	5.56	6.10	1.75	1.60	1.97	3.64	4.00
1.184	1.85	5.98	11.58	12.73	1.281	1.81	4.12	7.98	8.77	1.438	1.74	2.87	5.52	6.05	1.76	1.60	1.95	3.61	3.96
1.186	1.85	5.92	11.47	12.61	1.284	1.80	4.08	7.91	8.69	1.442	1.74	2.85	5.48	6.01	1.77	1.60	1.94	3.57	3.93
1.188	1.85	5.86	11.36	12.49	1.287	1.80	4.05	7.84	8.61	1.446	1.74	2.83	5.44	5.97	1.78	1.59	1.92	3.54	3.89
1.190	1.84	5.81	11.26	12.37	1.290	1.80	4.01	7.77	8.53	1.450	1.73	2.81	5.40	5.93	1.79	1.59	1.91	3.51	3.85
1.192	1.84	5.75	11.15	12.25	1.293	1.80	3.98	7.70	8.46	1.454	1.73	2.80	5.36	5.89	1.80	1.58	1.89	3.47	3.82
1.194	1.84	5.70	11.05	12.14	1.296	1.80	3.94	7.63	8.39	1.458	1.73	2.78	5.32	5.85	1.81	1.58	1.88	3.44	3.78
1.196	1.84	5.65	10.95	12.03	1.299	1.80	3.91	7.57	8.31	1.462	1.73	2.76	5.28	5.80	1.82	1.58	1.86	3.41	3.75
1.198	1.84	5.60	10.85	11.92	1.302	1.80	3.88	7.50	8.24	1.466	1.73	2.74	5.24	5.76	1.83	1.57	1.85	3.38	3.72
1.200	1.84	5.55	10.75	11.81	1.305	1.80	3.84	7.44	8.18	1.470	1.72	2.72	5.20	5.71	1.84	1.57	1.84	3.35	3.69
1.202	1.84	5.50	10.65	11.71	1.308	1.79	3.81	7.38	8.11	1.475	1.72	2.70	5.16	5.66	1.85	1.56	1.83	3.33	3.65
1.204	1.84	5.45	10.56	11.61	1.311	1.79	3.78	7.32	8.05	1.480	1.72	2.68	5.12	5.61	1.86	1.56	1.81	3.30	3.62
1.206	1.84	5.40	10.47	11.51	1.314	1.79	3.75	7.26	7.98	1.485	1.72	2.66	5.08	5.57	1.87	1.56	1.80	3.27	3.59
1.208	1.84	5.35	10.38	11.41	1.317	1.79	3.72	7.20	7.92	1.490	1.72	2.64	5.04	5.53	1.88	1.55	1.79	3.24	3.56
1.210	1.84	5.31	10.30	11.32	1.320	1.79	3.69	7.14	7.85	1.495	1.71	2.62	5.00	5.49	1.89	1.55	1.78	3.22	3.54
1.212	1.83	5.27	10.21	11.22	1.323	1.79	3.67	7.09	7.79	1.500	1.71	2.60	4.96	5.45	1.90	1.54	1.77	3.19	3.51
1.214	1.83	5.22	10.12	11.12	1.326	1.79	3.64	7.03	7.73	1.505	1.71	2.58	4.92	5.41	1.91	1.54	1.75	3.17	3.48
1.216	1.83	5.18	10.04	11.03	1.329	1.78	3.61	6.98	7.67	1.510	1.71	2.56	4.88	5.37	1.92	1.54	1.74	3.14	3.45
1.218	1.83	5.14	9.96	10.94	1.332	1.78	3.58	6.92	7.61	1.515	1.71	2.54	4.84	5.33	1.93	1.53	1.73	3.12	3.43
1.220	1.83	5.10	9.89	10.87	1.335	1.78	3.56	6.87	7.55	1.520	1.70	2.53	4.80	5.29	1.94	1.53	1.72	3.09	3.40
1.222	1.83	5.05	9.80	10.77	1.338	1.78	3.53	6.82	7.50	1.525	1.70	2.51	4.77	5.25	1.95	1.53	1.71	3.07	3.38
1.224	1.83	5.01	9.72	10.68	1.341	1.78	3.51	6.77	7.44	1.530	1.70	2.49	4.74	5.21	1.96	1.52	1.70	3.05	3.35
1.226	1.83	4.98	9.65	10.60	1.344	1.78	3.48	6.72	7.39	1.535	1.70	2.47	4.70	5.17	1.97	1.52	1.69	3.03	3.33
1.228	1.83	4.94	9.57	10.52	1.347	1.78	3.46	6.68	7.33	1.540	1.69	2.46	4.66	5.13	1.98	1.51	1.68	3.01	3.30
1.230	1.83	4.90	9.50	10.44	1.350	1.78	3.43	6.63	7.28	1.545	1.69	2.44	4.63	5.09	1.99	1.51	1.68	2.98	3.28
1.232	1.83	4.86	9.43	10.36	1.354	1.77	3.40	6.57	7.21	1.55	1.69	2.43	4.60	5.05	2.00	1.51	1.67	2.96	3.26
1.234	1.83	4.83	9.36	10.28	1.358	1.77	3.37	6.50	7.14	1.56	1.69	2.40	4.54	4.99	2.01	1.50	1.66	2.94	3.23
1.236	1.82	4.79	9.29	10.20	1.362	1.77	3.34	6.44	7.08	1.57	1.68	2.37	4.48	4.92	2.02	1.50	1.65	2.92	3.21
1.238	1.82	4.76	9.22	10.13	1.366	1.77	3.31	6.38	7.01	1.58	1.68	2.34	4.42	4.86	2.04	1.49	1.63	2.88	3.17
1.240	1.82	4.72	9.15	10.05	1.370	1.77	3.28	6.32	6.95	1.59	1.67	2.31	4.36	4.79	2.06	1.48	1.62	2.85	3.13
1.242	1.82	4.69	9.08	9.98	1.374	1.77	3.25	6.27	6.89	1.60	1.67	2.28	4.31	4.73	2.08	1.48	1.60	2.81	3.09
1.244	1.82	4.65	9.02	9.91	1.378	1.76	3.22	6.21	6.82	1.61	1.66	2.26	4.25	4.67	2.10	1.47	1.59	2.78	3.05
1.246	1.82	4.62	8.95	9.84	1.382	1.76	3.20	6.16	6.77	1.62	1.65	2.23	4.20	4.61	2.12	1.46	1.57	2.74	3.01
1.248	1.82	4.59	8.89	9.77	1.386	1.76	3.17	6.11	6.72	1.63	1.65	2.21	4.15	4.56	2.14	1.46	1.56	2.71	2.97
1.250	1.82	4.56	8.83	9.70	1.390	1.76	3.15	6.06	6.66	1.64	1.65	2.18	4.10	4.50	2.16	1.45	1.55	2.67	2.94
1.252	1.82	4.52	8.77	9.64	1.394	1.76	3.12	6.01	6.60	1.65	1.65	2.16	4.05	4.45	2.18	1.44	1.53	2.64	2.90
1.254	1.82	4.49	8.71	9.57	1.398	1.75	3.10	5.96	6.55	1.66	1.64	2.14	4.01	4.40	2.20	1.44	1.52	2.61	2.87
1.256	1.82	4.46	8.65	9.51	1.402	1.75	3.07	5.92	6.49	1.67	1.64	2.12	3.96	4.35	2.22	1.43	1.51	2.58	2.84
1.258	1.81	4.43	8.59	9.44	1.406	1.75	3.05	5.87	6.44	1.68	1.63	2.10	3.92	4.30	2.24	1.42	1.50	2.56	2.81
1.260	1.81	4.40	8.53	9.38	1.410	1.75	3.02	5.82	6.39	1.69	1.63	2.08	3.87	4.26	2.26	1.41	1.49	2.53	2.78
1.263	1.81	4.36	8.45	9.28	1.414	1.75	3.00	5.77	6.34	1.70	1.63	2.06	3.83	4.21	2.28	1.41	1.48	2.50	2.75
1.266	1.81	4.32	8.37	9.19	1.418	1.75	2.98	5.72	6.29	1.71	1.62	2.04	3.79	4.17	2.30	1.40	1.47	2.48	2.72
1.269	1.81	4.28	8.29	9.11	1.422	1.75	2.96	5.68	6.25	1.72	1.62	2.02	3.75	4.12	2.32	1.40	1.46	2.45	2.69
1.272	1.81	4.24	8.21	9.02	1.426	1.74	2.94	5.64	6.20	1.73	1.61	2.00	3.72	4.08	2.34	1.39	1.45	2.43	2.67
1.275	1.81	4.20	8.13	8.93	1.430	1.74	2.91	5.60	6.15	1.74	1.61	1.99	3.68	4.04	2.36	1.38	1.44	2.40	2.64

2.38	1.38	1.43	2.38	2.61	2.83	1.25	1.28	1.98	2.17	3.46	1.11	1.18	1.64	1.80	4.15	0.989	1.12	1.40	1.54
2.40	1.37	1.42	2.36	2.59	2.86	1.24	1.28	1.96	2.15	3.50	1.10	1.18	1.62	1.78	4.20	0.982	1.12	1.39	1.53
2.42	1.36	1.41	2.33	2.56	2.89	1.23	1.27	1.94	2.13	3.54	1.09	1.17	1.61	1.76	4.25	0.975	1.12	1.38	1.51
2.44	1.36	1.40	2.31	2.54	2.92	1.22	1.27	1.92	2.11	3.58	1.08	1.17	1.59	1.75	4.30	0.968	1.11	1.36	1.50
2.46	1.35	1.40	2.29	2.52						3.62	1.07	1.16	1.57	1.73					
					2.95	1.22	1.26	1.90	2.09						4.35	0.962	1.11	1.35	1.48
2.48	1.35	1.39	2.27	2.50	2.98	1.21	1.25	1.88	2.07	3.66	1.07	1.16	1.56	1.71	4.40	0.955	1.11	1.34	1.47
2.50	1.34	1.38	2.25	2.47	3.02	1.20	1.25	1.86	2.04	3.70	1.06	1.16	1.55	1.70	4.45	0.948	1.11	1.33	1.46
2.53	1.33	1.37	2.22	2.44	3.06	1.19	1.24	1.83	2.01	3.74	1.05	1.15	1.53	1.68	4.50	0.941	1.10	1.31	1.44
2.56	1.32	1.36	2.19	2.41						3.78	1.05	1.15	1.52	1.67	4.55	0.934	1.10	1.30	1.43
					3.10	1.18	1.23	1.81	1.99						4.60	0.928	1.10	1.29	1.42
2.59	1.31	1.35	2.17	2.38	3.14	1.17	1.23	1.79	1.97	3.82	1.04	1.15	1.50	1.65	4.65	0.921	1.10	1.28	1.41
2.62	1.30	1.34	2.14	2.35	3.18	1.16	1.22	1.77	1.94	3.86	1.03	1.14	1.49	1.64	4.70	0.914	1.09	1.27	1.39
2.65	1.30	1.33	2.12	2.32	3.22	1.16	1.21	1.75	1.92	3.90	1.03	1.14	1.48	1.62	4.75	0.908	1.09	1.26	1.38
2.68	1.29	1.32	2.09	2.30	3.26	1.15	1.21	1.73	1.90	3.94	1.02	1.14	1.46	1.61	4.80	0.900	1.09	1.25	1.37
2.71	1.28	1.31	2.07	2.27	3.30	1.14	1.20	1.71	1.88	3.98	1.01	1.13	1.45	1.60	4.85	0.893	1.09	1.24	1.36
2.74	1.27	1.31	2.04	2.25	3.34	1.13	1.20	1.69	1.86	4.00	1.009	1.13	1.45	1.59	4.90	0.887	1.09	1.23	1.35
2.77	1.26	1.30	2.02	2.22	3.38	1.12	1.19	1.67	1.84	4.05	1.002	1.13	1.43	1.57	4.95	0.880	1.08	1.22	1.34
2.80	1.26	1.29	2.00	2.20	3.42	1.11	1.19	1.66	1.82	4.10	0.996	1.13	1.42	1.56	5.00	0.873	1.08	1.21	1.33

Reprinted by permission of Taylor Forge International, Inc.

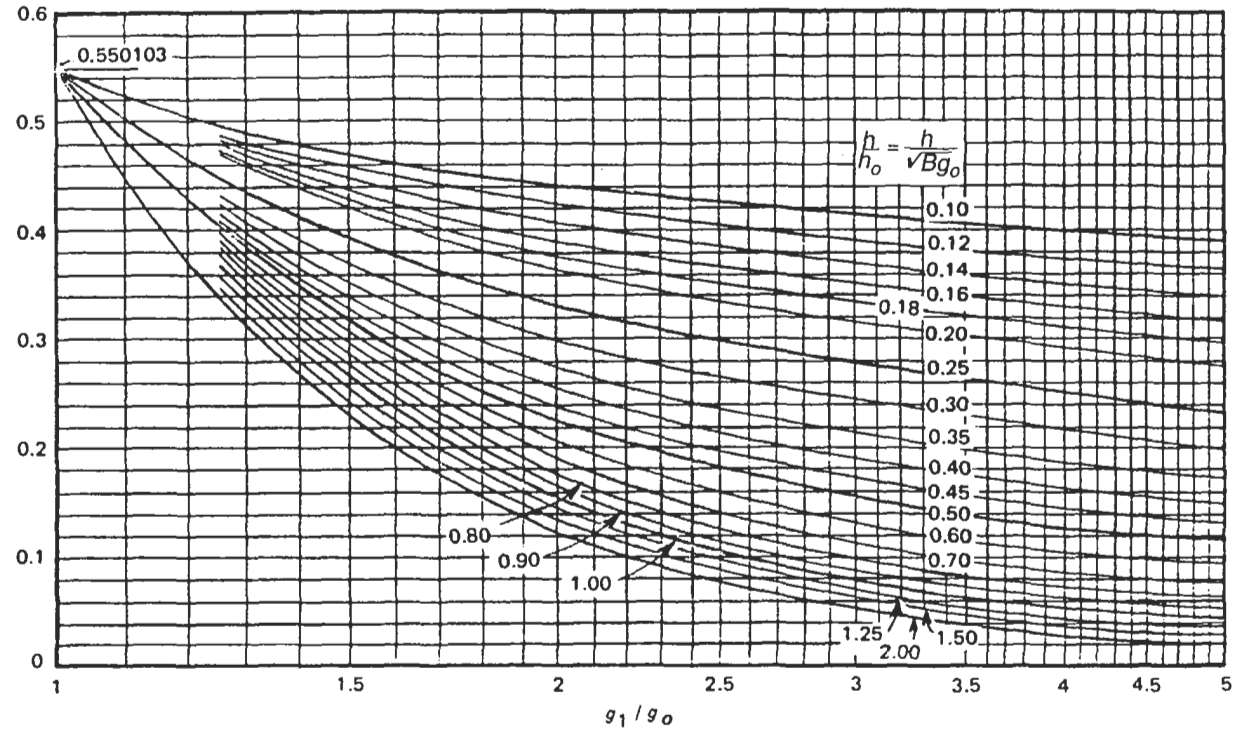

Figure 2-16. Values of V (integral flange factors). (Reprinted by permission from the ASME Code, Section VIII, Div. 1, Figure 2-7.3.)

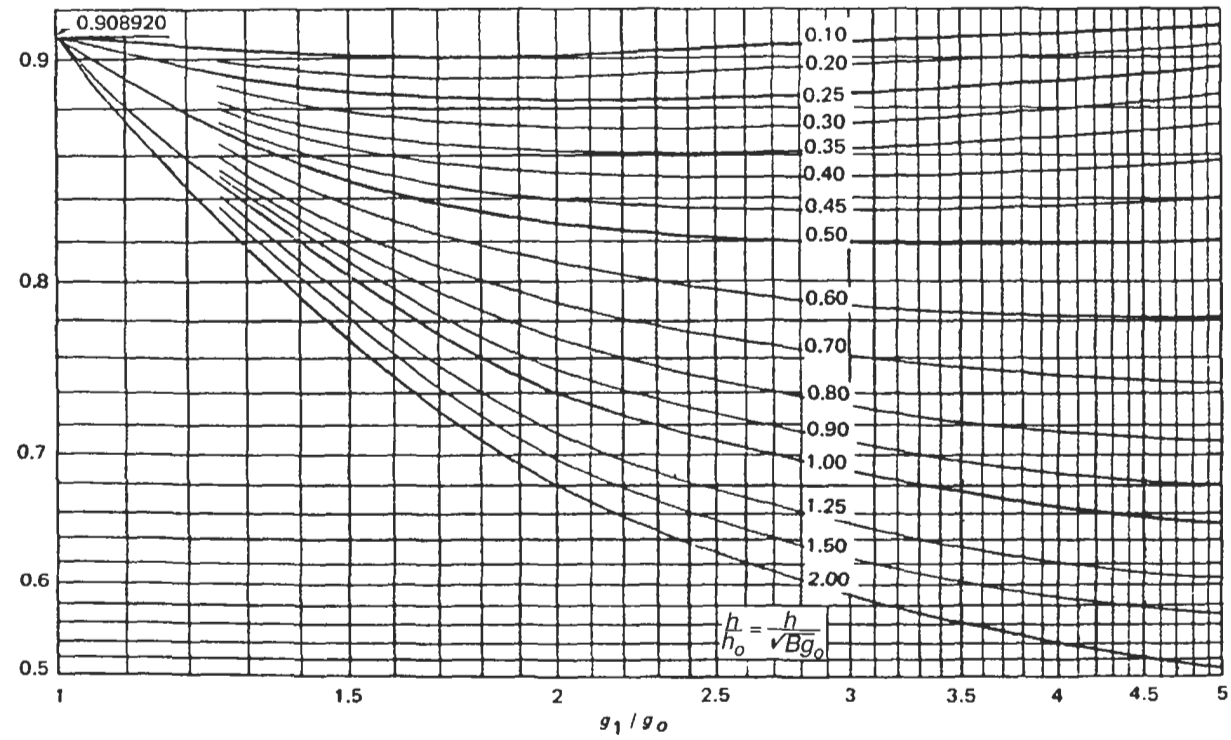

Figure 2-17. Values of F (integral flange factors). (Reprinted by permission from the ASME Code, Section VIII, Div. 1, Figure 2-7.2.)

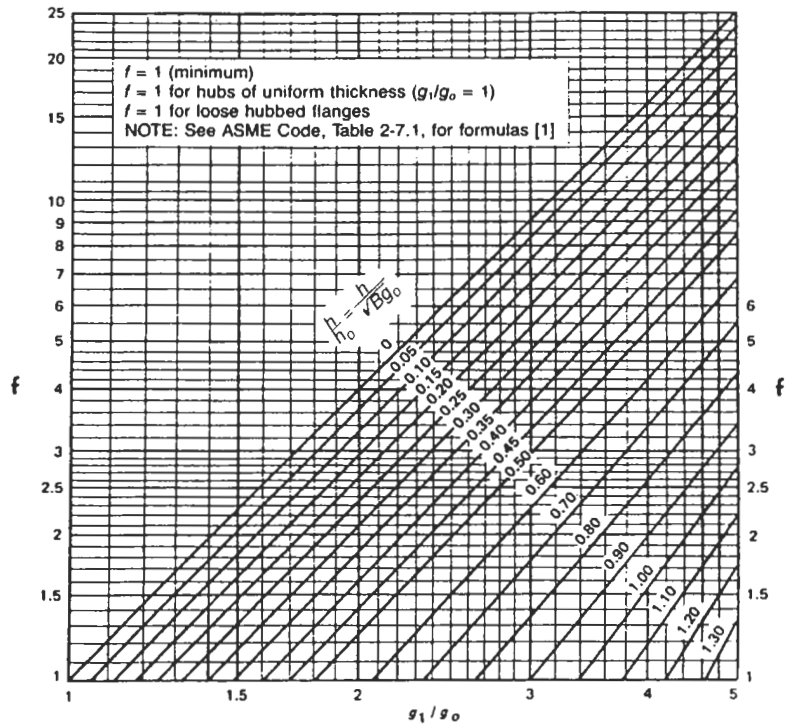

Figure 2-18. Values of f (hub stress correction factor). (Reprinted by permission from the ASME Code, Section VIII, Div. 1, Figure 2-7.6.)

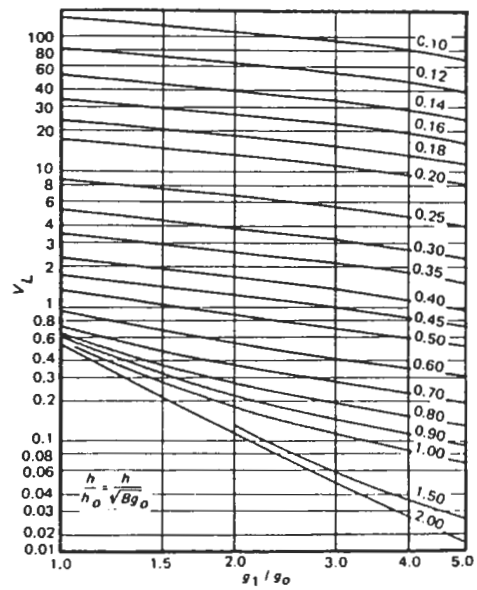

Figure 2-19. Values of V_L (loose hub flange factors). (Reprinted by permission from the ASME Code, Section VIII, Div. 1, Figure 2-7.5.)

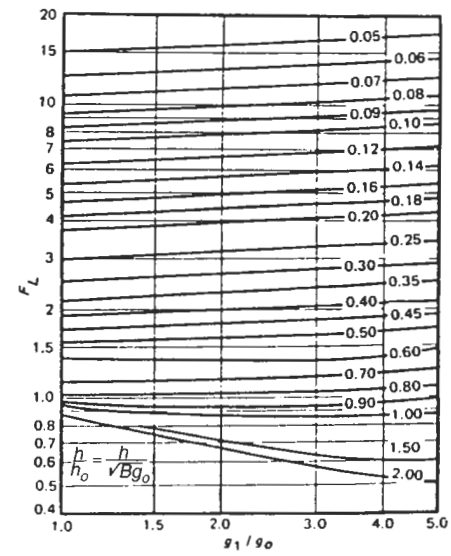

Figure 2-20. Values of F_L (loose hub flange factors). (Reprinted by permission from the ASME Code, Section VIII, Div. 1, Figure 2-7.4.)

Table 2-5a
Dimensional Data for Bolts and Flanges

Bolt Size	Standard Thread		8-Thread Series		Bolt Spacing		Minimum Radial Distance *R*	Edge Distance *E*	Nut Dimension (across flats)	Maximum Fillet Radius at base of hub
	No. of Threads	Root Area	No. of Threads	Root Area	Minimum B_S	Preferred				
1/2"	13	0.126	No. 8 thread		1 1/4"	3"	13/16	5/8 "	7/8 "	1/4"
5/8"	11	0.202	series below 1"		1 1/2	3	15/16	3/4	1 1/16	5/16
3/4"	10	0.302			1 3/4	3	1 1/8	13/16	1 1/4	3/8
7/8"	9	0.419			2 1/16	3	1 1/4	15/16	1 7/16	3/8
1"	8	0.551	8	0.551	2 1/4	3	1 3/8	1 1/16	1 5/8	7/16
1 1/8"	7	0.693	8	0.728	2 1/2	3	1 1/2	1 1/8	1 13/16	7/16
1 1/4"	7	0.890	8	0.929	2 13/16	3	1 3/4	1 1/4	2	9/16
1 3/8"	6	1.054	8	1.155	3 1/16		1 7/8	1 3/8	2 3/16	9/16
1 1/2"	6	1.294	8	1.405	3 1/4		2	1 1/2	2 3/8	5/8
1 5/8"	5 1/2	1.515	8	1.680	3 1/2		2 1/8	1 5/8	2 9/16	5/8
1 3/4"	5	1.744	8	1.980	3 3/4		2 1/4	1 3/4	2 3/4	5/8
1 7/8"	5	2.049	8	2.304	4		2 3/8	1 7/8	2 15/16	5/8
2"	4 1/2	2.300	8	2.652	4 1/4		2 1/2	2	3 1/8	11/16
2 1/4"	4 1/2	3.020	8	3.423	4 3/4		2 3/4	2 1/4	3 1/2	11/16
2 1/2"	4	3.715	8	4.292	5 1/4		3 1/16	2 3/8	3 7/8	13/16
2 3/4"	4	4.618	8	5.259	5 3/4		3 3/8	2 5/8	4 1/4	7/8
3"	4	5.621	8	6.234	6 1/4		3 5/8	2 7/8	4 5/8	15/16

Notes

1. The procedures as outlined herein have been taken entirely from Taylor Forge Bulletin No. 502, 7th Edition, entitled "Modern Flange Design." The forms and tables have been duplicated here for the user's convenience. The design forms are fast and accurate and are accepted throughout the industry. For additional information regarding flange design, please consult this excellent bulletin.
2. Whenever possible, utilize standard flanges. The ASME Code accepts the standard pressure-temperature ratings of ANSI B16.5. For larger diameter flanges use ANSI B16.47.
3. Flange calculations are done either as "integral" or "loose." A third classification, "optional," refers to flanges which do not fall into either of the foregoing categories and thus can be designed as either integral or loose. Definitions and examples of these categories are:
   - *Integral*—Hub and flange are one continuous structure either by manufacture or by full penetration welding. Some examples are:
     a. Welding neck flanges.
     b. Long weld neck flanges.
     c. Ring flanges attached with full penetration welds.

     Use design form "Type 1: Weld Neck Flange Design (Integral)," or "Type 3: Ring Flange Design."
   - *Loose*—Neither flange nor pipe has any attachment or is non-integral. It is assumed for purposes of analysis, that the hubs (if used) act independent of the pipe. Examples are:
     a. Slip-on flanges.
     b. Socket weld flanges.
     c. Lap joint flanges.
     d. Screwed flanges.
     e. Ring flanges attached without full penetration welds.

     Use design form "Type 2: Slip-On Flange Design (Loose)," or "Type 3: Ring Flange Design."
4. Hubs have no minimum limit for h and g_o, but values of $g_o < 1.5\,t_n$ and $h < g_o$ are not recommended. For slip-on flanges as a first trial, use $g_1 = 2$ times pipe wall thickness.
5. The values of T, Z, Y, and U in Table 2-5 have been computed based on Poisson's ratio of 0.3.
6. B is the I.D. of the flange and not the pipe I.D. For small-diameter flanges when B is less than $20\,g_1$, it is optional for the designer to substitute B_1 for B in Code formula for longitudinal hub stress, S_H. (See [1, Para. 2-3 of Section VIII, Div 1].)

7. In general, bolts should always be used in multiples of 4. For large-diameter flanges, use many smaller bolts on a tight bolt circle to reduce the flange thickness. Larger bolts require a large bolt circle, which greatly increases flange thickness.
8. If the bolt holes are slotted to allow for swing-away bolting, substitute the diameter of the circle tangent to the inner edges of the slots for dimension A and follow the appropriate design procedures.
9. Square and oval flanges with circular bores should be treated as "inscribed" circular flanges. Use a bolt circle passing through the center of the outermost bolt holes. The same applies for noncircular openings; however, the bolt spacing becomes more critical. The spacing factor can be less than required for circular flanges since the metal available in the corners tends to spread the bolt load and even out the moment.
10. Design flanges to withstand both pressure and external loads, use "equivalent" pressure P_e as follows:

$$P_e = \frac{16M}{\pi G^3} + \frac{4F}{\pi G^2} + P$$

where M = bending moment, in.-lb
F = radial load, lb

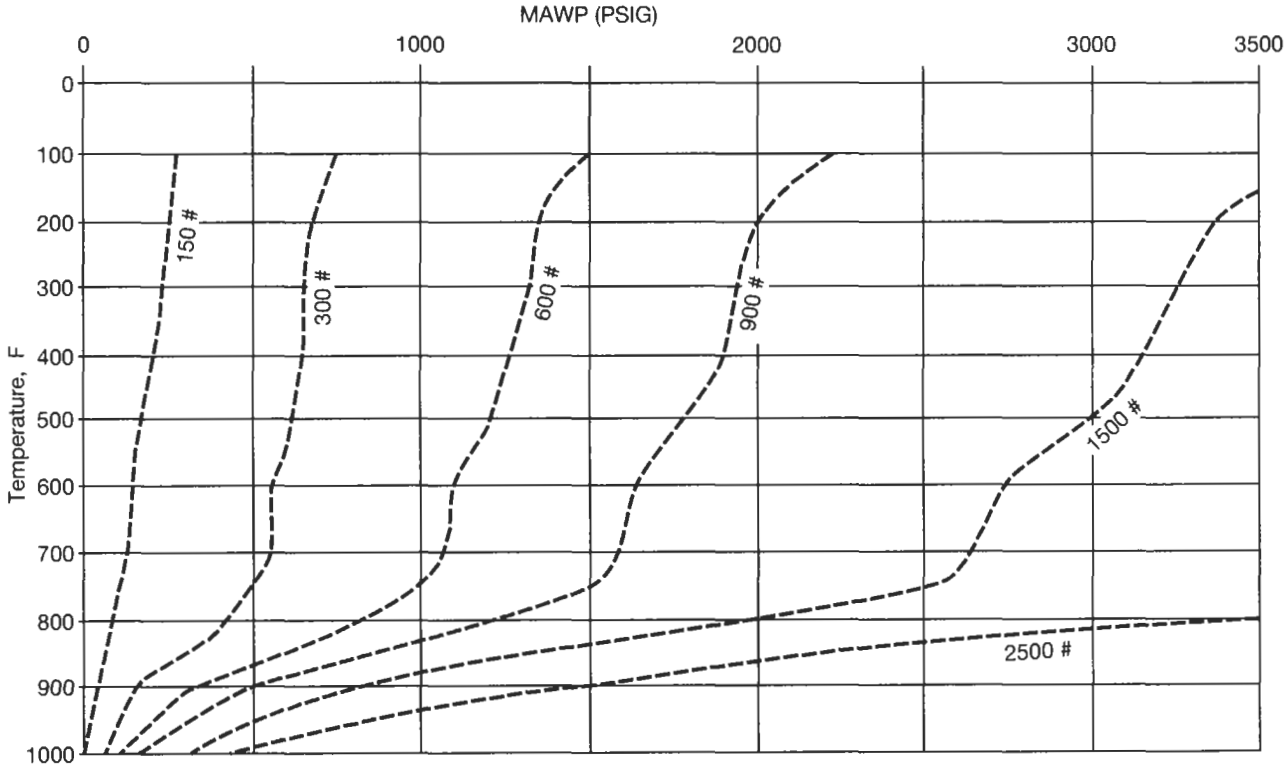

Notes: 1. For carbon steel flanges only. Material Group 1.1 A-105 or A-350-LF2 with flat ring gasket only.
2. Based on ANSI B16.5.

Figure 2-20a. Pressure-temperature ratings for standard flanges.

Table 2-5b
Number and Size of Bolts for Flanged Joints

Primary Service Pressure Rating	Bolting	Flange Facing	Nominal Pipe Size																			
			½	¾	1	1¼	1½	2	2½	3	3½	4	5	6	8	10	12	14	16	18	20	24
150 Pound	Number		4	4	4	4	4	4	4	4	8	8	8	8	8	12	12	12	16	16	20	20
	Diameter		½	½	½	½	½	⅝	⅝	⅝	⅝	⅝	¾	¾	¾	⅞	⅞	1	1	1⅛	1⅛	1¼
	Length of Stud Bolts	1/16″ RF	2¼	2¼	2½	2½	2¾	3	3¼	3½	3½	3½	3¾	3¾	4	4½	4½	5	5¼	5¾	6	6¾
		RTJ	...	...	3	3	3¼	3½	3¾	4	4	4	4¼	4¼	4½	5	5	5½	5¾	6¼	6½	7¼
	Length of Mach. Bolts	1/16″ RF	1¾	2	2	2¼	2¼	2¾	3	3	3	3	3¼	3¼	3½	3¾	4	4¼	4½	4¾	5¼	5¾
300 Pound	Number		4	4	4	4	4	8	8	8	8	8	8	12	12	16	16	20	20	24	24	24
	Diameter		½	⅝	⅝	⅝	¾	⅝	¾	¾	¾	¾	¾	¾	⅞	1	1⅛	1⅛	1¼	1¼	1¼	1½
	Length of Stud Bolts	1/16″ RF	2½	2¾	3	3	3½	3¼	3¾	4	4¼	4¼	4½	4¾	5¼	6	6½	6¾	7¼	7½	8	9
		RTJ	3	3¼	3½	3½	4	4	4½	4¾	5	5	5¼	5½	6	6¾	7¼	7½	8	8¼	8¾	10
	Length of Mach. Bolts	1/16″ RF	2	2½	2½	2¾	3	3	3¼	3½	3¾	3¾	4	4¼	4¾	5¼	5¾	6	6½	6¾	7	7¾
400 Pound	Number		4	4	4	4	4	8	8	8	8	8	8	12	12	16	16	20	20	24	24	24
	Diameter		½	⅝	⅝	⅝	¾	⅝	¾	¾	⅞	⅞	⅞	⅞	1	1⅛	1¼	1¼	1⅜	1⅜	1½	1¾
	Length of Stud Bolts	¼″ RF	3	3¼	3½	3¾	4	4	4½	4¾	5¼	5¼	5½	5¾	6½	7¼	7¾	8	8½	8¾	9½	10½
		RTJ	3	3¼	3½	3¾	4	4¼	4¾	5	5½	5½	5¾	6	6¾	7½	8	8¼	8¾	9	9¾	11
		M & F T & G	2¾	3	3¼	3½	3¾	3¾	4¼	4½	5	5	5¼	5½	6¼	7	7½	7¾	8¼	8½	9¼	10¼
600 Pound	Number		4	4	4	4	4	8	8	8	8	8	8	12	12	16	20	20	20	20	24	24
	Diameter		½	⅝	⅝	⅝	¾	⅝	¾	¾	⅞	⅞	1	1	1⅛	1¼	1¼	1⅜	1½	1⅝	1⅝	1⅞
	Length of Stud Bolts	¼″ RF	3	3¼	3½	3¾	4	4	4½	4¾	5¼	5½	6¼	6½	7½	8¼	8½	9	9¾	10½	11¼	12¾
		RTJ	3	3¼	3½	3¾	4	4¼	4¾	5	5½	5¾	6½	6¾	7¾	8½	8¾	9¼	10	10¾	11½	13¼
		M & F T & G	2¾	3	3¼	3½	3¾	3¾	4¼	4½	5	5¼	6	6¼	7¼	8	8¼	8¾	9½	10¼	11	12½

900 Pound	Number		4	4	4	4	4	8	8	8	...	8	8	12	12	16	20	20	20	20	20	20
	Diameter		3/4	3/4	7/8	7/8	1	7/8	1	7/8	...	1 1/8	1 1/4	1 1/8	1 3/8	1 3/8	1 3/8	1 1/2	1 5/8	1 7/8	2	2 1/2
	Length of Stud Bolts	1/4" RF	4	4 1/4	4 3/4	4 3/4	5 1/4	5 1/2	6	5 1/2	...	6 1/2	7 1/4	7 1/2	8 1/2	9	9 3/4	10 1/2	11	12 3/4	13 1/2	17
		RTJ	4	4 1/4	4 3/4	4 3/4	5 1/4	5 3/4	6 1/4	5 3/4	...	6 3/4	7 1/2	7 1/2	8 3/4	9 1/4	10	11	11 1/21	13 1/4	14	17 3/4
		M & F T & G	3 3/4	4	4 1/2	4 1/2	5	5 1/4	5 3/4	5 1/4	...	6 1/4	7	7 1/4	8 1/4	8 3/4	9 1/2	10 1/4	10 3/4	12 1/4	13 1/4	16 3/4
1500 Pound	Number		4	4	4	4	4	8	8	8	...	8	8	12	12	12	16	16	16	16	16	16
	Diameter		3/4	3/4	7/8	7/8	1	7/8	1	1 1/8	...	1 1/4	1 1/2	1 3/8	1 5/8	1 7/8	2	2 1/4	2 1/2	2 3/4	3	3 1/2
	Length of Stud Bolts	1/4" RF	4	4 1/4	4 3/4	4 3/4	5 1/4	5 1/2	6	6 3/4	...	7 1/2	9 1/2	10	11 1/4	13 1/4	14 3/4	16	17 1/2	19 1/4	21	24
		RTJ	4	4 1/4	4 3/4	4 3/4	5 1/4	5 3/4	6 1/4	7	...	7 3/4	9 3/4	10 1/4	11 3/4	13 1/2	15 1/4	16 3/4	18 1/2	20 1/4	22 1/4	25 1/2
		M & F T & G	3 3/4	4	4 1/2	4 1/2	5	5 1/4	5 3/4	6 1/2	...	7 1/4	9 1/4	9 3/4	11	13	14 1/2	15 3/4	17 1/4	19	20 3/4	23 3/4
2500 Pound	Number		4	4	4	4	4	8	8	8	...	8	8	8	12	12	12	...	...	...	...	...
	Diameter		3/4	3/4	7/8	1	1 1/8	1	1 1/8	1 1/4	...	1 1/2	1 3/4	2	2	2 1/2	2 3/4	...	...	...	...	...
	Length of Stud Bolts	1/4" RF	4 3/4	4 3/4	5 1/4	5 3/4	6 1/2	6 3/4	7 1/2	8 1/2	...	9 3/4	11 1/2	13 1/2	15	19	21	...	...	...	...	...
		RTJ	4 3/4	4 3/4	5 1/4	6	6 3/4	7	7 3/4	8 3/4	...	10 1/4	12 1/4	14	15 1/2	20	22	...	...	...	...	...
		M & F T & G	4 1/2	4 1/2	5	5 1/2	6 1/4	6 1/2	7 1/4	8 1/4	...	9 1/2	11 1/4	13 1/4	14 3/4	18 3/4	20 3/4	...	...	...	...	...

DERIVATION OF FLANGE MAXIMUM ALLOWABLE PRESSURE

INTEGRAL TYPE	1. Calculate Moments M_1 through M_5 as follows:	@ Design Temperature	@ Ambient Temperature
	M_1 = (Lesser of 1.5 S_{fo} or 2.5 S_{fa}) $\frac{\lambda g_1^2 B}{f}$		
	$M_2 = \frac{S_{fo}\lambda Bt^2}{1.33te + 1}$		
	$M_3 = \frac{S_{fo}\lambda Bt^2}{Y\lambda - Z(1.33te + 1)}$		
	$M_4 = \frac{2S_{fo}\lambda Bt^2 g_1^2}{ft^2 + (1.33te + 1)g_1^2}$		
	$M_5 = \frac{2S_{fo}\lambda Bt^2 g_1^2}{ft^2 + Y\lambda g_1^2 - Z(1.33te + 1)g_1^2}$		
LOOSE TYPE	M_{MAX} = Lesser of M_1 thru M_5		
	1. Calculate the Maximum Allowable Moment	@ Design Temperature	@ Ambient Temperature
	$M_{MAX} = \frac{S_{fo}t^2 B}{Y}$		

2.

$$A_{m(MAX)} = \frac{2M_{MAX}(@\text{Ambient Temperature})}{h_G S_a} - A_b$$

Note : If $A_{m2} > A_{m(MAX)}$, then the gasket width, seating stress, or bolting is insufficient.

3. Determine the Maximum Allowable Pressure set by the Maximum Allowable Moment: (*Operating Condition*)

$$\frac{M_{MAX}(@\text{Design Temperature})}{0.785B^2h_D + 6.28bGmh_G + 0.785(G^2 - B^2)h_T}$$

4. Determine the Maximum Allowable Pressure set by $A_{m(MAX)}$: (*Gasket Seating*)

$$\frac{S_b A_{m(MAX)}}{6.28bGm + 0.785G^2}$$

5. The Maximum Allowable Pressure = the lesser of 3. or 4.

Note that this pressure includes any static head applicable for the case under consideration.

Maximum Allowable Pressure = _____

MAWP is based on corroded condition at design temperature.
When M_{MAX} is governed by M_2: Check integral type flange for new & uncorroded condition.
MAP (cold & corroded) is based on corroded condition @ ambient temperature.
MAP (new & cold) is based on new condition @ ambient temperature.

PROCEDURE 2-8

DESIGN OF SPHERICALLY DISHED COVERS

1	DESIGN CONDITIONS				
Design pressure, P		Allowable Stresses			
Design temperature		Flange		Bolting	
Flange material		Design temp., S_{fo}		Design temp., S_b	
Bolting material		Amb. temp., S_{fa}		Amb. temp., S_a	

2	GASKET AND FACING DETAILS		
Gasket		Facing	

3 TABLES 2-3 AND 2-4		4 LOAD AND BOLT CALCULATIONS			
N		$W_{m2} = b\pi Gy$		A_m = greater of W_{m2}/S_a or W_{m1}/S_b	
b		$H_P = 2b\pi GmP$			
G		$H = G^2\pi P/4$		A_b	
y		$W_{m1} = H_P + H$		$W = 0.5(A_m + A_b)S_a$	
m					

5	GASKET WIDTH CHECK
$N_{min} = A_bS_a/2y\pi G$	

6	MOMENT CALCULATIONS				
Load		× Lever Arm		= Moment	
Operating					
$H_D = \pi B^2P/4$		$h_D = 0.5(C - B)$		$M_D = H_Dh_D$	
$H_G = H_P$		$h_G = 0.5(C - G)$		$M_G = H_Gh_G$	
$H_T = H - H_D$		$h_T = 0.5(h_D + h_G)$		$M_T = H_Th_T$	
$H_r = H_D/\tan\beta_1$		h_r		$M_r = H_rh_r$	
β Calculation					
$\beta_1 = \text{arc sin}\dfrac{B}{2L + t}$		$M_o = M_D + M_G + M_T \pm M_r$ *Note:* M_r is (+) if ℄ of head is below the center of gravity; (−) if above.			
Seating					
$H_G = W$		h_G		$M_o' = Wh_G$	

7 FLANGE AND HEAD THICKNESS CALCULATION	
Head Thickness Required	
$t = \dfrac{5PL}{6S}$	
Flange Thickness Required	
$F = \dfrac{PB\sqrt{4L^2 - B^2}}{8S_{fo}(A - B)}$	
$J = \dfrac{M}{S_{fo}B}\left\lvert\dfrac{A + B}{A - B}\right\rvert$ where M = M_o or M_o', whichever is greater	
$T = F + \sqrt{F^2 + J}$	

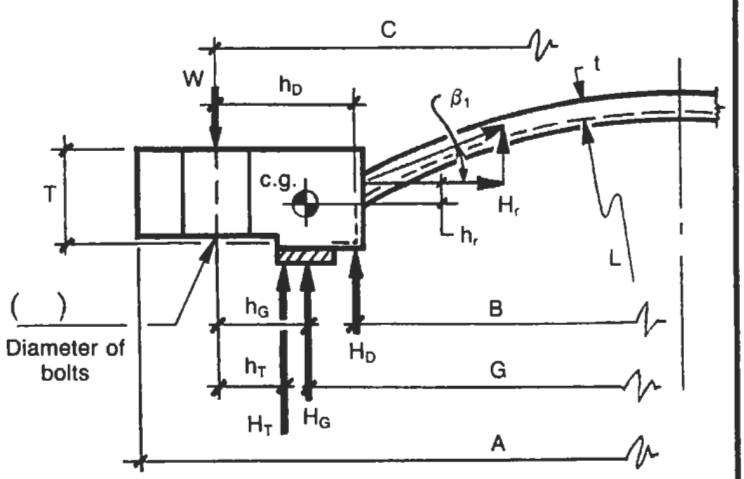

Figure 2-21. Dimensional data and forces for a spherically dished cover.

PROCEDURE 2-9

DESIGN OF BLIND FLANGES WITH OPENINGS [1, 4]

1	DESIGN CONDITIONS				
Design pressure, P		Allowable Stresses			
Design temperature		Flange		Bolting	
Flange material		Design temp., S_{fo}		Design temp., S_b	
Bolting material		Atm. temp., S_{fa}		Atm. temp., S_a	
Corrosion allowance					

2	GASKET AND FACING DETAILS		
Gasket		Facing	

3	TABLES 2-3 AND 2-4	4	LOAD AND BOLT CALCULATIONS		
N		$W_{m2} = b\pi Gy$		A_m = greater of W_{m2}/S_a or W_{m1}/S_b	
b		$H_P = 2b\pi GmP$			
G (see below)		$H = G^2\pi P/4$		A_b	
y		$W_{m1} = H_P + H$		$W = 0.5(A_m + A_b)S_a$	
m				$h_G = 0.5(C - G)$	

5	THICKNESS AND REINFORCEMENT CALCULATIONS	
Dimension, G		
If $b_o \leq 0.25$ in., G = mean gasket diameter		
If $b_o > 0.25$ in., G = lesser of raised face diameter or gasket O.D. − 2b		
Thickness Required		
Operating, t_o [1, UG-34(c)(2)] (See Note 1)		Seating, t_G
$t_o = G\sqrt{\frac{0.3P}{S_{fo}} + \frac{1.9W_{m1}h_G}{S_{fo}G^3}}$		$t_G = G\sqrt{\frac{1.9Wh_G}{S_{fa}G^3}}$

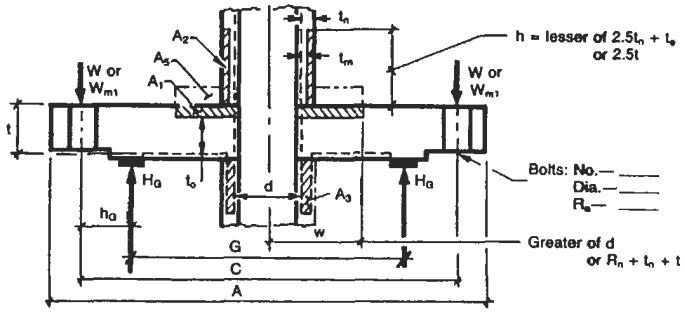

Figure 2-22. Dimensional data and forces for a blind flange.

Reinforcement			
$t_m = \frac{PR_n}{SE - 0.6P}$		$A_3 = 2t_nh$	
$A_r = 0.5dt_o$		A_4 = area of welds	
$A_1 = (t - t_o)(2w - d)$		$A_5 = t_e$(O.D. pad − O.D. nozzle)	
$A_2 = 2h(t_n - t_m)$		$\Sigma A = A_1$ through A_5	
		$\Sigma A > A_r$	

Notes

1. Reinforcement is only required for operating conditions not bolt up.
2. Options in lieu of calculating reinforcement:
   Option 1—No additional reinforcement is required if flange thickness is greater than $1.414\,t_o$.
   Option 2—If opening exceeds one-half the nominal flange diameter, the flange may be computed as an optional-type reducing flange.
   Option 3—No additional reinforcement is required if t_o is calculated substituting 0.6 for 0.3 in the equation for t_o (doubling of c value).
3. For terms and Tables 2-3 and 2-4, see Procedure 2-7.

PROCEDURE 2-10

BOLT TORQUE REQUIRED FOR SEALING FLANGES [10–13]

Notation

A_b = cross-sectional area of bolts, in.^{2}
A_g = actual joint-contact area of gasket, in.^{2}
b = effective gasket seating width, in.
d = root diameter of threads, in.
d_m = pitch diameter of threads, in.
G = diameter at location of gasket load reaction, in.
M = external bending moment, in.-lb
m = gasket factor
N = gasket width, in.
n = number of bolts
E_b = modulus of elasticity of bolting material at temperature, psi
E_g = modulus of elasticity of gasket material at temperature, psi
P = internal pressure, psi
P_e = equivalent pressure including external loads, psi
P_r = radial load, lb
P_T = test pressure, psi
F = restoring force of gasket (decreasing compression force) from initial bolting strain, lb
F_{bo} = initial tightening force, lb
ℓ_b = effective length of bolt, mid nut to mid nut, in.
W = total tightening force, lb
$W_{m1} = H + H_p$ = required bolt load, operating, lb
W_{m2} = required bolt load, gasket seating, lb
y = gasket unit seating load, psi
H = total hydrostatic end force, lb
H_P = total joint-contact surface compression load, lb
T = initial tightening torque required, ft-lb
t_g = thickness of gasket, in.
t_n = thickness of nut, in.
K = total friction factor between bolt/nut and nut/ flange face
w = width of ring joint gasket, in.

Note: See Procedure 2-7 for values of G, N, m, b, and y.

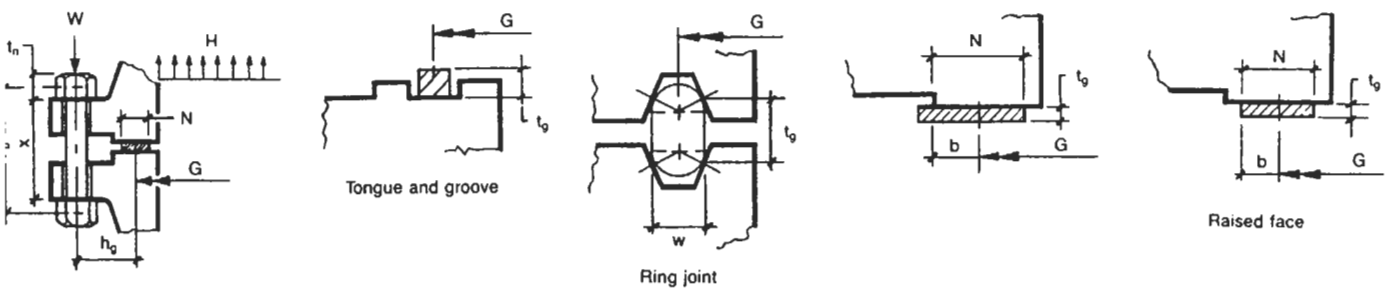

Figure 2-23. Flange and joint details.

Table 2-6
Bolting Dimensional Data

Size	¾ in.	⅞ in.	1 in.	1⅛ in.	1¼ in.	1⅜ in.	1½ in.	1⅝ in.
d	0.6273	0.7387	0.8466	0.9716	1.0966	1.2216	1.3466	1.4716
d_m	0.6850	0.8028	0.9188	1.0438	1.1688	1.2938	1.4188	1.5438
t_n	0.7344	0.8594	0.9844	1.1094	1.2188	1.3438	1.4688	1.5938
Size	**1¾ in.**	**1⅞ in.**	**2 in.**	**2¼ in.**	**2½ in.**	**2¾ in.**	**3 in.**	**3¼ in.**
d	1.5966	1.7216	1.8466	2.0966	2.3466	2.5966	2.8466	3.0966
d_m	1.6688	1.7938	1.9188	2.1688	2.4188	2.6688	2.9188	3.1688
t_n	1.7188	1.8438	1.9688	2.2031	2.4531	2.7031	2.9531	3.1875

Note: 3/4 and 7/8 in. bolts are UNC series threads. All others are 8 series threads. All dimensions are from ANSI B 18.2.

Table 2-7
Modulus of Elasticity, E_b, 10^6 psi

	Temperature, °F								
Material	**70°**	**200°**	**300°**	**400°**	**500°**	**600°**	**700°**	**800°**	**900°**
Carbon steel A-307-B	27.9	27.7	27.4	27.0	26.4	25.7	24.8	23.4	18.5
Low alloy A-193-B7, B16, B7M	29.9	29.5	29.0	28.6	28.0	27.4	26.6	25.7	24.5
Straight chrome A-193-B6, B6X	29.2	28.7	28.3	27.7	27.0	26.0	24.8	23.1	22.1
Stainless A-193-B8 series	28.3	27.7	27.1	26.6	26.1	25.4	24.8	24.1	23.4

Note: Values per ASME Code, Section II.

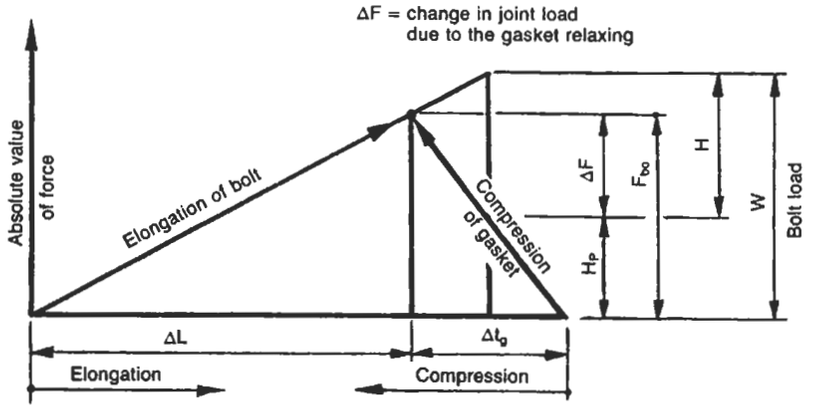

Figure 2-24. Typical joint diagram.

DESIGN DATA		GASKET DATA		BOLTING DATA	
Flange size		Type		Nominal size	
Design pressure, P		Diameter of raised face		Quantity n	
Test pressure, P_T		O.D., I.D.		d	
		N or w		d_m	
Moment, M		y		E_b	
Radial load, Pr		m		$A_b = \frac{\pi d^2 n}{4}$	
		Eg			
Friction factor, K		tg			
Design temperature		b		$\ell_b = x + t_n$	
		G			

Modulus of Elasticity of Gasket Material, E_g

- Ring joint and flat metal: Select values from ASME Section II, or Appendix K of this book.
- Comp asb = 70 ksi
- Rubber = 10 ksi
- Grafoil = 35 ksi
- Teflon = 24 ksi
- Spiral wound = 569 ksi

Friction Factor, K

- Lubricated = 0.075–0.15
- Nonlubricated = 0.15–0.25

Calculations

- *Equivalent pressure, P_e, psi.*

$$P_e = \frac{16M}{\pi G^3} + \frac{4P_r}{\pi G^2} + P$$

- *Hydrostatic end force, H, lb.*

$$H = \frac{\pi G^2 P_e}{4}$$

- *Total joint-contact-surface compression load, H_p, lb.*

$$H_P = 2b\pi GmP_e$$

- *Minimum required bolt load for gasket seating, W_{m2}, lb.*

$$W_{m2} = \pi bGy$$

- *Actual joint area contact for gasket, A_g, in.^{2}*

$$A_g = 2\pi bG$$

- *Decreasing compression force in gasket, ΔF, lb.*

$$\Delta F = \frac{H}{1 + \frac{A_b E_b t_g}{A_g E_g l_b}}$$

- *Initial required tightening force (tension), F_{bo}, lb.*

$$F_{bo} = H_p + \Delta F$$

- *Total tightening force required to seal joint, W, lb.*

$$W = \text{greater of } F_{bo} \text{ or } W_{m2}$$

- *Required torque, T, ft-lb.*

$$T = \frac{KWd_m}{12n}$$

Notes

1. Bolted joints in high-pressure systems require an initial preload to prevent the joint from leaking. The loads which tend to open the joint are:
   a. Internal pressure.
   b. Thermal bending moment.
   c. Dead load bending moment.
2. Either stud tensioners or torque wrenches are used for prestressing bolts to the required stress for gasket seating. Stud tensioners are by far the most accurate. Stud tension achieved by torquing the nut is affected by many variables and may vary from 10% to 100% of calculated values. The following are the major variables affecting tension achieved by torquing:
   a. Class of fit of nut and stud.
   b. Burrs.
   c. Lubrication.
   d. Grit, chips, and dirt in threads of bolts or nuts.
   e. Nicks.
   f. The relative condition of the seating surface on the flange against which the nut is rotated.
3. Adequate lubrication should be used. Nonlubricated bolting has an efficiency of about 50% of a well-lubricated bolt. For standard applications, a heavy graphite and oil mixture works well. For high temperature service (500°F to 1000°F), a high temperature thread compound may be used.

Table 2-8
Bolt Torques

Torque Required in ft-lb to Produce the Following Bolt Stress

Bolt Size	15 ksi	30 ksi	45 ksi	60 ksi
½ –13	15	30	45	60
⅝ –11	30	60	90	120
¾ –10	50	100	150	200
⅞ –9	80	160	240	320
1–8	123	245	368	490
1⅛ –8	195	390	533	710
1¼ –8	273	500	750	1000
1⅜ –8	365	680	1020	1360
1½ –8	437	800	1200	1600
1⅝ –8	600	1100	1650	2200
1¾ –8	775	1500	2250	3000
1⅞ –8	1050	2000	3000	4000
2–8	1125	2200	3300	4400
2¼ –8	–	3180	4770	6360
2½ –8	–	4400	6600	8800
2¾ –8	–	5920	8880	11840
3–8	–	7720	11580	15440

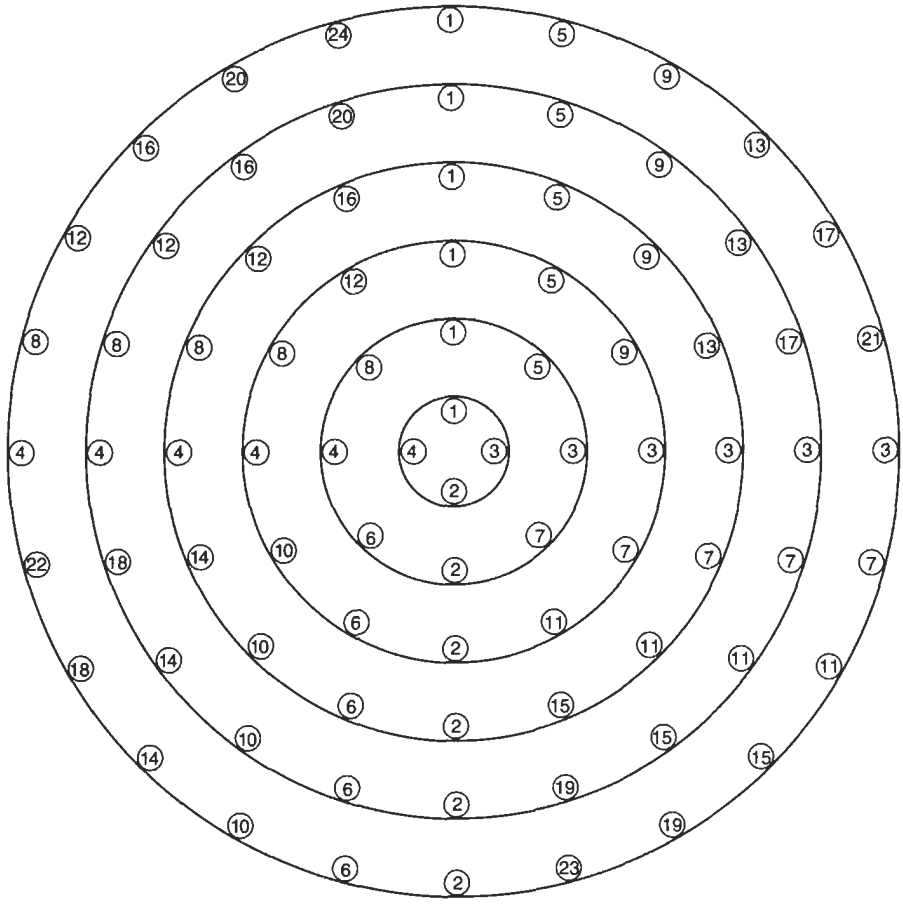

Figure 2-25. Sequence for tightening of flange bolts. *Note:* Bolts should be tightened to 1/3 of the final torque value at a time in the sequence illustrated in the figure. Only on the final pass is the total specified torque realized.

4. The stiffness of the bolt is only 1/3 to 1/5 that of the joint. Thus, for an equal change in deformation, the change of the load in the bolt must be only 1/3 to 1/5 of the change in the load of the joint.
5. Joints almost always relax after they have first been tightened. Relaxation of 10% to 20% of the initial preload is not uncommon. Thus an additional preload of quantity F is required to compensate for this "relaxing" of the joint.

PROCEDURE 2-11

DESIGN OF FLAT HEADS [1, 2, 5, 6, 7]

Notation

C = attachment factor
D = long span of noncircular heads, in.
d = diameter of circular heads or short span of noncircular heads, in.
E = joint efficiency (Cat. A seam only)
l = length of straight flange measured from tangent line, in.
P = internal pressure psi
r = inside corner radius of head, in.
S = code allowable stress, tension, psi
t = minimum required thickness of head, in.
t_f = thickness of flange of forged head, in.

t_h = thickness of head, in.
t_r = minimum required thickness of seamless shell, in.
t_s = thickness of shell, in.
t_w = thickness of weld joint, in.
t_p = minimum distance from outside of head to edge of weld prep, in.
Z = factor, dependent on d/D ratio
Q_o = shear force per unit length, lb/in.
N_o = axial tensile force per unit length, lb/in.
M_o = radial bending moment, in.-lb/in.
ν = Poisson's ratio, 0.3 for steel

$a_{1,2,3}$, $b_{1,2,3}$ = Influence coefficients for head

$a_{4,5,6}$, $b_{4,5,6}$ = Influence coefficients for shell

Formulas

- *Circular heads.*

$$t = d\sqrt{\frac{CP}{SE}}$$

- *Noncircular heads.*

$$t = d\sqrt{\frac{ZCP}{SE}}$$

where $Z = 3.4 - \frac{2.4d}{D}$; < 2.5

- *Dimensionless factors.*

$$m = \frac{t_r}{t_s}$$

$$\beta = \sqrt[4]{\frac{12(1-\nu^2)}{d^2 t_s^2}}$$

$$a_1 = (-)3(1-\nu)\frac{d}{t_h}$$

$$a_2 = 2(1-\nu)$$

$$a_3 = \frac{3d(1-\nu)}{32t_h}$$

$$a_4 = (-)\frac{t_h}{t_s}\left[\frac{(\beta d)^2}{2}\right]$$

$$a_5 = (-)\frac{t_h}{t_s}\left(\frac{\beta d}{2}\right)$$

$$a_6 = (-)\frac{t_h}{t_s}\left(\frac{2-\nu}{8}\right)$$

$$b_1 = \frac{6(1-\nu)d^2}{(\beta d)^2 t_s t_h}$$

$$b_2 = (-)\frac{3(1-\nu)d}{(\beta d)^2 t_s}$$

$$b_3 = (-)\frac{3(1-\nu)d^2}{16(\beta d)^2 t_s t_h}$$

$$b_4 = (-)(\beta d)\left(\frac{t_h}{t_s}\right)^2$$

$$b_5 = (-)0.5\left(\frac{t_h}{t_s}\right)^2$$

$$b_6 = 0$$

Cases

Case 1 (Figure 2-26)

1. C = 0.17 for forged circular or noncircular heads.
2. $r \geq 3t_h$
3. C = 0.1 for circular heads if

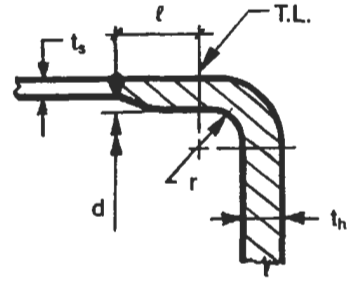

Figure 2-26. Case 1: Flanged head [1, Section UG-34 (a)].

$$1 < \left(1.1 - \frac{0.8t_s^2}{t_h^2}\right)\sqrt{dt_h}$$

or

$$t_s > 1.12t_h\sqrt{1.1 - \frac{1}{\sqrt{dt_h}}}$$

for length $2\sqrt{dt_s}$ and taper is 4:1 minimum.

Case 2 (Figure 2-27)

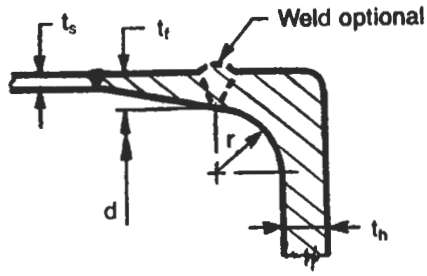

Figure 2-27. Case 2: Forged head [1, Section UG-34(b-1)].

1. $C = 0.17$
2. $t_f \geq 2t_s$
3. $r \geq 3t_f$
4. For forged circular or noncircular heads.

Case 3 (Figure 2-28)

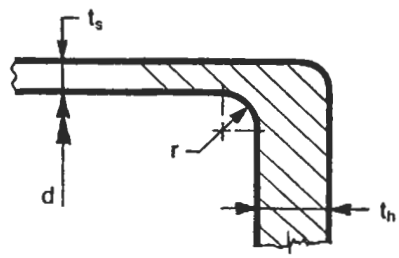

Figure 2-28. Case 3: Integrally forged head [1, Figure G-34 (b-2)].

1. $C = 0.33\,m$ but > 0.2
2. $r \geq 0.375$ in. if $t_s \leq 1.5$ in.
3. $r \geq 0.25t_s$ if t_s is greater than 1.5 in. but need not be greater than 0.75 in.

Case 4 (Figure 2-29)

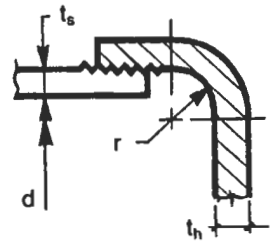

Figure 2-29. Case 4: Screwed flat head [1, Section UG-34(c)].

1. $C = 0.3$
2. $r \geq 3t_h$
3. Design threads with 4:1 safety factor against failure by shear, tension, or compression due to hydrostatic end force.
4. Seal welding optional.
5. Threads must be as strong as standard pipe threads.

Case 5 (Figure 2-30)

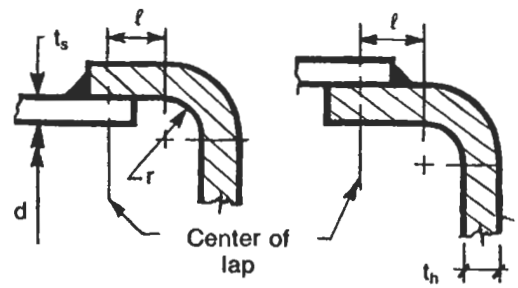

Figure 2-30. Case 5: Lap welded head [1, Section UG-34(c)].

1. Circular heads: $C = 0.13$ if

$$\ell > \left(1.1 - \frac{0.8t_s^2}{t_h^2}\right)\sqrt{dt_h}$$

2. Noncircular heads and circular heads regardless of ℓ : $C = 0.2$.
3. $r \geq 3\,t_h$

Case 6 (Figure 2-31)

1. $C = 0.13$
2. $d \leq 24$ in.
3. $0.05 < t_h/d < 0.25$

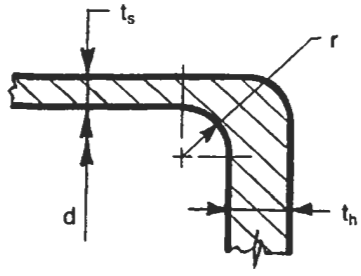

Figure 2-31. Case 6: Integrally forged head [1, Section UG-34(d)].

4. $t_h \geq t_s$
5. $r \geq 0.25t_h$
6. Head integral with shell by upsetting, forging, or spinning.
7. Circular heads only.

Case 7 (Figure 2-32)

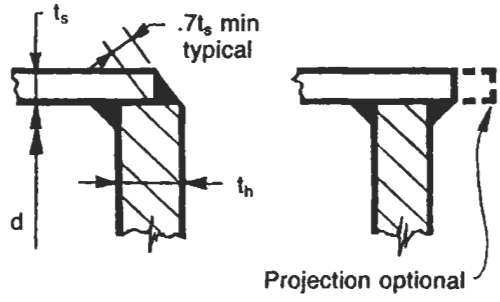

Figure 2-32. Case 7: Welded flat heads [1, Section UG-34(e)(f)].

1. Circular heads: $C = 0.33\,m$ but ≥ 0.2. If $m < 1$, then shell cannot be tapered within $2\sqrt{dt_s}$ from inside of head.
2. Noncircular heads: $C = 0.33$
3. Liquid penetrant (L.P.) or magnetic particle test (M.T.) end of shell and O.D. of head if t_s or t_h is greater than 1/2 in. thick (before and after welding).

Case 8 (Figure 2-33)

1. Circular heads: $C = 0.33\,m$ but ≥ 0.2.

   $t_w > 2t_r$ and $> 1.25t_s$ but $\leq t_h$

   If $m < 1$, then shell cannot be tapered within $2\sqrt{dt_s}$ from inside of head.
2. Noncircular heads: $C = 0.33$

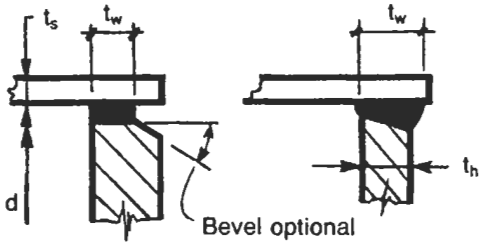

Figure 2-33. Case 8: Welded flat heads (Full penetration welds required) [1, Section UG-34(g)].

3. See Note 3 in Case 7.

Case 9 (Figure 2-34)

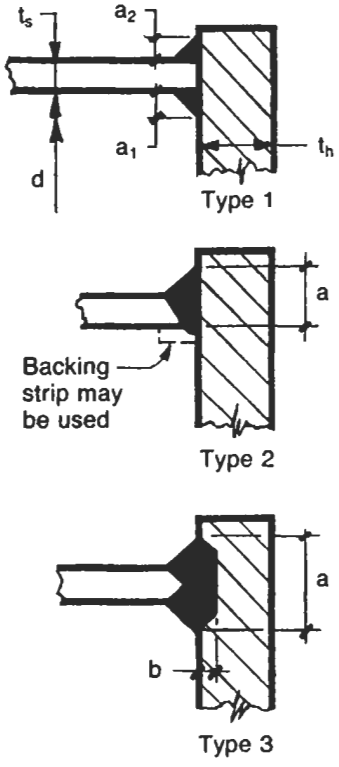

Figure 2-34. Case 9: Welded flat heads [1, Section UG-34(h), UW-13.2 (f)(g)].

1. Circular heads only.
2. $C = 0.33$
3. $t_s \geq 1.25t_r$
4. L.P./M.T. end of shell and O.D. of head if t_s or t_h is greater than 1/2 in. thick (before and after welding).

5. *Type 1*: $a_1 + a_2 > 2t_s$
   $0.5a_2 < a_1 < 2a_2$
   Type 2: $a > 2t_s$
   Type 3: $a + b > 2t_s$
   $b = 0$ is permissible

Case 10 (Figure 2-35)

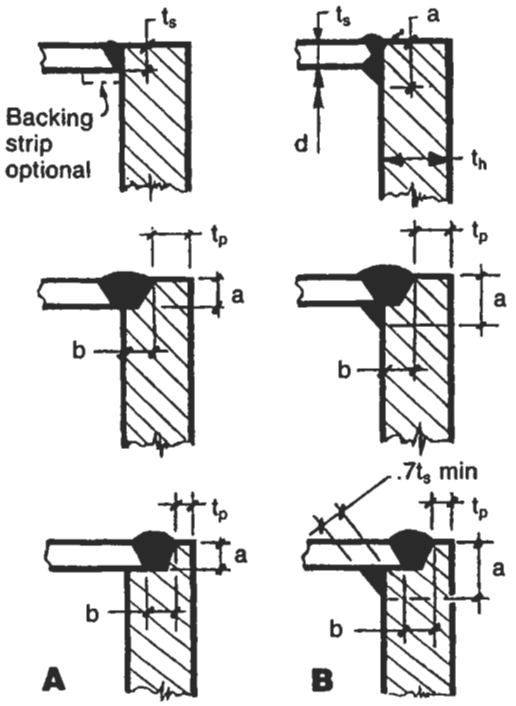

Figure 2-35. Case 10: Welded flat heads [1, Section UG-34(h)(i)].

1. For Figure 2-34A: $C = 0.33$ and $t_s \geq 1.25t_r$
2. For Figure 2-34B: $C = 0.33$ m but ≥ 0.2
3. $t_p > t_s$ or 0.25 in.
4. $t_w \geq t_s$
5. $a + b > 2t_s$
6. $a \geq t_s$
7. L.P./M.T end of shell and O.D. of head if t_s or t_h is greater than ½ in. thick (before and after welding).

Case 11 (Figure 2-36)

1. $C = 0.3$
2. All possible means of failure (by shear, tension, compression, or radial deformation, including flaring, resulting from pressure and differential thermal expansion) are resisted by factor of safety of 4:1.
3. Seal welding may be used.
4. Circular heads only.

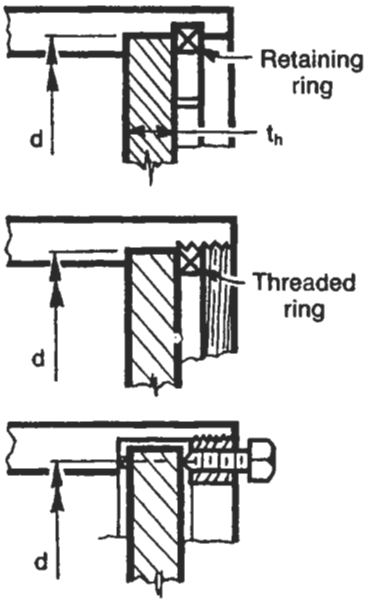

Figure 2-36. Case 11: Heads attached by mechanical lock devices [1, Section UG-34(m)(n)(o)].

Case 12 (Figure 2-37)

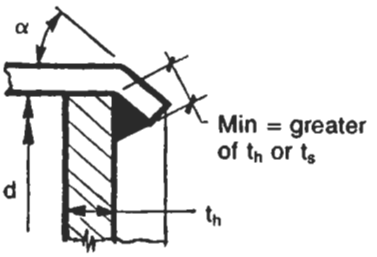

Figure 2-37. Case 12: Crimped head [1, Section UG-34(r)].

1. $C = 0.33$
2. Circular plates only.
3. $d = 18$-in. maximum.
4. $\alpha = 30°$ minimum, 45° maximum.

Case 13 (Figure 2-38)

1. $C = 0.3$
2. Circular plates only.
3. $d = 18$-in. maximum.
4. $\alpha = 30°$ minimum, 45° maximum.
5. $t_s/d > P/S > 0.05$
6. Maximum allowable working pressure < S/5d.
7. Crimping must be done at the proper forging temperature.

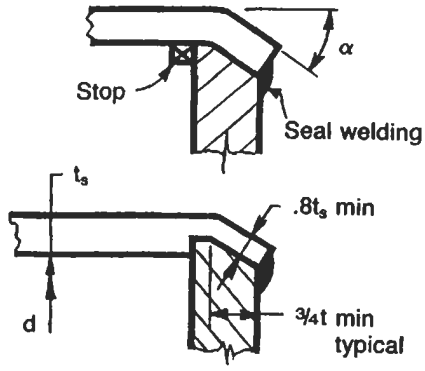

Figure 2-38. Case 13: Crimped heads [1, Section UG-34(s)].

Stresses in Flat Heads

Maximum stress occurs at the junction, is axial in direction, and may be in either the head or the shell. When $t_h/t_s \leq 1$, the maximum stress is in the head at the junction. When $t_h/t_s > 1$, the maximum stress is in the shell at the junction. The bending moment M_o is a result of internal forces N_o and Q_o.

- *Internal force, Q_o.*

$$Q_o = Pd_m\left[\frac{(a_4 - a_1)b_3 - (a_3 - a_6)(b_4 - b_1)}{(a_4 - a_1)(b_5 - b_2) - (a_5 - a_2)(b_4 - b_1)}\right]$$

- *Bending moment, M_o.*

$$M_o = Pd_m^2\left[\frac{(a_3 - a_6)(b_5 - b_2) - (a_5 - a_2)b_3}{(a_4 - a_1)(b_5 - b_2) - (a_5 - a_2)(b_4 - b_1)}\right]$$

- *Axial stress in shell at junction, σ_s* [5, Equation 6.122].

$$\sigma_s = \frac{Pd_m}{4t_s} + \left|\frac{6M_o}{t_s^2}\right|$$

- *Axial stress in shell at junction, σ_h* [5, Equation 6.132].

$$\sigma_h = \left|\frac{Q_o}{t_h}\right| + \left|\frac{6M_o}{t_h^2} - \frac{3Q_o}{t_h}\right|$$

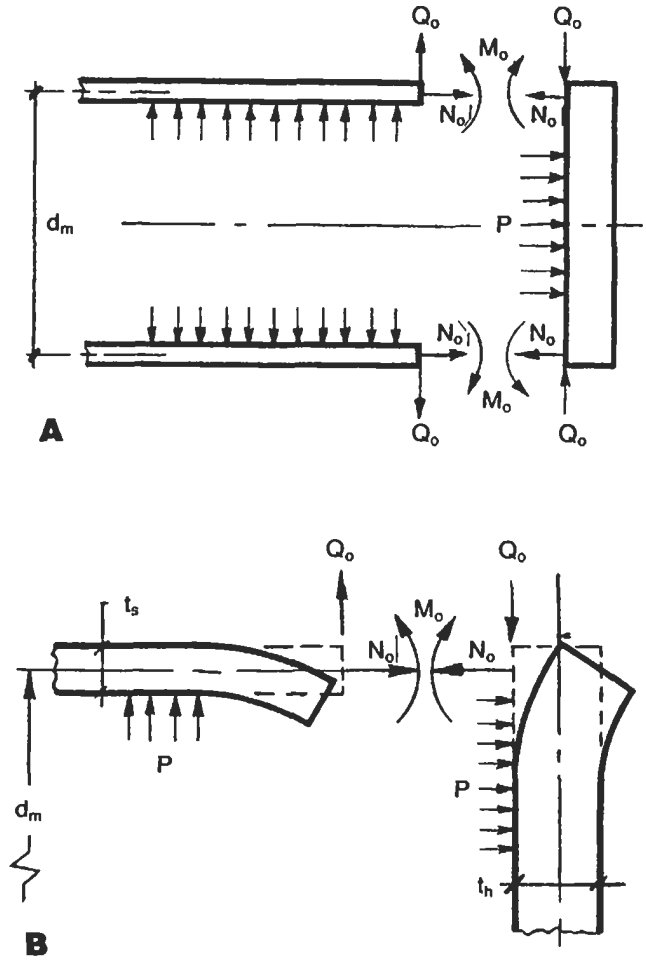

Figure 2-39. Discontinuity at flat head and cylindrical shell juncture.

- *Primary bending stress in head, σ_b. Note:* Primary bending stress is maximum at the center of the head.

$$\sigma_b = (\pm)\frac{3(3 + \nu)}{8}\left[\frac{Pd^2}{4t_h^2}\right]$$

(−) Inside head, compression

(+) Outside head, tension

PROCEDURE 2-12

REINFORCEMENT FOR STUDDING OUTLETS

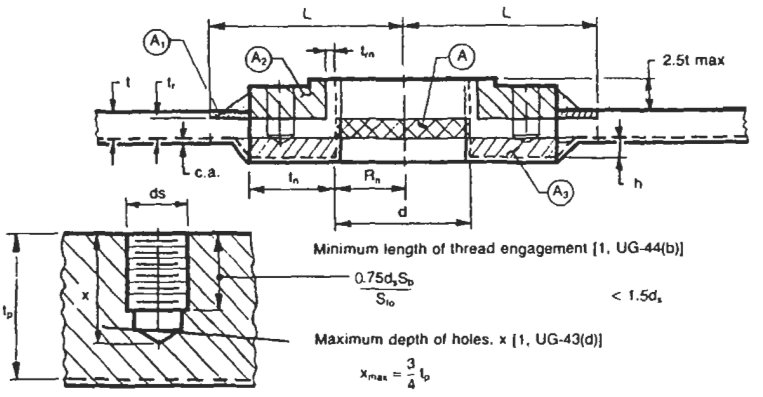

Figure 2-40. Typical studding outlet.

Table 2-9
Tapped Hole Area Loss, S, in.^{2}*

d_s	5/8 in.	3/4 in.	7/8 in.	1 in.	1 1/8 in.	1 1/4 in.	1 3/8 in.	1 1/2 in.	1 5/8 in.	1 3/4 in.	1 7/8 in.	2 in.	2 1/4 in.
X	1.11	1.33	1.55	1.77	2.00	2.44	2.66	2.88	3.10	3.32	3.56	3.98	4.44
S	1.28	1.84	2.50	3.28	4.15	5.12	6.20	7.38	8.66	10.05	11.55	13.1	16.6

*Values of x and s are based on the shoulder of the hole at a depth of $1.5d_s$ and fully threaded.

Calculation of Area of Reinforcement (Figure 2-40)

$A = (dt_rF) + S$

$L =$ Greater of d or $R_n + t_n + t$

$A_1 = 2(L - R_n - t_n)(t - t_r)$

$A_2 = 2(t_p - h - t_r)(t_n - t_{rn})$

$A_3 = 2(ht_n)$

$A_T = A_1 + A_2 + A_3$

Notes

1. Check plane which is nearest the longitudinal axis of the vessel and passes through a pair of studded holes.
2. S_b = allowable stress of stud material at design temperature.
   S_{fo} = allowable stress of flange material at design temperature.
3. A_2 as computed ignores raised face.

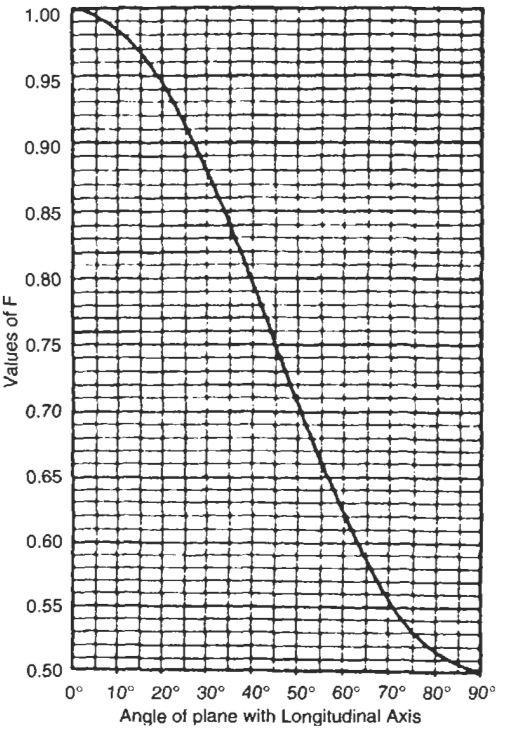

Figure 2-41. Chart for determining the value of F. (Reprinted by permission from ASME Code, Section VIII, Div. 1, Figure UG-37.)

PROCEDURE 2-13

DESIGN OF INTERNAL SUPPORT BEDS [8, 9]

Notation

A = cross-sectional area of bolt, $in.^2$
A_T = total area supported by beam, ln^2
B = ratio of actual force to allowable force per inch of weld
b = width of bearing bar, grating, in.
d = depth of bearing bar, grating, in.
D = vessel inside diameter, ft
E = modulus of elasticity, $in.^3$
F = total load of bed, lb
F_b = allowable bending stress, psi
F_y = minimum specified yield strength, psi
w_f = fillet weld size, in.
h = height of beam seat or length of clip, in.
I = moment of inertia, $in.^4$
K = distance from bottom of beam to top of fillet of web, in. [9]
ℓ = length of beam, width of ring, or unsupported width of grating, ft or in.
M = bending moment, in.-lb
N = minimum bearing length, in.
n = number of bolts
P = concentrated load, lb
ΔP = differential pressure between top and bottom of bed, (−) up, (+) down, psi
p = uniform load, psf
R = end reactions, lb
R_a = root area of bolts, $in.^2$
S = allowable shear stress in bolts or fillet welds, psi
t = thickness of clip, gusset, or ring, in.
w = uniform load, lb/ft
Z = section modulus, $in.^3$
F_t = equivalent concentrated load, lb

Process vessels frequently have internal beds that must be supported by the vessel shell. Sand filters, packed columns, and reactors with catalyst beds are typical examples. The beds are often supported by a combination of beam(s), grating, and a circumferential ring which supports the periphery of the grating. The beams are in turn attached to the shell wall by either clips or beam seats. This procedure offers a quick way for analyzing the various support components.

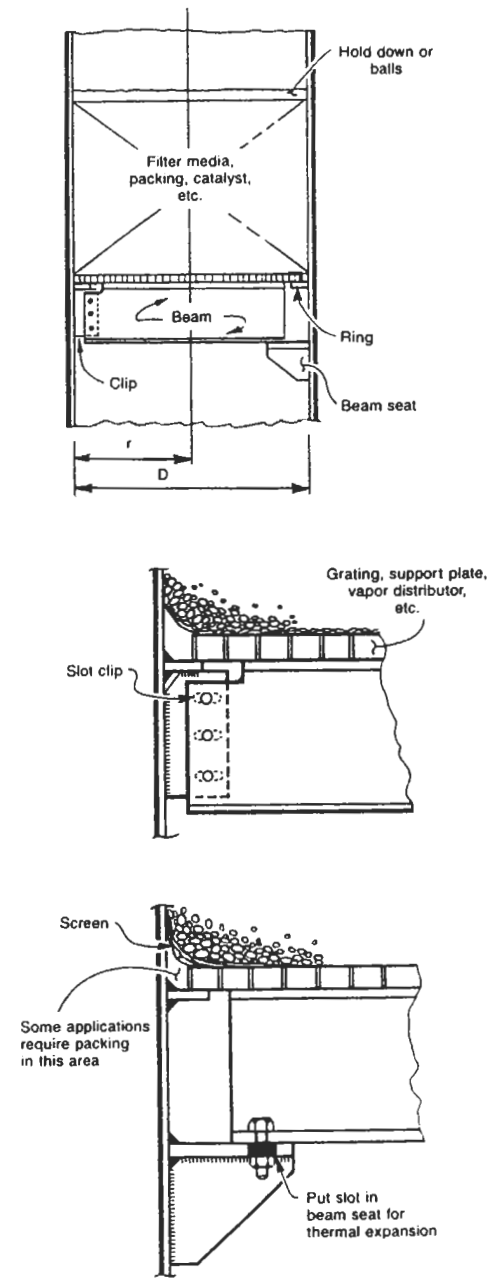

Figure 2-42. Typical support arrangements and details of an internal bed.

CASE 1: SINGLE BEAM

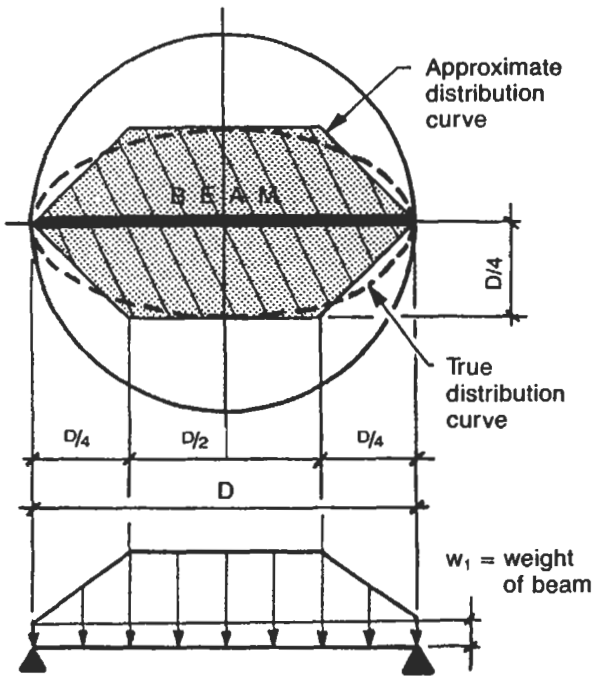

Figure 2-43. Loading diagram of single-beam support. Area of loading = 48%.

WEIGHTS	
Corrosion allowance	
Specific gravity	
Liquid holdup (%)	
Free area	
Packing/catalyst unit weight	
Volume of packing/catalyst	
Packing/catalyst total weight	
Entrained liquid weight	
Weight of liquid above bed	
Differential pressure	
Weight of grating	
Weight of beam (est.)	
Miscellaneous	
Total load, F =	
Uniform load, $p = \frac{F}{\pi r^2}$	

BEAM		
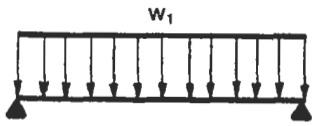 [9, #1]	$M_1 = \frac{w_1 D^2}{8} =$	
	$R_1 = \frac{w_1 D}{2} =$	
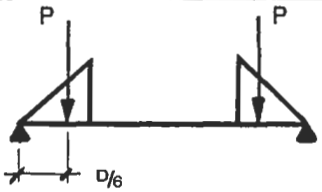 [9, #9]	$P = p\left(\frac{D}{4}\right)^2 =$	
	$R_2 = P =$	
	$M_2 = \frac{PD}{6} =$	
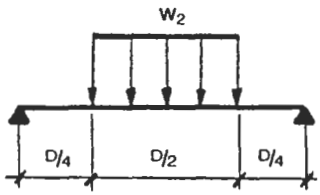 [9, #4]	$w_2 = \frac{pD}{2} =$	
	$R_3 = \frac{w_2 D}{4} =$	
	$M_3 = \frac{R_3 D}{4} + \frac{R_3^2}{2w_2} =$	

MOMENT AND REACTION CALCULATIONS				
Total moment $M = M_1 + M_2 + M_3$		$Z_{reqd} = \frac{M}{F_b}$	New	
Total end reaction $R = R_1 + R_2 + R_3$			Corroded	
Select beam and add appropriate correction allowance to web and flange				

CASE 2: DOUBLE BEAM

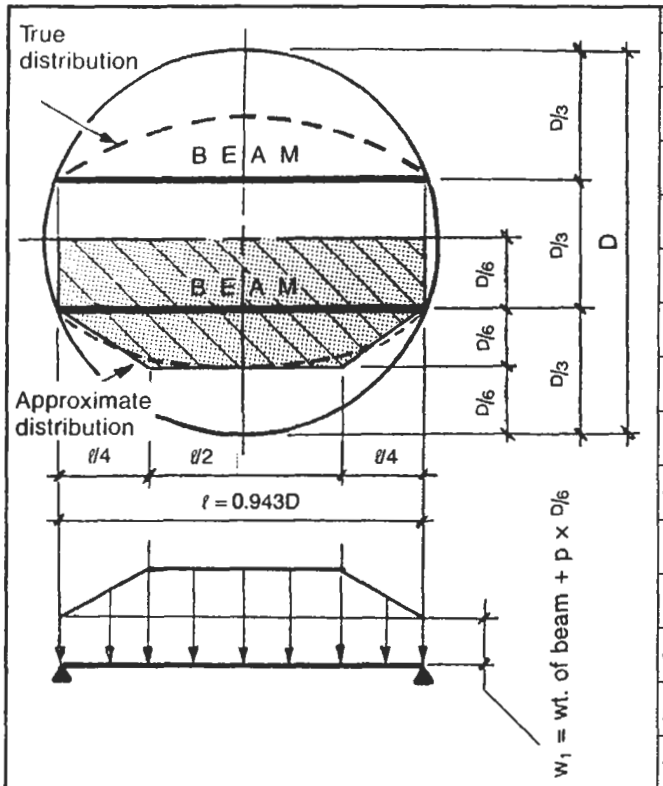

Figure 2-44. Loading diagram of double-beam support. Area of loading = 37% per beam.

WEIGHTS	
Corrosion allowance	
Specific gravity	
Liquid holdup (%)	
Free area	
Packing/catalyst unit weight	
Volume of packing/catalyst	
Packing/catalyst total weight	
Entrained liquid weight	
Weight of liquid above bed	
Differential pressure	
Weight of grating	
Weight of beam (est.)	
Miscellaneous	
Total load, F =	
Uniform load, $p = \frac{F}{\pi r^2}$	

BEAM

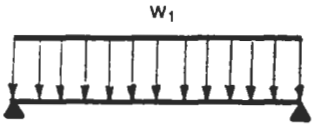

[9, Figure 1]

$M_1 = \frac{w_1 \ell^2}{8}$

$R_1 = \frac{w_1 \ell}{2}$

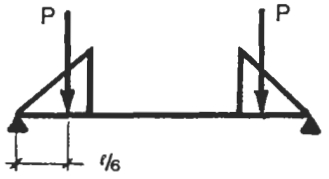

[9, Figure 9]

$P = \frac{pD\ell}{48}$

$R_2 = P$

$M_2 = \frac{P\ell}{6}$

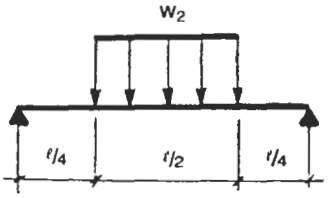

[9, Figure 4]

$w_2 = \frac{pD}{6}$

$R_3 = \frac{w_2 \ell}{4}$

$M_3 = \frac{R_3 \ell}{4} + \frac{R_3^2}{2w_2}$

MOMENT AND REACTION CALCULATIONS

Total moment $M = M_1 + M_2 + M_3$		$Z_{reqd} = \frac{M}{F_b}$	New	
Total end reaction $R = R_1 + R_2 + R_3$			Corroded	
Select beam and add appropriate correction allowance to web and flange				

Clip (Figure 2-45, Table 2-10)

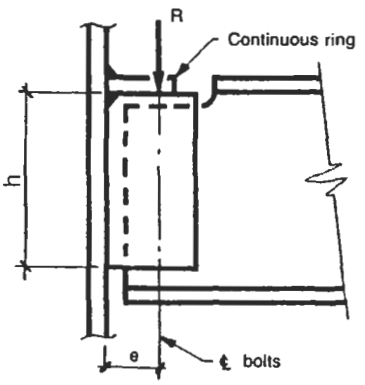

Figure 2-45. Typical clip support.

R = total end reactions, lb
M = moment in clip, in.-lb
t = thickness required, clip, in.
F_b = allowable stress, bending, psi
A_r = area of bolt required, $in.^2$
n = number of bolts

- *Moment in clip, M.*

$$M = Re$$

- *Thickness required, t.*

$$t = \frac{6M}{h^2 F_b}$$

- *Area required, A_r.*

$$A_r = \frac{R}{Sn}$$

Select appropriate bolts.

Quantity— _____
Size— _____
Material— _____

Table 2-10
Bolting Data

Size R_a	⅝ in. 0.202	¾ in. 0.302	⅞ in. 0.419	1 in. 0.551	1⅛ in. 0.693
Allowable Shear Stress, S, psi					
Material		A-307		A-325	
Single		10,000		15,000	
Double		20,000		30,000	

Beam Seat (Figure 2-46)

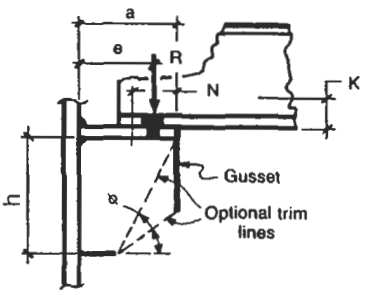

Figure 2-46. Typical beam seat support.

N = minimum bearing length, in.
t = thickness required, gusset, in.
t_w = thickness, web, in.
K = vertical distance from bottom of beam flange to top of fillet of beam web, in. [9]
B = ratio of actual force to allowable force per inch of weld
w_f = fillet weld size, in.
F_y = yield strength, psi

- *Thickness required, gusset, t.*

$$t = \frac{R(6e - 2a)}{F_b a^2 \sin^2\phi}$$

- *Length, N.*

$$N = \frac{R}{t_w(0.75F_y)} - K$$

- *Ratio, B.*
For E60 welds:

$$B = \frac{R}{23{,}040 w_f}$$

For E70 welds:

$$B = \frac{R}{26{,}880 w_f}$$

- *Required height, h.*

$$h = \sqrt{\frac{B}{2}(B + \sqrt{B^2 + 64e^2})}$$

Notes for Beam Seat

1. Make width of beam seat at least 40% of h.
2. Make fillet weld leg size no greater than $0.75t_w$.
3. Make stiffener plate thickness greater of t_w or $1.33 w_f$.

Ring (Figure 2-47)

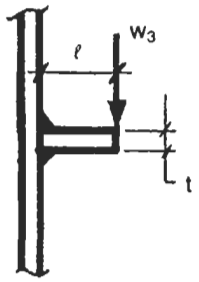

Figure 2-47. Loading diagram of a continuous ring.

Case 1: Single Beam

w_3 = maximum unit load on circular ring, lb/in.

$$w_3 = \frac{pD}{4}$$

$$M = w_3\ell$$

$$t = \sqrt{\frac{6M}{F_b}}$$

Select appropriate ring size.

Case 2: Two Beams

$$w_3 = \frac{pD}{6}$$

$$M = w_3\ell$$

$$t = \sqrt{\frac{6M}{F_b}}$$

Select appropriate ring size.

Grating

F_b = maximum allowable fiber stress = 18,000 psi
M = maximum moment at midspan, ft-lb
p = uniform load, psf
E = modulus of elasticity, 10^6 psi
n = number of bearing bars per foot
δ = deflection, in.
I = moment of inertia per foot of width, in.^{4}
Z = section modulus per foot of width, in.^{3}
ℓ = maximum unsupported width, ft.

Case 1: single beam—$\ell = 0.5D$
Case 2: two beams—$\ell = 0.333D$

b = width of bearing bar (corroded), in.
d = depth of bearing bar (corroded), in.

$$M = \frac{P\ell^2}{8}$$

$$Z_{reqd} = \frac{12M}{F_b}$$

Proposed bearing bar size:

$$Z = \frac{nbd^2}{6}$$

$$I = \frac{nbd^3}{12}$$

$$\delta = \frac{5p\ell(12\ell)^3}{384EI}$$

Select grating size.

Notes

1. Recommended beam ratio, span over depth, should be between 15 and 18 (20 maximum).
2. For loading consider packing, catalyst, grating, weight of beam(s), liquid above packing or filter media, entrained liquid, and differential pressure acting down on bed. Entrained liquid = volume × specific gravity × liquid holdup × free area × 62.4 lb per cu ft.
3. Minimum gusset thickness of beam seat should not be less than the web thickness of the beam.
4. Main bearing bars of grating should run perpendicular to direction of support beams.

Table 2-11
Summary of Forces and Moments

No. of Beams	Beam	A_T	F_T	R	M
1 Beam	—	$0.3927D^2$	$0.3927pD^2$	$0.1864pD^2$	$0.0565pD^3$
2 Beams	—	$0.2698D^2$	$0.2698pD^2$	$0.1349pD^2$	$0.0343pD^3$
3 Beams	Outer	$0.1850D^2$	$0.1850pD^2$	$0.0925pD^2$	$0.0219pD^3$
	Center	$0.2333D^2$	$0.2333pD^2$	$0.1167pD^2$	$0.0311pD^3$
4 Beams	Inner	$0.1925D^2$	$0.1925pD^2$	$0.0963pD^2$	$0.0240pD^3$
	Outer	$0.1405D^2$	$0.1405pD^2$	$0.0703pD^2$	$0.0143pD^3$
5 Beams	Inner	$0.1548D^2$	$0.1548pD^2$	$0.0774pD^2$	$0.0185pD^3$
	Outer	$0.1092D^2$	$0.1092pD^2$	$0.0546pD^2$	$0.0107pD^3$
	Center	$0.1655D^2$	$0.1655pD^2$	$0.0828pD^2$	$0.0208pD^3$

PROCEDURE 2-14

NOZZLE REINFORCEMENT

The following are only guidelines based on Section VIII, Division 1 of the ASME Code [1]. This is not an attempt to cover every possibility nor is it to become a substitute for using the Code.

1. *Limits.*
   a. No reinforcement other than that inherent in the construction is required for nozzles [1, Section UG-36(c) (3)]:
      - 3-in. pipe size and smaller in vessel walls 3/8-in. and less.
      - 2-in. pipe size and smaller in vessel walls greater than 3/8 in.
   b. Normal reinforcement methods apply to [1, Section UG-36(b) (1)]:
      - *Vessels 60-in. diameter and less*—1/2 the vessel diameter but not to exceed 20 in.
      - *Vessels greater than 60-in. diameter*—1/3 the vessel diameter but not to exceed 40 in.
   c. For nozzle openings greater than the limits of Guideline 1b, reinforcement shall be in accordance with Para. 1-7 of ASME Code.

2. *Strength.*
   It is advisable but not mandatory for reinforcing pad material to be the same as the vessel material [1, Section UG-41]:
   a. If a *higher strength material* is used, either in the pad or in the nozzle neck, no additional credit may be taken for the higher strength.
   b. If a *lower strength material* is used, either in the pad or in the nozzle, then the area taken as reinforcement must be decreased proportionately by the ratio of the stress intensity values of the two materials. Weld material taken as reinforcement must also be decreased as a proportion, assuming the weld material is the same strength as the weaker of the two materials joined.

3. *Thickness.*
   While minimum thicknesses are given in Reference 1, Section UG-16(b), it is recommended that pads be not less than 75% nor more than 150% of the part to which they are attached.

4. *Width.*
   While no minimum is stated, it is recommended that re-pads be at least 2 in. wide.

5. *Forming.*
   Reinforcing pads should be formed as closely to the contour of the vessel as possible. While normally put on the outside of the vessel, re-pads can also be put inside providing they do not interfere with the vessel's operation [1, Section UG-82].

6. *Tell-tale holes.*
   Reinforcing pads should be provided with a 1/4-in. tapped hole located at least 45° off the longitudinal center line and given an air–soap suds test [1, Section UW-15(d)].

7. *Elliptical or obround openings.*
   When reinforcement is required for elliptical or obround openings and the long dimension exceeds twice the short dimension, the reinforcement across the short dimension shall be increased to guard against excessive distortion due to twisting moment [1, Section UG-36(a) (1)].

8. *Openings in flat heads.*
   Reinforcement for openings in flat heads and blind flanges shall be as follows [1, Section UG-39]:
   a. *Openings < 1/2 head diameter*—area to be replaced equals 0.5d (t_r), or thickness of head or flange may be increased by:
      - Doubling C value.
      - Using C = 0.75.
      - Increasing head thickness by 1.414.
   b. *Openings > 1/2 head diameter*—shall be designed as a bolted flange connection. See Procedure 2-15.

9. *Openings in torispherical heads.*
   When a nozzle opening *and* all its reinforcement fall within the dished portion, the required thickness of head for reinforcement purposes shall be computed using M = 1 [1, Section UG-37(a)].

10. *Openings in elliptical heads.*
    When a nozzle opening *and* all its reinforcement fall within 0.8D of an elliptical head, the required thickness of the head for reinforcement purposes shall be equal to the thickness required for a seamless sphere of radius K(D) [1, Section UG-37(a)].

11. *General.*
Reinforcement should be calculated in the corroded condition assuming maximum tolerance (minimum t). For non x-rayed vessels, t_r must be computed using a stress value of 0.8S [1, Section UG-37(a)].

12. *Openings through seams.* [1, Section UW-14].
    a. Openings that have been reinforced may be located in a welded joint. E = joint efficiency of seam for reinforcement calculations. ASME Code, Division 1, does not allow a welded joint to have two different weld joint efficiencies. Credit may not be taken for a localized x-rayed portion of a spot or non x-rayed seam.
    b. Small nozzles that are not required to be checked per the Code can be located in circumferential joints providing the seam is x-rayed for a distance three times the diameter of the opening with the center of the hole at midlength.

13. *Re-pads over seams.*
If at all possible, pads should not cover weld seams. When unavoidable, the seam should be ground flush before attaching the pad [1, Section UG-82].

14. *Openings near seams.*
Small nozzles (for which the Code does not require the reinforcement to be checked) shall not be located closer than 1/2 in. to the edge of a main seam. When unavoidable, the seam shall be x-rayed, per ASME Code, Section UW-51, a distance of one and a half times the diameter of the opening either side of the closest point [1, Section UW-14].

15. *External pressure.*
Reinforcement required for openings subject to external pressure only *or* where longitudinal compression governs shall only be 50% of that required for internal pressure and t_r is thickness required for external pressure [1, Section UG-37(d)].

16. *Ligaments.*
When there is a series of closely spaced openings in a vessel shell and it is impractical to reinforce each opening, the construction is acceptable, provided the efficiency of the ligaments between the holes is acceptable [1, Section UG-53].

17. *Multiple openings.* [1, Section UG-42].
    a. For two openings closer than 2 times the average diameters and where limits of reinforcement overlap, the area between the openings shall meet the following:
        - *Must have a combined area equal to the sum of the two areas.*
        - *No portion of the cross-section shall apply to more than one opening.*
        - *Any overlap area shall be proportioned between the two openings by the ratio of the diameters.*
        - *If the area between the openings is less than 50% of that required for the two openings, the supplemental rules of Para. 1–7(a) and (c) shall apply.*
    b. When more than two openings are to be provided with combined reinforcement:
        - *The minimum distance between the centers is 1⅓ the average diameters.*
        - *The area of reinforcement between the two nozzles shall be at least 50% of the area required for the two openings.*
    c. For openings less than 1⅓ times the average diameters:
        - *No credit may be taken for the area between the openings.*
        - *These openings shall be reinforced as in (d).*
    d. Multiple openings may be reinforced as an opening equal in diameter to that of a circle circumscribing the multiple openings.

18. *Plane of reinforcement.*
A correction factor f may be used for "integrally reinforced" nozzles to compensate for differences in stress from longitudinal to circumferential axis of the vessel. Values of f vary from 1.0 for the longitudinal axis to 0.5 for circumferential axis [1, Section UG-37].

WORKSHEET FOR NOZZLE REINFORCEMENT CALCULATIONS

VESSEL DESCRIPTION:						ITEM NO:						SIZE:		
	1	2	3	4	5	Nozzle	1	2	3	4	5			
Nozzle						t_n								
Location						t_{nc}								
Size and schedule						t_m								
P at elevation						Limit h								
I.D. New						A_2								
d (corroded)						A_3								
Shell/head t_{corr}						A_4								
Shell/head t_r						Pad size $t_e \times D_p$								
A						O.D. Nozzle								
Limit L						A_5								
A_1						A_T								

THICKNESS REQUIRED

Shell		Head		Nozzles					
$t_r = \frac{PR}{S - 0.6P}$		$t_m = \frac{PD}{2S - 0.2P}$		$t_m = \frac{PR_n}{S - 0.6P}$					
S, shell		*D		Nozzle					
		S, head		P					
*Note: D = R for hemi-heads D = 0.9D if nozzle and reinforcement lie within 0.8D of 2:1 head D = L if nozzle and reinforcement lie within dished portion of a flanged and dished head.				R_n					
				S					
				t_m					

FORMULAS

$A = dt_rF + 2t_nt_rF(1 - f_{r1})$		h = lesser of 2.5 t or 2.5 t_{nc} + t_e h_1 = lesser of 2.5 t or 2.5 (t_n − 2 c.a.)	
$A_1 = (2L - d)(t - Ft_r) - 2t_n(t - Ft_r)(1 - f_{r1})$			
$A_2 = 2h(t_n - t_m)f_{r1}$ $A_3 = 2h_1(t_n - 2\ c.a.)f_{r1}$		$f_{r1} = \frac{S_{noz}}{S_{shell}} < 1$	< 1
A_4 = (WELDS) = $(A_{41} + A_{43})f_{r1} + A_{42}\ f_{r4}$ $A_5 = (D_p - d - 2t_n)t_e\ f_{r4}$		$f_{r4} = \frac{S_{pad}}{S_{shell}} < 1$	< 1
$A_T = A_1 + A_2 + A_3 + A_4 + A_5$			
L = greater of d or $R_n + t + t_{nc}$			

DESIGN DATA

Corrosion allowance, c.a.		Specific gravity	
Design liquid level		Thinning allowance	

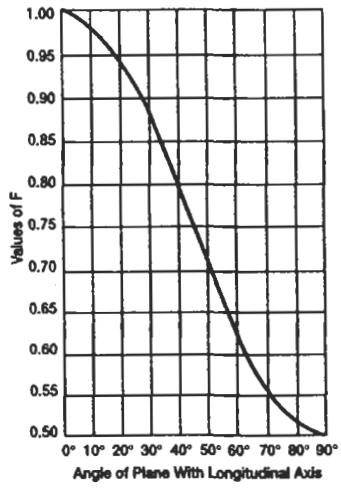

Figure 2-48. Chart for determining the value of F [1, Figure UG-37].

Notes: Assumes E = 1 & f_{r1} = 1.0 for nozzle abutting vessel wall

Figure 2-48. Chart for determining the value of F [1, Figure UG-37].

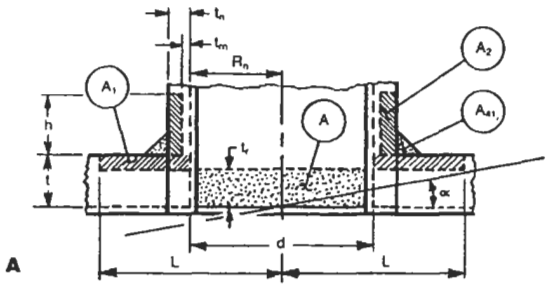

Figure 2-49. Typical nozzle connections.

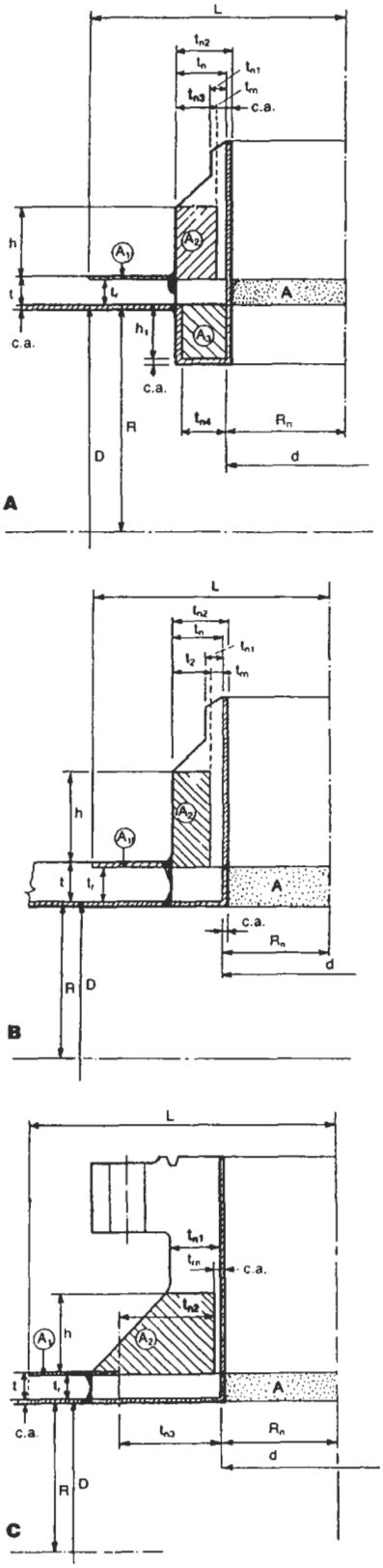

Figure 2-50. Typical self-reinforced nozzles.

PROCEDURE 2-15

DESIGN OF LARGE OPENINGS IN FLAT HEADS [1]

Notation

P = internal pressure, psi
M_o = bending moment in head, in.-lb
M_h = moment acting on end of hub or shell at juncture, in.-lb
M_D = component of moment M_o due to H_D, in.-lb
M_T = component of moment M_o due to H_T, in.-lb
H = hydrostatic end force, lb
H_D = hydrostatic end force on area of central opening, lb
$H_T = H - H_D$, lb
S_H = longitudinal hub stress, psi
S_R = radial stress in head, psi
S_T = tangential stress in head, psi
S_{HS} = longitudinal hub stress, shell, psi
S_{RS} = radial stress, head, at O.D., psi
S_{TS} = tangential stress, head, at O.D., psi
S_{HO} = longitudinal hub stress at central opening, psi
S_{RO} = radial stress, head, at central opening, psi
S_{TO} = tangential stress, head, at central opening, psi
Z, Z_1, Y, T, U, F, V, f, e, d, L, X_1, and θ are all factors.

Factor Formulas

1. Calculate geometry factors:

$$\frac{g_1}{g_o} =$$

$$K = \frac{A}{B_n} =$$

$$h_o = \sqrt{B_n g_o} =$$

$$\frac{h}{h_o} =$$

2. Using the factors calculated in Step 1, find the following factors in Procedure 2-7.

$$Z =$$
$$Y =$$
$$T =$$
$$U =$$
$$F =$$
$$V =$$
$$f =$$

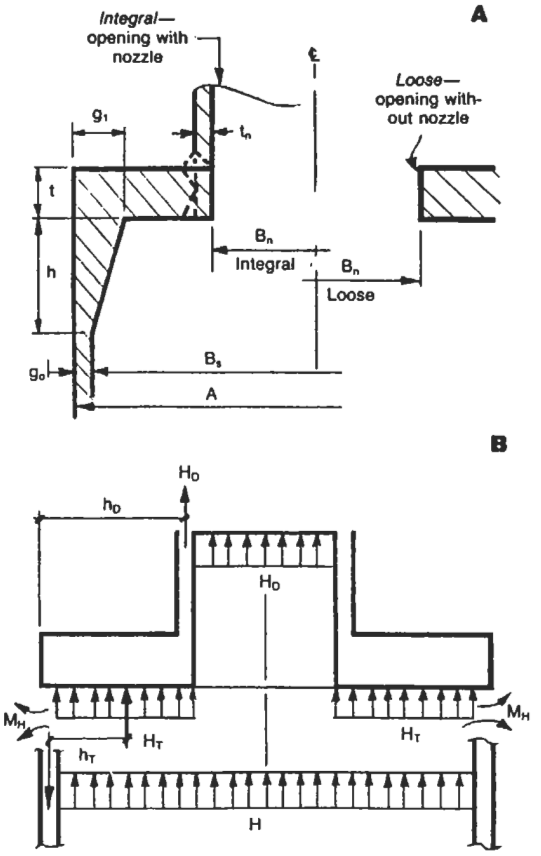

Figure 2-51. Dimensions (A) and loading diagram (B) for a flat integral head with opening.

3. Using the values found in the preceding steps, compute the following factors:

$$e = \frac{F}{h_o} =$$

$$d = \frac{U h_o g_o^2}{V} =$$

$$L = \frac{te + 1}{T} + \frac{t^3}{d} =$$

$$Z_1 = \frac{2K^2}{K^2 - 1} =$$

Stress and Moment Calculations

1. *Hydrostatic end forces, H, H_D, H_T.*

$$H = \frac{\pi B_s^2 P}{4}$$
$$H_D = \frac{\pi B_n^2 P}{4}$$
$$H_T = H - H_D$$

2. *Moment arms, h_D and h_T.*
   - Integral:

$$h_D = \frac{A - B_n - t_n}{2}$$

   - Loose:

$$h_D = \frac{A - B_n}{2}$$

   - Integral or loose:

$$h_T = \frac{B_s - B_n}{4} + \frac{g_o}{2}$$

3. *Moments.*

$$M_D = h_D H_D$$
$$M_T = h_T H_T$$
$$M_o = M_D + M_T$$

4. *Stresses in head and hub.*

$$S_H = \frac{f M_o}{L g_1^2 B_n}$$
$$S_R = \frac{(1.33te + 1)M_o}{Lt^2 B_n}$$

   - Integral:

$$S_T = \frac{Y M_o}{t^2 B_n} - Z S_R$$

   - Loose:

$$S_T = \frac{Y M_o}{t^2 B_n}$$

5. *Factor, θ.*
   - Integral:

$$B_I = B_n + g_o$$
If $f \geq 1$,
$$\theta = \frac{0.91(g_1/g_o)^2 B_I V S_H}{f h_o}$$

   - Loose:

$$\theta = \frac{B_n S_T}{t}$$

6. *Moment at juncture of shell and head, M_H.*

$$M_H = \frac{\theta}{\dfrac{1.74 h_o V}{g_o^3 B_I} + \dfrac{\theta}{M_o}\left(1 + \dfrac{Ft}{h_o}\right)}$$

where h_o, g_o, V, B_I, and F refer to shell.

7. *Factor X_1.*

$$X_1 = \frac{M_o - M_H\left(1 + \dfrac{Ft}{h_o}\right)}{M_o}$$

where F and h_o refer to shell.

8. *Stress at head-shell juncture.*

$$S_{HS} = \frac{1.1 X_1 \theta h_o f}{(g_1/g_o)^2 B_s V}$$
$$SRS = \frac{1.91 M_H\left(1 + \dfrac{Ft}{h_o}\right)}{B_s t^2} + \frac{0.64 F M_H}{B_s h_o t}$$
$$S_{TS} = \frac{X_1 \theta t}{B_s} - \frac{0.57 M_H\left(1 + \dfrac{Ft}{h_o}\right)}{B_s t^2} + \frac{0.64 FZ M_H}{B_s h_o t}$$

where B_s, F, h_o, Z, f, g_o, g_1, and V refer to shell.

9. *Calculate stresses at head-nozzle juncture.*

$$S_{HO} = X_1 S_H$$
$$S_{RO} = X_1 S_R$$
$$S_{TO} = X_1 S_T + \frac{0.64 F Z_1 M_H}{B_s h_o t}$$

where F, B_s, and h_o refer to shell.

Notes

1. This procedure is only applicable for integrally attached flat heads with centrally located openings which exceed one-half the head diameter. For applicable configurations see sketches in ASME Code, Figures UG-34(a), (b-1), (b-2), (d), or (g).
2. For details where inside corner of shell-head juncture is machined to a radius: $g_1 = g_o$ and $f = 1$.
3. The method employed in this procedure is to disregard the shell attached to the outside diameter of the flat head and then analyze the flat head with a central opening.
4. This procedure is based on appendix 14 of ASME Section VIII, Division 1.

PROCEDURE 2-16

FIND OR REVISE THE CENTER OF GRAVITY OF A VESSEL

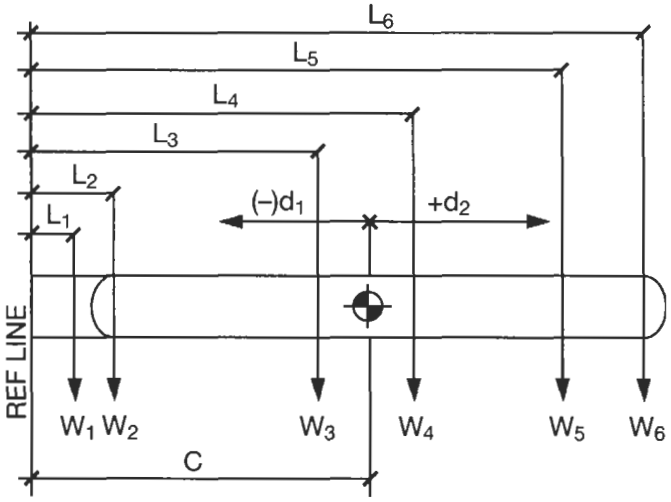

Figure 2-52. Load diagram for a typical vertical vessel.

Notation

C = distance to center of gravity, ft or in.
D' = revised distance to C.G., ft or in.
d_n = distance from original C.G. to weights to add or remove, (+) or (−) as shown, ft or in.
L_n = distance from REF line to C.G. of a component weight, ft or in.
W_n = weight of vessel component, contents or attachments, lb
W' = new overall weight, lb $W + \text{or} - \sum w_n$
W = overall weight, lb, $\sum W_n$
ω_n = revised unit weights, lb (+) to add weight
(−) to remove weight

To find the C.G.:

$$C = \frac{\sum L_n W_n}{W}$$

To revise C.G.:

$$D' = C \pm \frac{\sum d_n \omega_n}{W'}$$

PROCEDURE 2-17

MINIMUM DESIGN METAL TEMPERATURE (MDMT)

Notation

R = use the lesser of R_1 or R_2
R_1 = ratio of thickness required at MDMT to the corroded thickness
R_2 = ratio of the actual stress to the allowable stress
t_{MT} = thickness required of the part at MDMT, in.
t_{DT} = thickness required of the part at design temperature, in.
t_n = thickness of the part, new, in (exclusive of thinning allowance for heads and undertolerance for pipe)
t_c = thickness of the part, corroded, in.
C.a. = corrosion allowance, in.
E = joint efficiency
S_{MT} = allowable stress at MDMT, psi
S_{DT} = allowable stress at design temperature, psi
S_a = actual tension stress in part due to pressure and all loadings, psi
T_1 = lowest allowable temperature for a given part based on the appropriate material curve of Figure 2-55, degrees F
T_2 = reduction in MDMT without impact testing per Figure 2-54, degrees F

This MDMT procedure is used to determine the lowest permissible temperature for which charpy impact testing is or is not required. The ASME Code requires this be determined for every pressure vessel and the MDMT be stamped on the nameplate. While every pressure vessel has its own unique MDMT, this may or may not be the MDMT that is stamped on the nameplate. Not only does every pressure vessel have its own unique MDMT, but every component of that pressure vessel has an MDMT. The vessel MDMT is the highest temperature of all the component MDMT's. On occasion, the MDMT is specified by the end user as an arbitrary value. The vessel fabricator is then responsible to verify that the actual MDMT of every component used in that pressure vessel is lower than the arbitrary value requested for the nameplate stamping. Considering this, there are various definitions for MDMT depending on how it is used. The definitions follow:

1. *Arbitrary MDMT:* A discretionary, arbitrary temperature, specified by a user or client, or determined in accordance with the provisions of UG-20. Some users have a standard value that has been chosen as the lowest mean temperature of the site conditions, such as 15°F.
2. *Exemption MDMT:* The lowest temperature at which the pressure vessel may be operated at full design pressure without impact testing of the component parts.
3. *Test MDMT:* The temperature at which the vessel is charpy impact tested.

The ASME Code rules for MDMT are built around a set of material exemption curves as shown in Figure 2-55. These curves account for the different toughness characteristics of carbon and low alloy steel and determine at what temperature and corresponding thickness impact testing will become mandatory.

There is an additional exemption curve (see Figure 2-54), which allows a decrease in the MDMT of every component, and thus the vessel, depending on one of several ratios specified. This curve would permit carbon steel, without impact testing, to be used at a temperature of −150°F, provided the combined stresses are less than 40% of the allowable stress for that material. Granted, the vessel would be more than twice as thick as it needed to be for the pressure condition alone, but if the goal was to exempt the vessel from impact testing, it could be accomplished.

Since impact testing is a major expense to the manufacturer of a pressure vessel, the designer should do everything to avoid it. Impact testing can always be avoided but may not be the most economical alternative. Following these steps will help eliminate the need for impact testing and, at the same time, will provide the lowest MDMT.

1. Upgrade the material to a higher group.
2. Increase the thickness of the component to reduce the stress in the part.
3. Decrease the pressure at MDMT. This is a process change and may or may not be possible. Sometimes a vessel does not operate at full design pressure at the low temperature condition but has alternate conditions, such as shutdown or depressurization. These alternate low temperature conditions can also be stamped on the nameplate.

Formulas

$$R_1 = \frac{t_r E}{t_c}$$

$$R_2 = \frac{S_a}{S_{MT}}$$

$$t_c = t_n - C.a.$$

$$T_2 = (1 - R)100$$

$$MDMT = T_1 - T_2$$

Procedure

Step 1: Determine the lowest anticipated temperature to which the vessel will be subjected.

Step 2: Compare the lowest combined pressure-temperature case with the MDMT for each component.

Step 3: Determine if any components must be impact tested in their proposed material grade and thickness. This would establish the MDMT.

Step 4: Establish the overall MDMT as the highest value of MDMT for each of the component parts.

Notes

1. For flat heads, tubesheets, and blind flanges, the thickness used for each of the respective thickness' is that thickness divided by 4.
2. For corner, fillet, or lap-welded joints, the thickness used shall be the thinner of the two parts being joined.
3. For butt joints, the thickness used shall be the thickest joint.
4. For any Code construction, if the vessel is stress relieved and that stress relieving was not a Code requirement, the MDMT for that vessel may be reduced by 30° without impact testing.

Table 2-12
Determination of MDMT (Example)

Part	Material	Material Group	S_{MT} ksi	S_{DT} ksi	t_n	t_{DT} (3)	t_{MT} (3)	t_c	S_a ksi	R_1	R_2	T_1	T_2	MDMT °F
Shell	SA-516-70	B	17.5	16.6	1.00	0.869	0.823	0.875	13.97	0.799	0.798	31°	20.1°	+11
Head(1)	SA-516-70	B	17.5	16.6	0.857	0.653	0.620	0.732	14.89	0.847	0.851	21.8	15°	+7
10″ Noz(2)	SA-53-B	B	12.8	12.2	0.519	0.174	0.166	0.394	5.26	0.421	0.410	−5.18	59°	
10″ 300# Flg. (4)	SA-105	B	17.5	16.6	0.519	0.128	0.121	0.394	5.26	0.307	0.300	−5.18	70°	
30″ Blind (5)	SA-266-2	B	17.5	16.6	6.06	—	1.48	5.94	—	—	—	51°	105°	−54°
30″ Body Flg.	SA-266-2	B	17.5	16.6	◄			Same as Shell					►	+11
Wear PL	SA-516-70	B	17.5	16.6	1.00	—	—	1.00	—	—	—	—	—	+11(6)
Bolting	SA-193-B7	—	—	—	—	—	—	—	—	—	—	—	—	−40

Notes:
1. The governing thickness for heads is based on that portion of the head which is in tension. For a 2:1 S.E. head this is the crown position where R = 0.90.
2. Includes pipe 12½% under tolerance.
3. Thickness exclusive of C.a.
4. Thickness at the hub (weld attachment) governs.
5. The governing thickness of flat heads and blind flanges is 1/4 of actual thickness.
6. Since the tension stress in the wear plate is less than the tension stress in the shell, the MDMT for the shell will govern.

Design Conditions (for example)

D.T. = 700°F
P = 400 PSIG
C.a. = 0.125
R_i = 30″
E (Shell) = 0.85
E (Head) = 1.00
MDMT for vessel = +11°

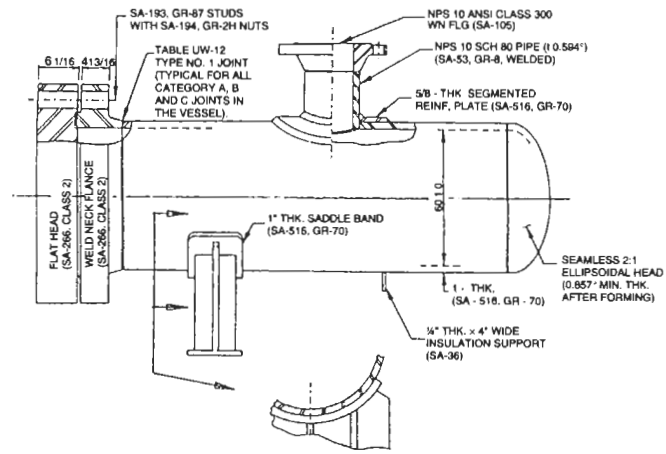

Figure 2-53. Dimensions of vessel used for MDMT example.

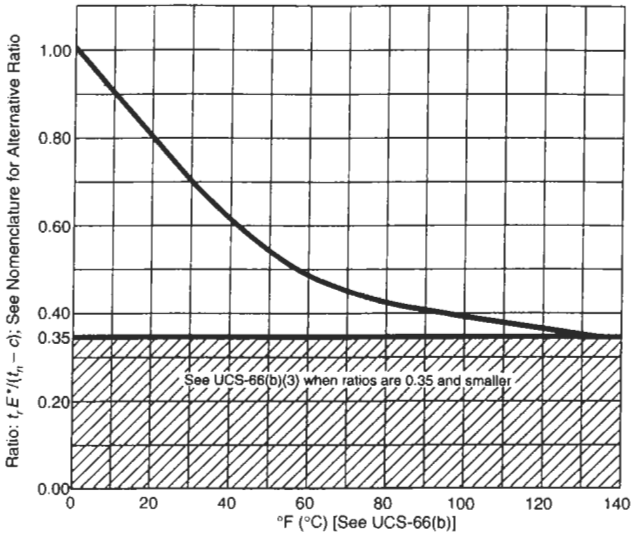

Nomenclature (Note reference to General Notes of Fig. UCS-66-2.)

t_r = required thickness of the component under consideration in the corroded condition for all applicable loadings [General Note (2)], based on the applicable joint efficiency E [General Note (3)]. in. (mm)

t_n = nominal thickness of the component under consideration before corrosion allowance is deducted, in. (mm)

c = corrosion allowance, in. (mm)

E^* = as defined in General Note (3).

Alternative Ratio = S^*E^* divided by the product of the maximum allowable stress value from Table UCS-23 times E, where S^* is the applied general primary membrane tensile stress and E and E^* are as defined in General Note (3)

Figure 2-54. Reduction in minimum design metal temperature without impact testing.

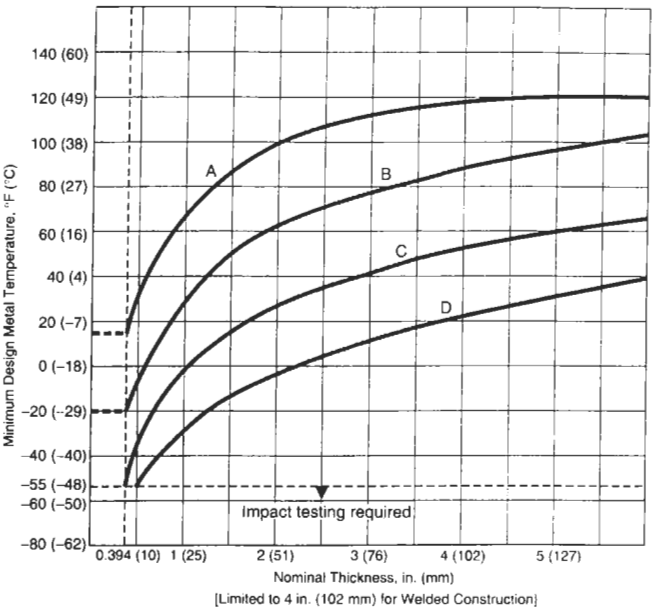

Figure 2-55. Impact test exemption curves.

General Notes on Assignment of Materials to Curves (Reprinted with permission from ASME Code, Section VIII, Div. 1.)

a. Curve A—all carbon and all low alloy steel plates, structural shapes, and bars not listed in Curves B, C, and D below.

b. Curve B
   1. SA-285 Grades A and B
      SA-414 Grade A
      SA-515 Grades 55 and 60
      SA-516 Grades 65 and 70 if not normalized
      SA-612 if not normalized
      SA-662 Grade B if not normalized
   2. all materials of Curve A if produced to fine grain practice and normalized which are not listed for Curves C and D below.
   3. except for bolting (see (e) below), plates, structural shapes, and bars, all other product forms (such as pipe, fittings, forgings, castings, and tubing) not listed for Curves C and D below.
   4. parts permitted under UG-11 shall be included in Curve B even when fabricated from plate that otherwise would be assigned to a different curve.

c. Curve C
   1. SA-182 Grades 21 and 22 if normalized and tempered
      SA-302 Grades C and D
      SA-336 Grades F21 and F22 if normalized and tempered
      SA-387 Grades 21 and 22 if normalized and tempered
      SA-516 Grades 55 and 60 if not normalized
      SA-533 Grades B and C
      SA-662 Grade A
   2. all material of Curve B if produced to fine grain practice and normalized and not listed for Curve D below.

d. Curve D
   SA-203
   SA-508 Class 1
   SA-516 if normalized
   SA-524 Classes 1 and 2
   SA-537 Classes 1 and 2
   SA-612 if normalized
   SA-622 if normalized

e. For bolting the following impact test exemption temperature shall apply:

Spec. No.	Grade	Impact Test Exemption Temperature, F
SA-193	B5	–20
SA-193	B7	–40
SA-193	B7M	–50
SA-193	B16	–20
SA-307	B	–20
SA-320	B L7, L7A, L7M, L43	Impact tested
SA-325	1, 2	–20
SA-354	BC	0
SA-354	BD	+20
SA-449	...	–20
SA-540	B23/24	+10

f. When no class or grade is shown, all classes or grades are included.

g. The following shall apply to all material assignment notes:
   1. Cooling rates faster than those obtained by cooling in air, followed by tempering, as permitted by the material specification, are considered to be equivalent to normalizing or normalizing and tempering heat treatments.
   2. Fine grain practice is defined as the procedures necessary to obtain a fine austenitic grain size as described in SA-20.

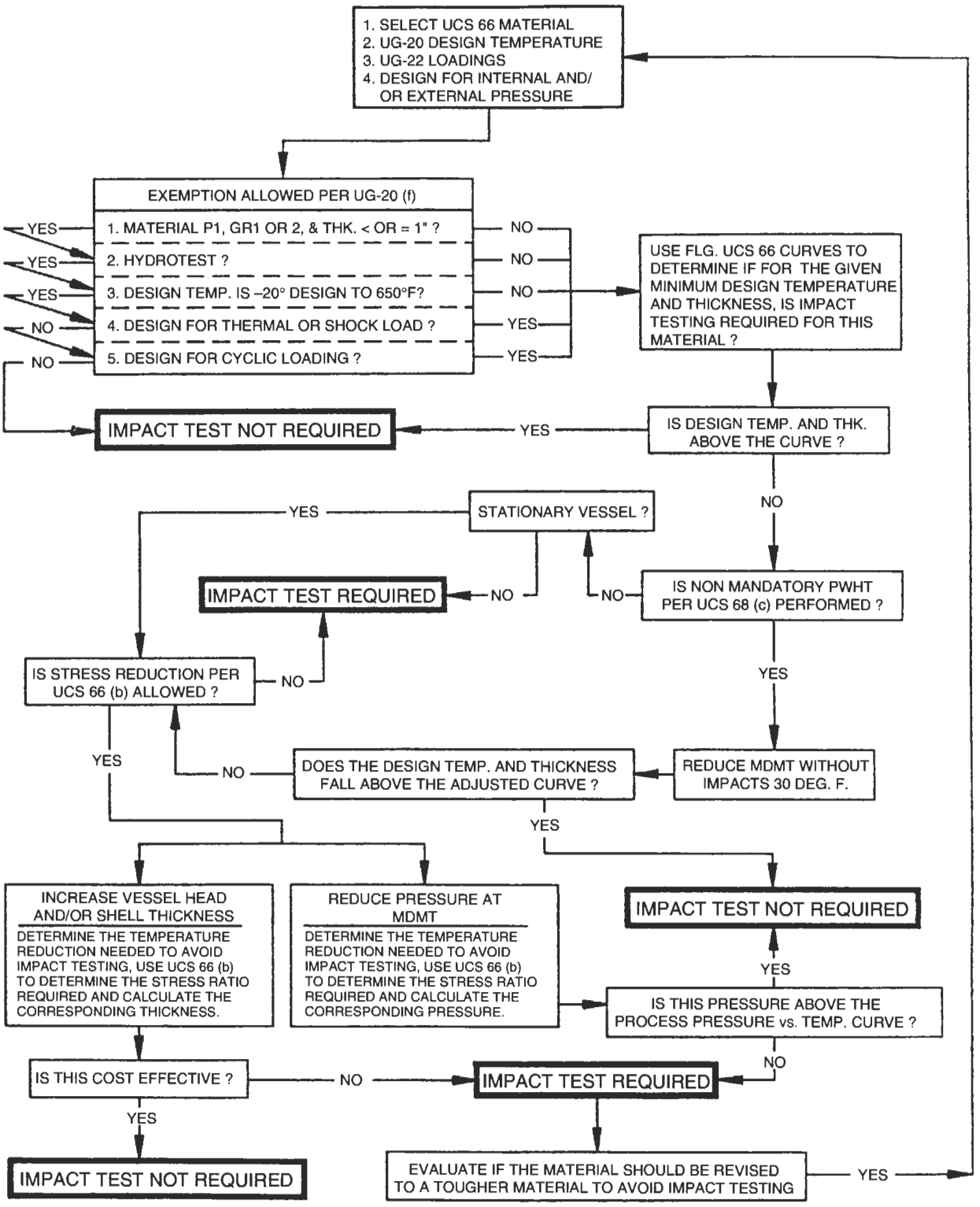

Figure 2-56. Flow chart showing decision-making process to determine MDMT and impact-testing requirements.

PROCEDURE 2-18

BUCKLING OF THIN-WALLED CYLINDRICAL SHELLS

This procedure is to determine the maximum allowable stress for tubular members that are subject to axial compression loadings. Tubular members may be a pressure vessel, a pipe, a silo, a stack, or any axially loaded cylinder of any kind. In addition, axial-loaded cylinders may be subjected to other load cases simultaneously. Other load cases include bending and internal or external pressure.

Axial loads can also result when a vertical vessel, stack, or silo is transported and erected from the horizontal position due to bending of the shell. This procedure defines critical stress and critical load and differentiates between long, short, and intermediate columns.

For ASME Code vessels; the allowable compressive stress is Factor "B." The ASME Code, factor "B," considers radius and length but does not consider length unless external pressure is involved. This procedure illustrates other methods of defining critical stress and the allowable buckling stress for vessels during transport and erection as well as equipment not designed to the ASME Code. For example, shell compressive stresses are developed in tall silos and bins due to the "side wall friction" of the contents on the bin wall.

Shell buckling is a subtopic of nonlinear shell theory. In cylinders, buckling is a phenomenon that occurs when the cylinder fails in compression substantially before the ultimate compressive strength is reached. It is a function of the geometry of the item and is affected by imperfections in shape. A short, thick-walled column fails by yield due to pure compression. A long, thin-walled column fails by buckling. There is an intermediate region between the two. But in intermediate and long cylinders the mode of failure is very different.

The term *buckling* refers to an unstable state. The force causing the instability is called the *critical* force. The stress that causes buckling failure is always less than that required for a direct compressive failure.

The terms *buckling* and *collapse* are often used interchangeably. *Buckling* is defined as localized failure caused by overstress or instability of the wall under compressive loading. *Collapse* is a general failure of the entire cross section by flattening due to external pressure.

Cylinders can buckle or collapse due to circumferential loadings as well. This procedure does not analyze cylinders for buckling due to circumferential loadings. There is a critical uniform circumferential loading as well as a longitudinal one, as discussed in this procedure.

There are two kinds of failure due to buckling. The first, *general* buckling, involves bending of the axis of the cylinder, resulting in instability. This is the type addressed by Euler and designed for by a "slenderness ratio" method.

The other type of buckling is a result of local instability that may or may not result in a change in the axis of the cylinder. This type is known as *local* buckling, and the stability against local buckling is dependent on t/R ratios.

For short and intermediate cylinders the critical stress is independent of length. For long cylinders the length of the cylinder is a key factor. The range of cylinders whose slenderness ratios are less than Euler's critical value are called *short* or *intermediate* columns.

There are three kinds of buckling: elastic, inelastic, and plastic. This procedure is concerned with elastic buckling only. AISC assumes that the upper limit of elastic buckling is defined by an average stress equal to one-half the yield point.

Critical Length, Critical Load, Critical Stress

The critical length is the length at which the critical stress is achieved.

The critical stress is the stress from the critical load.

Any shell longer than its critical length is considered of "infinite" length because the additional length does not contribute to stiffness.

Effects of Internal or External Pressure

The longitudinal pressure stresses either add or subtract from the axial compressive stresses. Internal pressure stresses are in the opposite direction of axial compression and therefore are subtracted. External pressure stresses add to the axial compression stresses since they are in the same direction.

In addition, the hoop stresses resulting from external pressure reduce the ability of the cylinder to resist the overall axial load. The uniform circumferential compressive forces from external pressure aid in the buckling process. The critical load is higher for a cylinder subjected to an axial load alone than for a cylinder subjected to the same overall load but a portion of which is a result of external pressure. This is because of the circumferential component of the external pressure. By the same token, internal pressure aids in a cylinder's ability to resist compressive axial loading, for the same reasons. The longitudinal stress induced by the internal pressure is in the opposite direction of weight and any axial compressive loads.

Table 2-13
Comparison of "Local Buckling" Stress Equations

Reference	Formula, σ_{cr}	Example σ_{cr}, psi	Example F_b, psi	Parameters for Example in Table 2-13
Michielson (1948) (1)	$0.194E\left(\frac{t}{R_o}\right)$	15,789	5263	$t = 0.25$ in.
Kirste (1954) (1)	$0.187E\left(\frac{t}{R_o}\right)$	15,219	5073	$E = 29.5 \times 10^6$ psi
Kempner (1954) (1)	$0.182E\left(\frac{t}{R_o}\right)$	14,812	4938	$R_o = 90$ in.
Pogorelov (1967) (1)	$0.160E\left(\frac{t}{R_o}\right)$	13,022	4341	$D_o = 180$ in.
Alcoa (1950) (1)	$34{,}700 - 1150\sqrt{\frac{R_o}{t}}$	12,880	4293	$F_y = 36$ KSI
CBI	$\frac{10^6 t}{R_o}\left[2 - 0.666\left(100\frac{t}{R_o}\right)\right]$	NA	5041	$L = 90$ ft
Timoshenko (1936) (1)	$0.6E\left(\frac{t}{R_o}\right)$	48,833	16,278	$I = \pi R_m^2 t = 570.173$ in.^{4}
AISI (Plantema) (1)(2)	$\frac{662t}{D_o} + 0.399F_y$	14,365	4788	$A = 2\pi R_m t = 141.18$ in.^{2}
Baker (3)	$\frac{0.6\gamma Et}{D_o}$ $\gamma = 0.33$	8112	4056	$r = \sqrt{\frac{I}{A}} = 63.55$ in.
Wilson-Newmark (1933) (4)	$\frac{8000t}{D_o}$ or $\frac{1.5(10^6)t}{R_o}$	11,110 or 9870	6580	$A = \frac{(0.125t)}{90} = \frac{[0.125(0.25)]}{90} = 0.000347$
Marks Handbook (Donnell 1934)	$\frac{t}{D} > 0.00425\,E\left[\frac{\left[0.6\left(\frac{t}{R_o}\right) - (1\times10^{-7})\left(\frac{R}{t}\right)\right]}{1+0.004\left(\frac{E}{F_y}\right)}\right]$	NA	NA	B = From Fig. CS-2 = 5000 psi
	$\frac{t}{D} \le 0.00425$ $\frac{0.56tE}{D\left(1+\frac{0.004E}{F_y}\right)}$	NA	5737	$\frac{t}{D_o} = \frac{0.25}{180} = 0.00139$
Fluor (3)	$F_y < 30$ KSI $\frac{(0.6tE)}{D\left(1+\frac{0.004E}{F_y}\right)}$	NA	5738	$\frac{D_o}{t} = \frac{180}{0.25} = 720$
	$F_y > 30$ KSI $3558\left(\frac{t}{D}\right)$ KSI	NA	4945	$\frac{t}{R_o} = \frac{0.25}{90} = 0.00278$
ASME Factor "B" (3)	$A = \frac{0.125t}{R_o}$ B = from applicable curve	NA	5000	$\frac{R_o}{t} = \frac{90}{0.25} = 360$
Von Karmen–Tsien (1941)	$0.195E\left(\frac{t}{R_o}\right)$	15,979	5326	$\frac{L}{D_o} = \frac{1080}{180} = 6$
AWWA D-100	$\frac{L}{R} < 25$ $17.5(10^5)\left(\frac{t}{R_o}\right)\left[1+50.000\left(\frac{t}{R_o}\right)^2\right]$	NA	6744	$\frac{L}{R_o} = 12$
				$\frac{R_o}{L} = 0.0833$
				$\frac{L}{r} = \frac{1080}{63.55} = 17$

Notes for Table 2-13:

1. Uses a 3:1 safety factor.
2. Equation valid for values as follows:

$$\frac{3300}{F_y} < \frac{D_o}{t} < \frac{13{,}000}{F_y}$$

3. Uses a 2:1 safety factor.
4. Uses a 1.5:1 safety factor.

One can imagine a thin-walled cylinder loaded axially to the maximum extent possible. An inward circumferential load does not add any force longitudinally to the cylinder; however, it increases the risk of buckling.

Safety Factor

The allowable buckling stress is the "critical buckling stress" multiplied by some factor of safety. The safety factor for buckling ranges from 1.5:1 to 3:1. In addition, certain upper boundaries are specified, such as one-half the yield strength.

Stiffening Rings

Stiffening rings, either internal or external, should be spaced at between 1 and 4 diameters. For vessels with stiffening rings, the length of the cylinder is determined by the distance between the stiffening rings. This presupposes that the stiffening rings are of adequate size and stiffness to resist the forces imposed on them. The design of the stiffening rings is not a part of this procedure.

ALLOWABLE BUCKLING STRESS IN CYLINDRICAL SHELLS [14–20]

Data

A = metal cross-sectional area, in.^{2}
B = ASME Code allowable stress, psi
C = end connection coefficient, use 1.0 for simply supported and 2.0 for cantilevered
C_c = max allowable slenderness ration per AWWA D-100
D_o = OD of cylinder, in.
E = modulus of elasticity, psi
e = tolerance for peaking, in.
FS = factor of safety
F_y = minimum specified yield strength, psi
F_b = allowable longitudinal compressive stress, psi
I = moment in inertia, in.^{4}
L_c = length at which critical stress is achieved, in.
l = tolerance for banding, in.
M = longitudinal bending moment, in.-lb
P_c = critical external pressure buckling load, psi
P_{cr} = critical buckling load, lb
P_i = internal pressure, psi
P_x = external pressure, psi
R_o = vessel outside radius, in.
r = radius of gyration, in.
T_c = factor for transition between elastic and inelastic buckling point per AWWA D-100
t = wall thickness, in.
W = weight of vessel above plane of consideration, lb
σ_x = longitudinal stress, psi
σ_{cr} = critical stress, psi

Allowable Stress, F_b

$$F_b < \frac{\sigma_{cr}}{FS} < \frac{F_y}{2} < 10\,\text{ksi}$$

For ASME Code vessels, F_b = Factor "B"

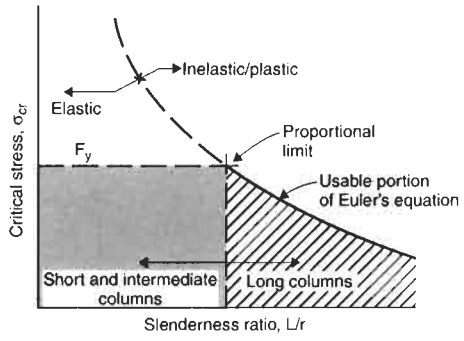

Figure 2-57. Graph showing comparison of column types with critical stress.

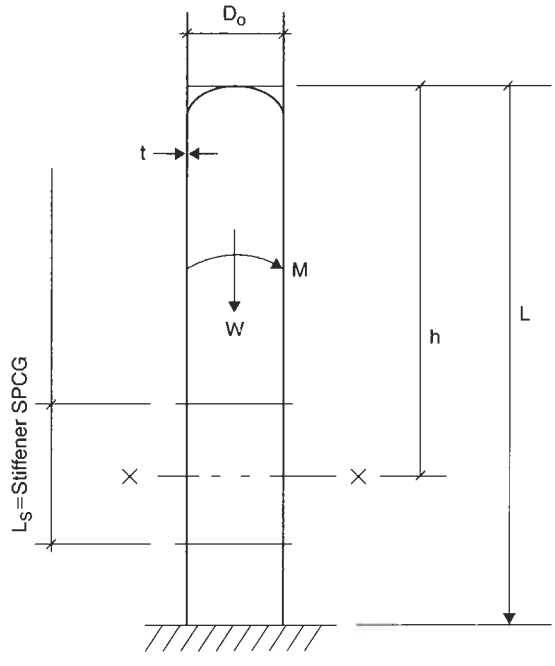

- *Maximum longitudinal compressive stress, σ_b.* With external pressure.

$$\sigma_b = \frac{-W}{\pi D_o t} - \frac{4M}{\pi D_o^2 t} - \frac{P_x D_o}{4t}$$

With internal pressure.

$$\sigma_b = \frac{-W}{\pi D_o t} - \frac{4M}{\pi R_o^2 t} + \frac{P_i D_o}{4t}$$

- *Radius of gyration, r.*

$$r = \sqrt{\frac{I}{A}} = \sqrt{\frac{D_o^2 + D_i^2}{4}}$$

Factor of Safety

F.S. = 1.5–3.0

Tolerances per AWWA D-100

$e = 0.04\sqrt{R_o t}$ max

$l = 4 \cdot \sqrt{R_o t}$ max

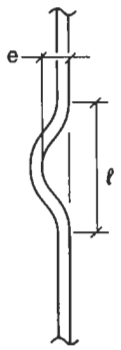

Table 2-14
Formulas for Cylinders

Short Cylinder	Intermediate Cylinder	Long Cylinder
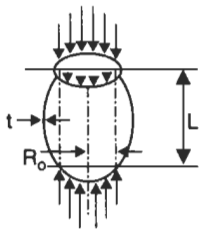 Determination of Attribute $\frac{L}{R_o} < 1.72\sqrt{\frac{t}{R_o}}$	$L_c = 1.1D_o\sqrt{\frac{D_o}{t}}$ $L < L_c$ $1.72\sqrt{\frac{t}{R_o}} < \frac{L}{R_o} < 2.38\sqrt{\frac{R_o}{t}}$ 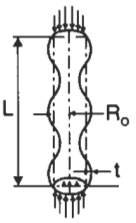	$L_c = 1.1D_o\sqrt{\frac{D_o}{t}}$ $L > L_c$ $\frac{L}{R_o} > 2.38\sqrt{\frac{R_o}{t}}$ 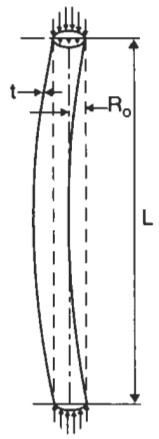
Critical External Pressure, P_c $P_c = \frac{F_y}{2}\left(\frac{D_o}{t}\right)$ Critical Axial Stress, σ_{cr} $\sigma_{cr} = F_y$ Critical Buckling Load, P_{cr} $P_{cr} = \sigma_{cr}A$	$P_c = \frac{2.6E\left(\frac{t}{D_o}\right)^{2.5}}{\frac{L}{D_o}}$ $\sigma_{cr} = 0.6E\left(\frac{t}{R_o}\right) < F_y$ $P_{cr} = \sigma_{cr}A$	$P_c = 2.2E\left(\frac{t}{D_o}\right)^3$ $\sigma_{cr} = 0.5C\pi^2E\left(\frac{R_o}{L}\right)^2$ $P_{cr} = \sigma_{cr}A$

Table 2-15
Formulas for F_b from AWWA D-100 Requirements

	Group 1 Materials	Group 2 Materials
T_c	0.0031088	0.0035372
C_c	138	126
Elastic buckling $0 < t/R_o < T_c$	$F_b = 17.5(10^5)(t/R_o)[(1 + 50{,}000(t/R_o)^2] = \text{psi}$	$F_b = 17.5(10^5)(t/R_o)[1 + 50{,}000(t/R_o)^2] = \text{psi}$
Inelastic buckling $T_c < t/R_o < 0.0125$	$F_b = [5775 + 738(10^3)(t/R_o)] = \text{psi}$	$F_b = [6925 + 886(10^3)(t/R_o)] = \text{psi}$
Plastic buckling $t/R_o > 0.0125$	$F_b = 15{,}000$ psi	$F_b = 18{,}000$ psi

Group 1 materials: A131 Gr A & B; A283 Gr B, C, and D; A573 Gr 58.
Group 2 materials: A36.

PROCEDURE 2-19

OPTIMUM VESSEL PROPORTIONS [21–25]

This procedure specifically addresses drums but can be made applicable to any kind of vessel. The basic question is: What vessel proportions, usually expressed as L/D ratio, will give the lowest weight for a given volume? The maximum volume for the least surface area, and weight, is of course a sphere. Unfortunately, spheres are generally more expensive to build. Thus, spheres are not the most economical option until you get to very large volumes and for some process applications where that shape is required.

For vessels without pressure, atmospheric storage vessels, for example, the optimum L/D ratio is 1, again using the criteria for the maximum volume for the minimum surface area. This optimum L/D ratio varies with the following parameters:

Pressure.
Allowable stress.
Corrosion allowance.
Joint efficiency.

In *Process Equipment Design*, Brownell and Young suggest that for vessels less than 2 in. in thickness, the optimum L/D ratio is 6 and for greater thicknesses is 8. However, this does not account for the parameters just shown. Others have suggested a further breakdown by pressure categories:

Pressure (PSIG)	L/D Ratio
0–250	3
250–500	4
>500	5

Although this refinement is an improvement, it still does not factor in all of the variables. But before describing the actual procedure, a brief description of the sizing of drums in general is warranted. Here are some typical types of drums:

Knock-out drums.
Accumulator drums.
Suction drums.
Liquid–vapor separators.
Liquid–liquid separators.
Storage vessels.
Surge drums.

Typically the sizing of drums is related to a process consideration such as liquid holdup (surge), storage volume, or velocity considerations for separation. Surge volume in process units relates to the response time required for the alarms and operators to respond to upstream or downstream conditions.

For small liquid holdup, vessels tend to be vertical, while for large surge volumes they tend to be horizontal. For small volumes of liquid it may be necessary to increase the L/D ratio beyond the optimum proportions to allow for adequate surge control. Thus there may be an economic L/D ratio for determining the least amount of metal for the given process conditions as well as a practical operating L/D ratio.

For liquid–vapor separators the diameter of the vessel is determined by the velocity of the product and the time it takes for the separation to occur. Baffles and demister pads can speed up the process. In addition, liquid–vapor separators must provide for minimum vapor spaces. The sizing of vessels is of course beyond this discussion and is the subject of numerous articles.

An economic L/D ratio is between 1 and 10. L/D ratios greater than 10 may produce the lowest surface-area-to-volume ratio but should be considered impractical for most applications. Obviously plot space is also a consideration in ultimate cost. In general, the higher the pressure the larger the ratio, and the lower the pressure the lower the ratio. As previously stated, the optimum L/D ratio for an atmospheric drum is 1. Average pressure vessels will range between 3 and 5.

Two procedures are included here and are called Method 1 and Method 2. The two procedures, though similar in execution, yield different results. Both methods take into account pressure, corrosion, joint efficiency, and allowable stress. Even with this much detail, it is impossible to determine exactly what proportions will yield the lowest overall cost, since there are many more variables that enter into the ultimate cost of a vessel. However, determining the lowest weight is probably the best parameter in achieving the lowest cost.

The procedure for determining the optimum L/D ratios for the two methods is as follows:

Given

V, volume
P, pressure
C, corrosion allowance
S, allowable stress
E, joint efficiency

Method 1

1. Calculate F_1.
2. From Fig. 2-58, using F1 and vessel volume, V, determine the vessel diameter, D.
3. Use D and V to calculate the required length, L.

Method 2

1. Calculate F_2.
2. From Fig. 2-59 determine L/D ratio.
3. From the L/D ratio, calculate the diameter, D.
4. Use D and V to calculate the required length, L.

Table 2-16
Optimum Vessel Proportions—Comparison of Two Methods

V (cu. ft.)	P (PSIG)	Method[1]	D (ft)	L (ft)	t (in.)	W (lb)	L/D
1500	150	1	7.5	34	0.5625	20,365	4.5
		2	8.5	23.6	0.625	20,086	2.8
	300	1	6	53	0.8125	35,703	8.8
		2	7.5	31.5	0.8125	28,668	4.2
2000	150	1	7	52	0.5	25,507	7.4
		2	9	28.4	0.625	24,980	3.2
	300	1	6.5	61	0.875	51,179	9.4
		2	8.5	32.4	1.125	39,747	3.8
3000	150	1	8.5	53	0.625	40,106	6.3
		2	10.5	31.1	0.6875	35,537	3
	300	1	7.5	68	0.9375	65,975	9.1
		2	9.5	39.2	1.25	69,717	4.1
5000	150	1	10	64	0.6875	62,513	6.4
		2	11.5	44.3	1.125	86,781	3.9
	300	1	8.5	88	1.125	107,861	10.4
		2	11.5	44.3	1.375	106,067	3.9

[1]Methods are as follows, based on graphs: Method 1: K. Abakians, *Hydrocarbon Processing*, June 1963. Method 2: S.P. Jawadekar, *Chemical Engineering*, Dec. 15, 1980.

Optimum Vessel Proportions for Vessels with (2) 2:1 S.E. Heads

Notation

V = vessel volume, cu ft
P = internal pressure, PSIG
L = length, T–T, ft
T = shell thickness, in.
W = vessel weight, lb
D = diameter, ft
C = corrosion allowance, in.
A = surface area, sq ft
F_n = vessel ratios
S = allowable stress, psi
E = joint efficiency
w = unit weight of plate, PSF
L_e = equivalent length of cylinder equal to the volume of a vessel with (2) 2:1 S.E. heads
h = height of cone, ft
R = radius, ft
C_1, K_1 = constant for ellipsoidal heads

Diameter for Different L/D Ratios

L/D	D
3	$\sqrt[3]{\frac{6V}{5\pi}}$
4	$\sqrt[3]{\frac{12V}{13\pi}}$
5	$\sqrt[3]{\frac{3V}{4\pi}}$
6	$\sqrt[3]{\frac{12V}{19\pi}}$
7	$\sqrt[3]{\frac{6V}{11\pi}}$
8	$\sqrt[3]{\frac{12V}{25\pi}}$

Equations

$$L_e = L + 0.332D$$

$$V = \frac{\pi D^3}{12} + \frac{\pi D^2 L}{4}$$

$$D = \sqrt[3]{\frac{4V}{\pi\left(0.3333 + \frac{L}{D}\right)}}$$

$$W = Aw$$

$$A = 2.18\,D^2 + \pi DL$$

$$t = \frac{PR}{SE - 0.6P} + C$$

$$L = \frac{4V}{\pi D^2} - \frac{D}{3}$$

$$F_1 = \frac{P}{CSE}$$

$$F_2 = C\left(\frac{SE}{P} - 0.6\right)$$

Atmospheric Tank Proportions

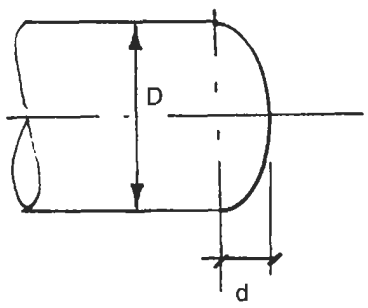

Ellipsoidal Heads

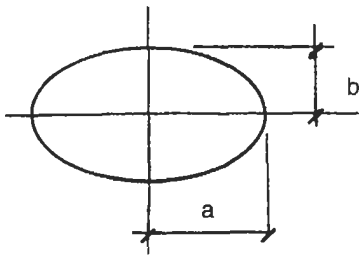

Flat Elliptical Ends

$$K_1 = \frac{2d}{R}$$

$$K_2 = \frac{b}{a}$$

$$C_1 = 2 + \frac{K_1^2}{\sqrt{1 - K_1^2}} \ln\left(\frac{1 + \sqrt{1 - K_1^2}}{1 - \sqrt{1 - K_1^2}}\right)$$

Note: For 2:1 S.E. Heads, $C_1 = 2.76$ and $K_1 = 0.5$.

Table 2-17
Optimum Tank Proportions

Case	Optimum Proportions	Volume
Cylinder with flat ends 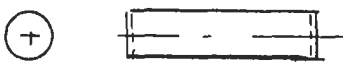	$L = D$	$2\pi R^3$
Cylinder with ellipsoidal heads 	$L = R(C_1 + 4K_1)$	$\pi R^3\left(\frac{3C_1 - 8K_1}{3}\right)$
Cylinder with internal ellipsoidal heads 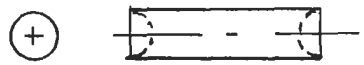	$L = R(C_1 + 4K_1)$	$\pi R^3\left(\frac{3C_1 + 8K_1}{3}\right)$
Cylinder with internal hemi-heads 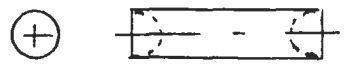	$L = 8R$	$6.66\pi R^3$
Cylinder with conical ends 	$h = 0.9R$ $L = 0.9R$	$1.5\pi R^3$
Cylinder with internal conical ends 	$h = 0.9R$ $L = 3.28R$	$2.68\pi R^3$
Elliptical tank with flat ends 	$L = 2K_2 a\sqrt{\frac{2}{1 + K_2^2}}$	$2K_2^2\pi a^3\sqrt{\frac{2}{1 + K_2^2}}$

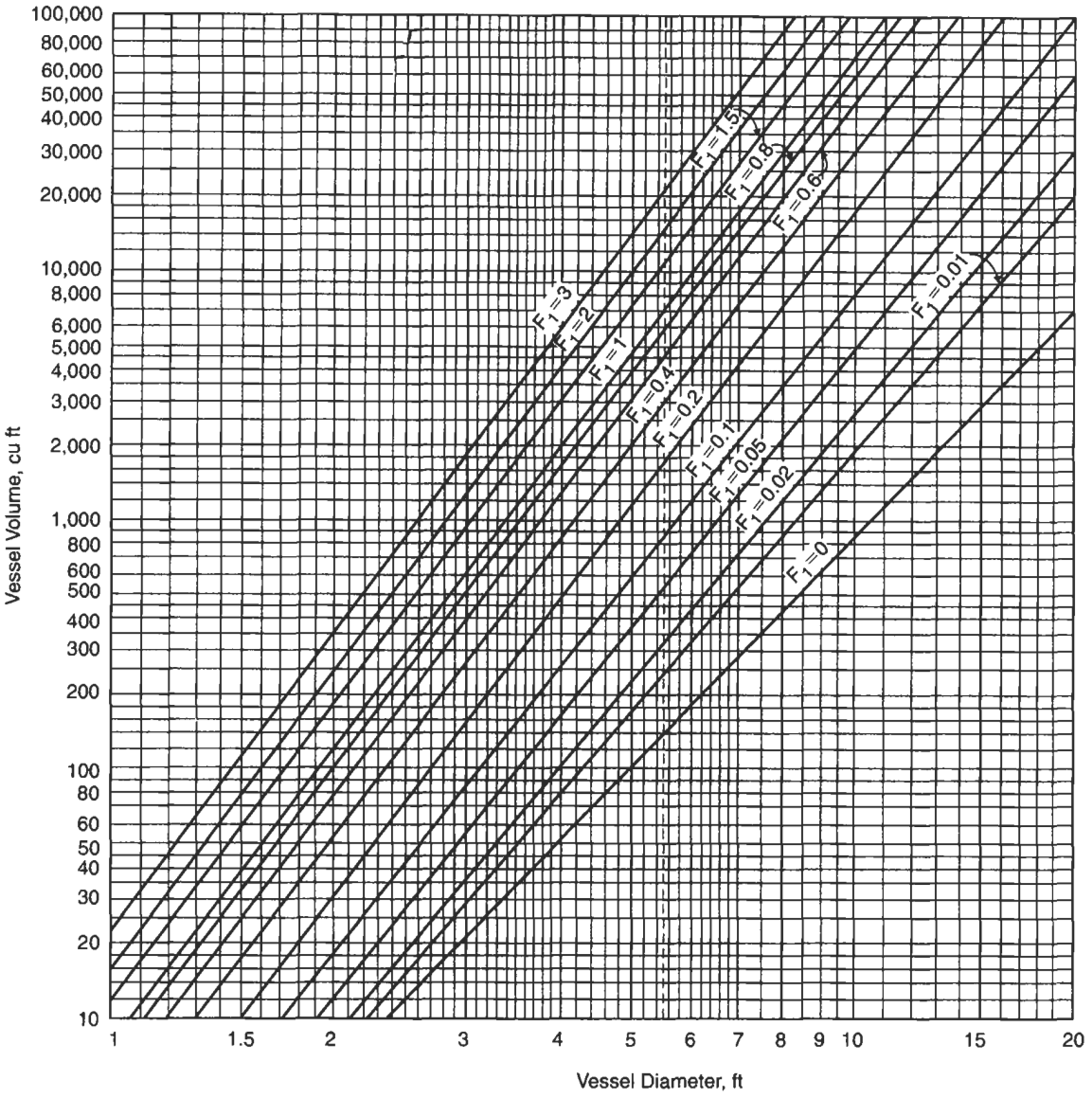

(From K. Abakians, *Hydrocarbon Processing and Petroleum Refiner*, June 1963.)

Figure 2-58. Method 1: Chart for determining optimum diameter.

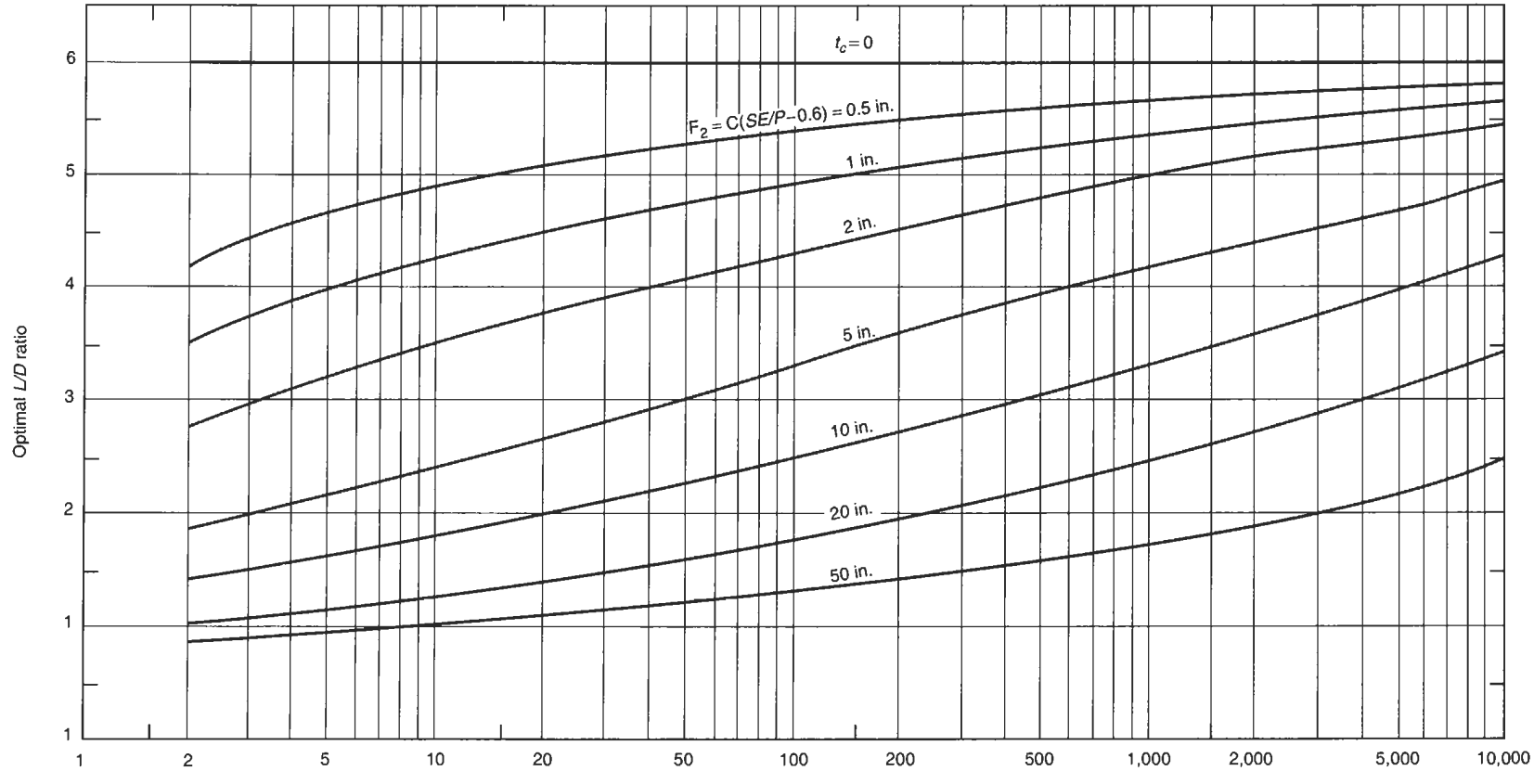

(From S.P. Jawadekar, *Chemical Engineering*, Dec. 15, 1980.)

Figure 2-59. Method 2: Chart for determining the optimum L/D ratio.

PROCEDURE 2-20

ESTIMATING WEIGHTS OF VESSELS AND VESSEL COMPONENTS

Estimating of weights of vessels is an important aspect of vessel engineering. In the conceptual phase of projects, weights are estimated in order to determine costs and budgets for equipment, foundations, erection, and transportation. Estimated weights also help to get more accurate bids from suppliers. Accurate weights are necessary for the design of the vessel itself to determine forces and moments.

There are a number of different types of weights that are calculated. Each weight is used for different purposes.

1. ***Fabricated weight***: Total weight as fabricated in the shop.
2. ***Shipping weight***: Fabrication weight plus any weight added for shipping purposes, such as shipping saddles.
3. ***Erection weight***: Fabrication weight plus any weight installed for the erection of the equipment, such as any insulation, fireproofing, piping, ladders, platforms.
4. ***Empty weight***: The overall weight of the vessel sitting on the foundation, fully dressed, waiting for operating liquid.
5. ***Operating weight***: Empty weight plus any operating liquid weight.
6. ***Test weight***: This weight can be either shop or field test weight, that is, the vessel full of water.

There are a number of ways to estimate the weights of vessels, depending on the accuracy required. Vessel weights can be estimated based on computer design programs. These programs typically calculate the volume of metal for the vessel shell and head and add weights for supports, nozzles, trays, and other components. Another fast and easy way to get the volume of metal in the shell and heads is to use the surface area in square feet and multiply this by the unit weight for the required thickness in pounds per square foot.

In addition to the base weight of metal in the shell and heads, the designer must include an allowance for plate overages per Table 2-18. The mill never rolls the plates the exact specified thickness since there would be the possibility of being below thickness. The safety margin added by the mill is referred to as *plate overage* or *overweight percentage*. The plate overage varies by the thickness of the material.

In addition to the plate overage, the fabricator (or head manufacturer) also adds a *thinning allowance* to the head to ensure that the head meets the minimum thickness in all areas. Depending on the type of head, the diameter, and the thickness required, a thinning allowance can be determined. This can be as much as 1.5 in. for large-diameter hemi-heads over 4 in. thick! The metal does not disappear during the forming process but may "flow" to the areas of most work.

On a typical spun 2:1 S.E. head, the straight flange will get thicker and the knuckle will get thinner due to cold working. The crown of the head should remain about the same. Therefore the completed head has a thickness averaging the initial thickness of the material being formed.

After the weights of all the components are added for a total weight, an additional percentage is typically added to allow for other components and welding. The typical percentages are as follows:

< 50,000 lb	Add 10%
50,000–75,000 lb	Add 8%
75,000–100,000 lb	Add 6%
> 100,000 lb	Add 5%

The weight of any individual component can easily be calculated based on the volume of the material times the unit density weight given in Table 2-18. Any shape can be determined by calculating the surface area times the thickness times the density. The designer need only remember the density of steel for most vessels of 0.2833 lb/in.^{3} to determine any weight. For vessels or components of other materials, either the density of that material or the factor for that material relative to carbon steel can be used. These values are also listed in the following tables.

Formulas for Calculating Vessel Weights

Data

D_m = mean vessel diameter, in.
L = vessel length, tangent to tangent, in.
T = vessel thickness, in.
A_c = area of cone, $in.^2$
d = density of material, $lb/in.^3$

		For carbon steel
1.0	Weight of shell	
	$W = \pi D_m tLd$	$= 0.89 D_m Lt$
	$wt/ft = 37.7 D_m tL$	$= 10.68 D_m t$
2.0	Weight of heads	
	hemi $= 1.57 D_m^2 td$	$= 0.445 D_m^2 t$
	2:1 S.E. $= 1.084 D_m^2 td$	$= 0.307 D_m^2 t$
	$100\% - 6\% = 0.95 D_m^2 td$	$= 0.269 D_m^2 t$
	Cone $= A_c td$	$= 0.2833 A_c t$

Calculation of Weight of Weld Neck Flange

Data

T = thickness of flange
O = flange OD
D = bolt hole diameter
H = hub height
G = hub thickness at small end
W = width of hub
B = ID of flange
V = volume, $in.^3$
d = density of material, $lb/in.^3$
N = number of bolts/holes

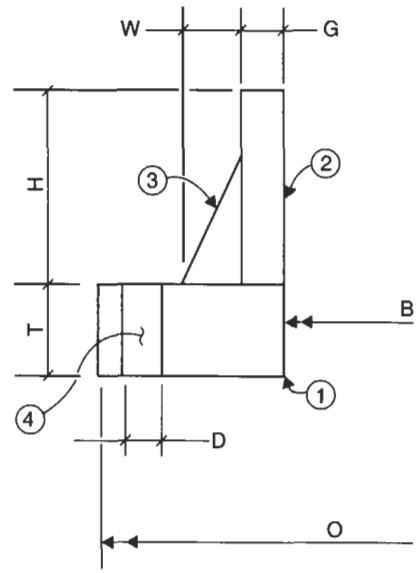

Formulas

1. $\left[\frac{O^2\pi}{4} - \frac{B^2\pi}{4}\right]T = (+)$
2. $\{B + G\}\pi GH = (+)$
3. $0.5\{(B + 2G + W)\pi WH\} = (+)$
4. $\left[\frac{D^2\pi}{4}\right]TN = (-)$
5. $V = 1 + 2 + 3 - 4 =$
6. weight $= V \times d =$

Table 2-18
Weights of Carbon Steel Plate and Stainless Steel Sheet, PSF

Thickness (in.)	Raw Weight	Weight Including % Overweight	% Overweight	Thickness (in.)	Raw Weight	Weight Including % Overweight	% Overweight
0.125	5.1	5.65	10.75	0.875	35.7	36.91	3.38
0.1875	7.66	8.34	9	0.9375	38.28	39.54	3.38
0.25	10.2	10.97	7.5	1	40.8	42.02	3
0.3125	12.76	13.61	6.75	1.0625	43.38	44.65	3
0.375	15.3	16.22	6	1.125	45.94	47.28	3
0.4375	17.86	18.79	5.25	1.25	51	52.53	3
0.5	20.4	21.32	4.5	1.375	56.15	57.78	3
0.5625	22.97	23.98	4.5	1.5	61.2	63.04	3
0.625	25.6	26.46	3.75	1.625	66.35	68.29	3
0.6875	28.07	29.1	3.75	1.75	71.4	73.54	3
0.75	30.6	31.63	3.38	1.875	76.56	78.8	3
0.8125	33.17	34.27	3.38	2	81.6	84.05	3

Stainless Steel Sheet

Thickness Gauge	Weight	Thickness Gauge	Weight
10 GA	5.91	20 GA	1.58
11 GA	5.25	24 GA	1.05
12 GA	4.59	26 GA	0.788
14 GA	3.28	28 GA	0.656
16 GA	2.63	30 GA	0.525
18 GA	2.1		

Note: % Overweight is based on standard mill tolerance added to the thickness of plate to guarantee minimum thickness.

Table 2-19
Weights of Flanges, 2 in. to 24 in. (lb)

Size (in.)	Rating					
	150	300	600	900	1500	2500
2	9	10	12	25	25	42
	4	*8*	*10*	*25*	*25*	*39*
3	14	16	20	32	48	94
	14	*16*	*20*	*32*	*48*	*86*
4	16	26	41	51	73	145
	19	*27*	*41*	*54*	*73*	*135*
6	25	45	77	110	164	380
	28	*50*	*86*	*113*	*159*	*345*
8	40	70	111	187	273	580
	48	*80*	*140*	*197*	*301*	*530*
10	56	94	180	268	454	1075
	70	*120*	*230*	*290*	*507*	*1025*
12	86	140	226	372	670	1525
	105	*184*	*295*	*413*	*775*	*1300*
14	111	190	334	562	940	
	135	*249*	*378*	*494*	*975*	
16	141	250	462	685	1250	
	176	*324*	*527*	*619*	*1300*	
18	153	305	531	924	1625	
	214	*416*	*665*	*880*	*1750*	
20	188	380	678	1164	2050	
	284	*516*	*855*	*1107*	*2225*	
24	270	540	959	2107	3325	
	398	*763*	*1175*	*2099*	*3625*	

Notes:
1. Top value in block is the weight of a weld neck flange.
2. Bottom value in block is the weight of a blind flange.

Table 2-20

Dimensions and Weights of Large-Diameter Flanges, 26 in. to 60 in., ASME B16.47, Series B

Size (in.)		Dimensions						Weight	
		O	C	Y	X	N	d	RFWN	Blind
26	150	30.94	1.62	3.5	29.64	36	0.75	120	340
	300	34.12	3.5	5.69	27.62	32	1.25	400	860
28	150	32.94	1.75	3.75	28.94	40	0.75	140	415
	300	36.25	3.5	5.88	29.75	36	1.25	450	970
30	150	34.94	1.75	3.94	31	44	0.75	150	470
	300	39	3.69	6.22	32	36	1.375	550	1250
32	150	37.06	1.81	4.25	33.06	48	0.75	170	550
	300	41.5	4.06	6.62	34	32	1.5	685	1550
34	150	39.56	1.94	4.34	35.12	40	0.875	210	660
	300	43.62	4.06	6.81	36.12	36	1.5	750	1635
36	150	41.62	2.06	4.62	37.19	44	0.875	240	780
	300	46.12	4.06	7.12	38	32	1.625	840	1835
38	150	44.25	2.12	4.88	39.12	40	1	290	905
	300	48.12	4.38	7.56	40	36	1.625	915	2150
40	150	46.25	2.19	5.06	41.31	44	1	310	1025
	300	50.12	4.56	7.81	42	40	1.625	990	2425
42	150	48.25	2.31	5.25	43.38	48	1	345	1175
	300	52.5	4.69	8.06	44	36	1.75	1135	2745
44	150	50.25	2.38	5.38	45.38	52	1	370	1310
	300	54.5	5	8.44	46.19	40	1.75	12635	3150
46	150	52.81	2.44	5.69	47.44	40	1.125	435	1490
	300	57.5	5.06	8.75	43.38	36	1.875	1470	3560
48	150	54.81	2.56	5.88	49.5	44	1.125	480	1680
	300	59.5	5.06	8.81	50.31	40	2	1575	3850
50	150	56.81	2.69	6.06	51.5	48	1.125	520	1900
	300	61.5	5.44	9.25	52.38	44	2	1710	4365
52	150	58.81	2.75	6.19	53.56	52	1.125	550	2080
	300	63.5	5.62	9.56	54.44	48	2	1840	4800
54	150	61	2.81	6.38	55.62	56	1.125	620	2290
	300	65.88	5.38	9.44	56.5	48	2	1980	4965
56	150	63	2.88	6.56	57.69	60	1.125	680	2500
	300	69.5	6.06	10.56	58.81	36	2.375	2600	6240
58	150	65.94	2.94	6.88	59.69	48	1.25	830	2800
	300	71.94	6.06	10.81	60.94	40	2.375	2770	6675
60	150	67.94	3	7.06	61.81	52	1.25	1075	3030
	300	73.94	5.94	10.69	62.94	40	2.375	2870	6930

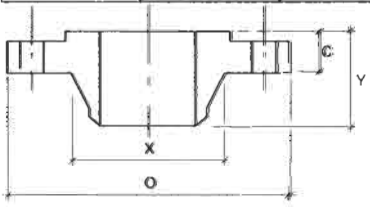

d = bolt hole diameter, in.
N = number of bolt holes

Table 2-21
Weights of Nozzles and Manways, 1 in. to 60 in.

Rating Size	150	300	600	900	1500	2500	Rating Size	150	300
1″	4	5	6	11	13	18	26″	230	490
1.5″	6	9	11	16	21	34	28″	260	550
2″	8	10	13	27	42	47	30″	280 ***1126***	665 ***2880***
3″	15	21	22	34	78	110	32″	305	805
4″	21	31	42	60	110	160	34″	345	880
6″	37	55	81	127	215	360	36″	385 ***1726***	980 ***3685***
8″	54	81	132	207	335	520	38″	440	1045
10″	72	116	215	310	650	1000	40″	465	1125
12″	107	158	261	418	940	1350	42″	510 ***2387***	1275 ***4600***
14″	132	232	407	613	950		44″	540	1365
16″	163 ***400***	289 ***705***	549 ***1260***	751 ***1610***	1175 ***3250***		46″	610	1620
18″	200 ***479***	340 ***875***	639 ***1530***	1042 ***2270***	1475 ***5200***		48″	660 ***2970***	1775 ***5515***
20″	235 ***593***	421 ***1065***	783 ***1925***	1283 ***2800***	1725 ***5430***		50″	705	1915
24″	310 ***825***	587 ***1600***	1100 ***2685***	2287 ***5455***	2650 ***9000***		52″	740	2025
							54″	800	2170
							56″	835	2790
							58″	970	2970
							60″	1050 ***5760***	3080 ***8675***

Notes:

1. Weights include pipe and WN flg.
2. Lower weight in box is weight of manway and includes nozzle, blind, and bolts.
3. Class 1500 manways are based on LWN.

Table 2-22
Weights of Valve Trays, PSF

Dia.	One Pass		Two Pass		Four Pass	
	C.S.	Alloy	C.S.	Alloy	C.S.	Alloy
<84″	13	11	14	12		
84″ to 180″	12	10	13	11	15	13
>180″	11.5	9.5	12.5	10.5	14.5	12.5

Notes:
1. Compute area on total cross-sectional area of vessel. The downcomer areas compensate for the weight of downcomers themselves.
2. Tray weights include weights of trays and downcomers.

Table 2-23
Weights of Tray Supports and Downcomer Bars (lb)

ID (in.)	C.S.	Alloy	ID (in.)	C.S.	Alloy	ID (in.)	C.S.	Alloy
30	25	17	102	113	72	174	287	174
36	28	19	108	119	75	180	294	178
42	34	23	114	123	77	186	344	207
48	37	25	120	176	108	192	354	212
54	44	35	126	183	112	198	362	218
60	47	38	132	188	116	204	374	226
66	50	40	138	195	119	210	385	231
72	53	44	144	202	122	216	396	239
78	55	46	150	244	149	222	407	245
84	99	62	156	251	152	228	418	252
90	103	65	162	271	162	234	428	259
96	109	68	168	278	167	240	440	265

Notes:
1. Tray support weights include downcomer bolting bars as well.
2. Tray support ring sizes are as follows:
   C.S.: 1/2″ × 2½″
   Alloy: 5/16″ × 2½″

Table 2-24
Thinning Allowance for Heads

Thickness	Diameter		
	<150″	>150″	Hemi-Heads
0.125″ to 1″	0.0625	None	0.188
1″ to 2″	0.125	0.25	0.375
2″ to 3″	0.25	0.25	0.625
3″ to 3.75″	0.375	0.375	0.75
3.75″ to 4″	0.5	0.5	1
over 4.25″	0.75	0.75	1.5

Table 2-25
Weights of Pipe (PLF)

Size (in.)	Schedule												
	10	20	30	STD	40	60	XS	80	100	120	140	160	XXS
0.75	0.8572			1.131	1.131		1.474	1.474				1.937	2.441
1	1.404			1.679	1.679		2.172	2.172				2.844	3.659
1.25	1.806			2.273	2.273		2.997	2.997				3.765	5.214
1.5	2.085			2.718	2.718		3.631	3.631				4.859	6.408
2	2.638			3.653	3.653		5.022	5.022				7.444	9.029
2.5	3.531			5.793	5.793		7.661	7.661				10.01	13.69
3	4.332			7.576	7.576		10.25	10.25				14.32	18.58
3.5	4.973			9.109	9.109		12.5	12.5				17.69	22.85
4	5.613			10.79	10.79	12.66	14.98	14.98		19		22.51	27.54
5	7.77			14.62	14.62		20.78	20.78		27.04		32.96	38.55
6	9.289		17.02	18.97	18.97		28.57	28.57		36.39		45.3	53.16
8	13.4	22.36	24.7	28.55	28.55	35.64	43.39	43.39	50.87	60.63	67.76	74.69	72.42
10	18.2	28.04	34.24	40.48	40.48	54.74	54.74	64.33	76.93	89.2	104.1	115.6	
12	24.2	33.38	43.77	49.56	53.52	73.16	65.42	88.51	107.2	125.5	139.7	160.3	
14	36.71	45.68	54.57	54.57	63.37	84.91	72.09	106.1	130.7	150.7	170.2	189.1	
16	42.05	52.36	62.58	62.58	82.77	107.5	82.77	136.5	164.8	192.3	223.5	245.1	
18	47.39	59.03	82.06	70.59	104.6	138.2	93.45	170.8	208	244.1	274.2	308.5	
20	52.73	78.6	104.1	78.6	122.9	166.4	104.1	208.9	256.1	296.4	341.1	379	
22	58.1			86.6			114.8						
24	63.41	94.62	140.8	94.62	171.2	238.1	125.5	296.4	367.4	429.4	483.1	541.9	
26				102.6			136.2						
28				110.7			146.8						
30	98.9	157.6	196.1	118.7			157.6						
32				126.7			168.2						
34				134.7			178.9						
36				142.7			189.6						
42				166.7			221.6						

Table 2-26
Weights of Alloy Stud Bolts + (2) Nuts Per 100 Pieces

Length (in.)	Stud Diameter, in.												
	0.5	0.625	0.75	0.875	1	1.125	1.25	1.375	1.5	1.625	1.75	1.875	2
3	29	49	76										
3.25	30	51	79										
3.5	31	53	82	120									
3.75	32	55	85	124									
4	34	57	88	128	188								
4.25	35	59	91	132	194								
4.5	36	61	94	136	199	246							
4.75	37	63	97	140	205	253							
5	39	65	100	144	210	259	330						
5.25	40	67	103	148	216	266	338						
5.5	41	69	106	152	221	272	347						
5.75		71	109	156	227	279	355						
6		73	112	160	232	285	363	460	568	700			
6.25			115	164	238	292	371	470	580	714			
6.5			118	168	243	298	380	480	592	728			
6.75				172	249	305	388	490	604	742			
7				176	254	311	396	500	616	756	900	1062	1227
7.25					260	318	404	510	628	770	916	1080	1248
7.5					265	324	413	520	640	784	932	1098	1270
7.75					271	331	421	530	652	798	948	1116	1291
8					276	337	429	540	664	812	964	1134	1312
8.25						344	437	550	676	826	980	1152	1334
8.5						350	446	560	688	840	996	1170	1355
8.75						357	454	570	700	854	1012	1188	1376
9						363	462	580	712	868	1028	1206	1398
9.25						370	470	590	724	882	1044	1224	1419
9.5						376	479	600	736	896	1060	1242	1440
9.75						383	487	610	748	910	1076	1260	1462
10						389	495	620	760	924	1092	1278	1483
10.25								630	772	938	1108	1296	1508
10.5								640	784	952	1124	1314	1526
10.75								650	796	966	1140	1332	1547
11								660	808	980	1156	1350	1569
11.25								670	820	994	1172	1368	1590
11.5								680	832	1008	1188	1385	1611
11.75								690	844	1022	1204	1404	1633
12								700	856	1036	1220	1422	1654
Add per additional 1/4" length	1.5	2	3	4	5.5	6.5	8.5	10	12	14	16	18	21.5

Table 2-27
Weights of Saddles and Baseplates (lb)

ID (in.)	Two CS Saddles	1/2 × 6 Baseplate	3/4 × 8 Baseplate	ID (in.)	Two CS Saddles	1/2 × 6 Baseplate	3/4 × 8 Baseplate
24	100	70	150	138	3060	390	790
30	150	90	190	144	3400	410	820
36	260	105	215	150	3700	430	855
42	330	125	250	156	4000	450	885
48	380	140	285	162	4250	460	920
54	440	160	320	168	4500	480	950
60	510	170	350	174	4750	490	985
66	590	190	385	180	5000	510	1020
72	680	200	420	186	5250	530	1050
78	910	220	450	192	5500	540	1080
84	1050	240	485	198	5750	560	1120
90	1160	260	520	204	6000	580	1150
96	1230	280	550	210	6250	590	1190
102	1730	290	585	216	6500	610	1220
108	1870	310	615	222	6750	630	1250
114	2330	330	650	228	7000	650	1290
120	2440	340	690	238	7250	660	1320
126	2700	360	720	240	7500	680	1360
132	2880	380	755				

Table 2-28
Density of Various Materials

Material	d (lb/in.^{3})	PCF	Weight Relative to C.S.
Steel	0.2833	490	1.00
300 SST	0.286	494	1.02
400 SST	0.283	489	0.99
Nickel 200	0.321	555	1.13
Permanickel 300	0.316	546	1.12
Monel 400	0.319	551	1.13
Monel 500	0.306	529	1.08
Inconel 600	0.304	525	1.07
Inconel 625	0.305	527	1.08
Incoloy 800	0.287	496	1.01
Incoloy 825	0.294	508	1.04
Hastelloy C4	0.312	539	1.10
Hastelloy G30	0.297	513	1.05
Aluminum	0.098	165	0.35
Brass	0.297	513	1.05
Cast iron	0.258	446	0.91
Ductile iron	0.278	480	0.98
Copper	0.322	556	1.14
Bronze	0.319	552	1.13

Ladder and Platform (L&P) Estimating

The following is a listing of average breakdowns, both cost and weight, for ladders and platforms (L&Ps) for refinery-type projects. Note that L&Ps include pipe supports, guides, and davits as well as ladders and platforms. Because this data is "average," it is meant to be averaged over an entire project and not to find the cost or weight of any individual item or vessel.

1. **Estimated Price Breakdown**:

• Platforms		30 PSF @ $2.50/lb	= $75/sq ft
• Ladders:	Caged	24 lb/ft @ $3.00/lb	= $72/ft
	Uncaged	10 lb/ft @ $2.35/lb	= $23/ft
• Misc.		$2.50/lb	
• Handrail:	Straight	$32/ft	
	Circular	$42/ft	

2. **Estimated Weight Breakdown** (as a breakdown of the total quantity):

Item		Percentage (%)	Cost ($/lb)
Platforms:	Circular	30–35%	$2.50
	Rectangular	50–55%	$2.00
Ladders:	Caged	7–9%	$3.00
	Uncaged	2–3%	$2.25
Misc.		5–10%	$2.50
Total		100%	

3. **Average Cost of L&Ps** (assuming 100 tons):

Item	Weight (tons)	Cost ($1000)	% (cost)
Platf Circ	31	155	34
Platf Rect	51	204	45
Ladder Caged	8	48	11
Ladder (uncaged)	2.5	11.25	2
Misc.	7.5	37.5	8
	100 T	$455.75	100%

Average $/lb = 455.75/100 × 2 = $2.28/lb

4. **Average % Detailed Weight Breakdown for Trayed Columns:**

Item	Large	Medium
Ladders	13.1%	9.3%
Framing	33.3	44.2
Grating	25.3	23.5
Handrailing	18.2	9.7
Pipe supports	3.0	1.6
Bolting	2.5	2.5
Davits	4.1	7.4
Misc.	0.5	1.8
	100%	100%

5. If no estimate of L&Ps is available, an ROM weight estimate can be determined by taking 5% of the overall vessel weights for the project as a total L&P weight. A percentage breakdown may be made of this overall value as noted.

Notes:

1. Miscellaneous weights:

a. Concrete	144 PCF
b. Water	62.4 PCF
c. Gunnite	125 PCF
d. Refractory	65–135 PCF
e. Calcium silicate insulation	13.8 PCF

2. Estimate weight of liquid holdup in random packed columns as 13% of volume.

3. Weights of demister pads and support grids is as follows:

Type	Density (PCF)
931	5
326	7.2
431	9
421	10.8 (multipiece)
	12 (single piece)
Grid	3 PSF

4. Estimate weights of platforming as follows:

Type	Weight
Circular platform	30 PSF
Rectangular platform	20 PSF
Ladder with cage	24 PLF
Ladder without cage	10 PLF

5. Weight of anchor chairs per anchor bolt (wt each, lb):

Anchor Bolt Dia (in.)	Weight (lb)
1	11
1.25	12
1.50	15
1.75	20
2.0	38
2.25	48
2.5	63

REFERENCES

1. ASME Boiler and Pressure Vessel Code, Section VIII, Division 1, 1995 Edition, American Society of Mechanical Engineers.
2. Harvey, J. F., *Theory and Design of Modern Pressure Vessels*, 2nd Edition, Van Nostrand Reinhold Co., 1974.
3. Bednar, H. H., *Pressure Vessel Design Handbook*, Van Nostrand Reinhold Co., 1981.
4. *Modern Flange Design*, 7th Edition, Bulletin 502, Taylor Forge International, Inc.
5. Brownell, L. E., and Young, E. H., *Process Equipment Design*, John Wiley and Sons, Inc., 1959, Section 6.2, pp. 157–159.
6. Watts, G. W., and Lang, H. A., "The Stresses in a Pressure Vessel with a Flat Head Closure," ASME Paper No. 51-A-146, 1951.
7. Burgreen, D., *Design Methods for Power Plant Structures*, C. P. Press, 1975.
8. Blodgett, O. W., *Design of Welded Structures*, J. F Lincoln Arc Welding Foundation, 1966, Section 5.3.
9. *Manual of Steel Construction*, 8th Edition, American Institute of Steel Construction, Inc., 1980.
10. ASME Boiler and Pressure Vessel Code, Section VIII, Division 2, 1995 Edition, American Society of Mechanical Engineers.
11. Radzinovsky, E. I., "Bolt Design for Repeated Loading," *Machine Design* (November 1952), pp. 135ff.
12. Meyer, G., and Strelow, D., "Simple Diagrams Aid in Analyzing Forces in Bolted Joints," *Assembly Engineering* (January 1972), pp. 28–33.
13. Horsch, R., "Solve Complicated Force Problems with Simple Diagrams," *Assembly Engineering* (December 1972), pp. 22-24.
14. Levinson, I. S., *Statics and Strength of Materials*, Prentice Hall, Inc., 1971, Chapter 16.
15. Troitsky, M. S., *Tubular Steel Structures, Theory and Design*, 2nd Edition, James F. Lincoln Arc Welding Foundation, 1990, Chapter 2.
16. Dambski, J. W., "Interaction Analysis of Cylindrical Vessels for External Pressure and Imposed Loads," ASME Technical Paper 80-C2/PVP-2, American Society of Mechanical Engineers, 1990.
17. Harvey, J. F., *Theory and Design of Pressure Vessels*, Van Nostrand Reinhold Co., 1985, Chapter 8.
18. AWWA D-100-96, *Welded Steel Tanks for Water Storage*, American Water Works Association, 6666 W. Quincy Ave, Denver, CO 80235, Section 4.0.
19. Jawad, M. H., and Farr, J. R., *Structural analysis and Design of Process Equipment*, 2nd Edition, John Wiley and Sons, 1989, Chapter 5.3.

20. Bednar, H. H., *Pressure Vessel Handbook*, 2nd Edition, Van Nostrand Reinhold Co., 1986, pp. 48–55.
21. Kerns, G. D., "New charts speed drum sizing," *Petroleum Refiner*, July 1960.
22. Jawadekar, S. P., "Consider corrosion in L/D calculation," *Chemical Engineering*, December 15, 1980.
23. Abakians, K., "Nomographs give optimum vessel size," *Hydrocarbon Processing and Petroleum Refiner*, June 1963.
24. Gerunda, A., "How to size liquid–vapor separators," *Chemical Engineering*, May 4, 1981.
25. Brownell, L. E., and Young, E. H., *Process Equipment Design*, John Wiley & Sons, Inc., 1959, Chapter 5.

3
Design of Vessel Supports

SUPPORT STRUCTURES

There are various methods that are used in the support structures of pressure vessels, as outlined below.

- *Skirt Supports*
  1. Cylindrical
  2. Conical
  3. Pedestal
  4. Shear ring
- *Leg Supports*
  1. Braced
     a. Cross braced (pinned and unpinned)
     b. Sway braced
  2. Unbraced
  3. Stub columns
- *Saddle Supports*
- *Lug Supports*
- *Ring Supports*
- *Combination Supports*
  1. Lugs and legs
  2. Rings and legs
  3. Skirt and legs
  4. Skirt and ring girder

Skirt Supports

One of the most common methods of supporting vertical pressure vessels is by means of a rolled cylindrical or conical shell called a skirt. The skirt can be either lap-, fillet-, or butt-welded directly to the vessel. This method of support is attractive from the designer's standpoint because it minimizes the local stresses at the point of attachment, and the direct load is uniformly distributed over the entire circumference. The use of conical skirts is more expensive from a fabrication standpoint, and unnecessary for most design situations.

The critical line in the skirt support is the weld attaching the vessel to the skirt. This weld, in addition to transmitting the overall weight and overturning moments, must also resist the thermal and bending stresses due to the temperature drop in the skirt. The thinner the skirt, the better it is able to adjust to temperature variations. A "hot box" design is used for elevated temperatures to minimize discontinuity stresses at the juncture by maintaining a uniform temperature in the region. In addition, skirts for elevated temperature design will normally be insulated inside and outside for several feet below the point of attachment.

There are various methods of making the attachment weld of the skirt to the shell. The preferred method is the one in which the center line of the shell and skirt coincide. This method will minimize stresses at the juncture. Probably the most common method, however, is to make the OD of the skirt match the OD of the shell. Other methods of attachment include lap-welding, pedestal type, or a shear ring arrangement. The joint efficiency of the attachment weld also varies by the method of attachment and is usually the governing factor in determining the skirt thickness. This weld may be subject to cracking in severe cyclic service.

Because the skirt is an attachment to the pressure vessel, the selection of material is not governed by the ASME Code. Any material selected, however, should be compatible with the vessel material in terms of weldability. Strength for design is also not specified for support material by the ASME Code. Usually, in the absence of any other standard, the rules of the *AISC Steel Construction Manual* will be utilized. For elevated temperature design, the top three feet of skirt at the attachment point should be of the same material as the shell.

The governing conditions for determining the thickness of the skirt are as follows:

1. Vessel erection
2. Imposed loads from anchor chairs
3. Skirt openings
4. Weight + overturning moment

Leg Supports

A wide variety of vessels, bins, tanks, and hoppers may be supported on legs. The designs can vary from small vessels supported on 3 or 4 legs, to very large vessels and spheres up to 80 feet in diameter, supported on 16 or 20 legs. Sometimes the legs are also called columns or posts.

Almost any number of legs can be used, but the most common variations are 3, 4, 6, 8, 12, 16, or 20. Legs should be equally spaced around the circumference.

Leg supports may be braced or unbraced. Braced legs are those which are reinforced with either cross-bracing or sway-bracing. Sway braces are the diagonal members which transfer the horizontal loads, but unlike cross braces, they operate in tension only. The diagonal members in a sway-braced system are called tie rods, which transfer the load to each adjacent panel. Turnbuckles may be used for adjustments of the tie rods.

Cross braces, on the other hand, are tension and compression members. Cross braces can be pinned at the center or unpinned, and transfer their loads to the legs via wing plates or can be welded directly to the legs.

Bracing is used to reduce the number or size of legs required by eliminating bending in the legs. The bracing will take the horizontal loads, thus reducing the size of the legs to those determined by compression or buckling. The additional fabrication costs of bracing may not warrant the savings in the size of the legs, however. Bracing may also cause some additional difficulties with the routing of any piping connected to nozzles on the bottom of the vessel.

Legs may be made out of pipe, channels, angles, rectangular tubing, or structural sections such as beams or columns. Legs may be welded directly to the vessel shell or head or may be bolted or welded to clips which are directly attached to the shell. It is preferable if the centroid of the leg coincides with the center line of the vessel shell to minimize the eccentric action. However, this may be more expensive from a welding and fit up viewpoint due to the coping and contouring necessary to accomplish this.

Very large vessels and tanks may require a circumferential box girder, compression ring, or ring girder at or near the attachment point of the legs to distribute the large localized loads induced by the columns and bracing. These localized stresses at the attachment point should be analyzed for the eccentric action of the legs, overturning moments, torsion of the ring, as well as the loads from any bracing.

Whereas skirt-supported vessels are more common in refinery service, leg-supported vessels are more common in the chemical industry. This may be due in part to the ventilation benefits and the toxicity of the stored or processed chemicals. Legs should not be used to support vessels in high-vibration, shock, or cyclic service due to the high localized stresses at the attachments.

Legs are anchored to the foundations by base plates, which are held in place by anchor bolts embedded in the concrete. For large vessels in high seismic areas, a shear bar may be welded to the underside of the base plate which, in turn, fits into a corresponding recessed groove in the concrete.

Saddle Supports

Usually, horizontal pressure vessels and tanks are supported on two vertical cradles called saddles. The use of more than two saddles is unnecessary and should be avoided. Using more than two saddles is normally a stress-related issue, which can be solved in a more conventional manner. The reason for not using more than two saddles is that it creates an indeterminate structure, both theoretically and practically. With two saddles, there is a high tolerance for soil settlement with no change in shell stresses or loading. Even where soil settlement is not an issue, it is difficult to ensure that the load is uniformly distributed. Obviously there are ways to accomplish this, but the additional expense is often unwarranted. Vessels 40–50 ft in diameter and 150 ft long have been supported on two saddles.

As with all other types of supports, the ASME Code does not have specific design procedures for the design of saddles or the induced stresses in the vessel. While the ASME Code does have allowable maximum stresses for the stresses in the vessel shell, the code does not specifically address the support components themselves. Typically, the allowable stresses utilized are those as outlined in the *AISC Steel Construction Manual.*

A methodology for the determination of the stresses in the shell and heads of a horizontal vessel supported on saddles was first published in 1951 by L. P. Zick. This effort was a continuation of others' work, started as early as the 1930s. This procedure has been used, with certain refinements since that time, and is often called Zick's analysis, or the stresses are referred to as Zick's stresses.

Zick's analysis is based on the assumption that the supports are rigid and are not connected to the vessel shell. In reality, most vessels have flexible supports which are attached to the vessel, usually by welding. Whatever the reason, and there are a myriad of them, Zick's assumptions may yield an analysis that is not 100% accurate. These results should, however, be viewed more in terms of the performance they have demonstrated in the past 45 years, than in the exact analytical numbers they produce. As a strategy, the procedure is successful when utilized properly. There are other issues that also would have an effect on the outcome of the numerical answers such as the relative rigidity of the saddle—from infinitely rigid to flexible. The answers should be viewed in light of the assumptions as well as the necessity for 5-digit accuracy.

The saddle itself has various parts: the web, base plate, ribs, and wear plate. The web can be on the center line of the saddle or offset. The design may have outer ribs only or inner ribs only, but usually it has both. For designs in seismic areas, the ribs perform the function of absorbing the longitudinal, horizontal loads. The saddle itself is normally bolted to a foundation via anchor bolts. The ASME Code does specify the minimum included arc angle (contact angle)

of 120°. The maximum efficient saddle angle is 180°, since the weight and saddle splitting force go to zero above the belt line. In effect, taking into account the 6° allowed for reduction of stresses at the horn for wear plates, the maximum angle becomes 168°.

Saddles may be steel or concrete. They may be bolted, welded, or loose. For the loose type, some form of liner should be used between the vessel and the saddle. The typical loose saddle is the concrete type. Usually one end of the vessel is anchored and the other end sliding. The sliding end may have bronze, oiled, or Teflon slide plates to reduce the friction caused by the thermal expansion or contraction of the vessel.

Longitudinal location of the saddles also has a large effect on the magnitude of the stresses in the vessel shell as well as a bearing on the design of the saddle parts themselves. For large diameter, thin-walled vessels, the saddles are best placed within 0.5R of the tangent line to take advantage of the stiffening effect of the heads. Other vessels are best supported where the longitudinal bending at the midspan is approximately equal to the longitudinal bending at the saddles. However, the maximum distance is 0.2 L.

Lugs and Ring Supports

Lugs

Lugs offer one of the least expensive and most direct ways of supporting pressure vessels. They can readily absorb diametral expansion by sliding over greased or bronzed plates, are easily attached to the vessel by minimum amounts of welding, and are easily leveled in the field.

Since lugs are eccentric supports they induce compressive, tensile, and shear forces in the shell wall. The forces from the eccentric moments may cause high localized stresses that are combined with stresses from internal or external pressure. In thin-walled vessels, these high local loads have been known to physically deform the vessel wall considerably. Such deformations can cause angular rotation of the lugs, which in turn can cause angular rotations of the supporting steel.

Two or four lug systems are normally used; however, more may be used if the situation warrants it. There is a wide variety of types of lugs, and each one will cause different stress distributions in the shell. Either one or two gussets can be used, with or without a compression plate. If a compression plate is used, it should be designed to be stiff enough to transmit the load uniformly along the shell. The base plate of the lug can be attached to the shell wall or unattached. Reinforcing pads can be used to reduce the shell stresses. In some cases, the shell course to which the lugs are attached can be made thicker to reduce the local stress.

There are two solutions presented here for analyzing the shell stresses caused by the eccentric lug action. Method 1 was developed by Wolosewick in the 1930s as part of the penstock analysis for the Hoover Dam Project. This method utilizes "strain-energy" concepts to analyze the shell as a thin ring. Thus, this method is frequently called "ring analysis." Ring analysis looks at all the loadings imposed on the artificial ring section and the influence that each load exerts on the other.

Method 2 utilizes the local load analysis developed by Bijlaard in the 1950s, which was further refined and described in the *WRC Bulletin 107*. This procedure uses the principles of flexible load surfaces. This procedure is more accurate, but more mathematically rigorous as well.

When making decisions regarding the design of lugs, a certain sequence of options should be followed. The following represents a ranking of these options based on the cost to fabricate the equipment:

1. 2 lugs, single gusset
2. 2 lugs, double gussets
3. 2 lugs with compression plate
4. Add reinforcing pads under (2) lugs
5. Increase size of (2) lugs
6. 4 lugs, single gusset
7. 4 lugs, double gussets
8. 4 lugs with compression plates
9. Add reinforcing pads under (4) lugs
10. Increase size of (4) lugs
11. Add ring supports

Ring Supports

In reality, ring supports are used when the local stresses at the lugs become excessively high. As can be seen from the previous list, the option to go to complete, 360-degree stiffening rings would, in most cases, be the most expensive option. Typically, vessels supported by rings or lugs are contained within a structure rather than supported at grade and as such would be subject to the seismic movement of which they are a part.

Vessels supported on rings should only be considered for lower or intermediate temperatures, say below 400 or 500 degrees. Using ring supports at higher temperatures could cause extremely large discontinuity stresses in the shell immediately adjacent to the ring due to the differences in expansion between the ring and the shell. For elevated temperature design, rings may still be used, but should not be directly attached to the shell wall. A totally loose ring system can be fabricated and held in place with shear bars. With this

system there is no interaction between the shell and the support rings.

The analysis for the design of the rings and the stresses induced in the shell employs the same principles as Lug Method 1, ring analysis. The eccentric load points are translated into radial loads in the rings by the gussets. The composite ring section comprised of the shell and ring is then analyzed for the various loads.

PROCEDURE 3-1

WIND DESIGN PER ASCE [1]

Notation

A_f = projected area, sq ft
C_f = force coefficient, shape factor 0.7 to 0.9
D_e = vessel effective diameter, from Table 3-4
f = fundamental natural frequency, 1/T, cycles per second, Hz
F = design wind force, lb
g = 3.5 for vessels
G = gust effect factor, Cat A and B = 0.8, Cat C and D = 0.85
G_f = gust response factor for flexible vessels
h = height of vessel, ft
I = importance factor, see Table 3-1
I_z = the intensity of turbulence at height z
K_z = velocity pressure exposure coefficient from Table 3-3a, dimensionless
K_{zT} = topographic factor, use 1.0 unless vessel is located near or on isolated hills. See ASCE for specific requirements
M = overturning moment at base, ft-lb
N_i, N_h, N_b, N_d = calculation factors
Q = background response
q_z = velocity pressure at height z above the ground, PSF
$= 0.00256\, K_z K_{zT} V^2 I$
R = resonant response factor
R_n, R_h, R_d = calculation factors
T = period of vibration, sec
V = basic wind speed from map, Figure 3-1, mph
V_{ref} = basic wind speed converted to ft/sec
V_z = mean hourly wind speed at height z, ft/sec
z = equivalent height of vessel, ft
z_{min} = minimum design height, ft, from Table 3-3
β = structure, damping coefficient, 1% of critical damping

rock or pile foundation:	0.005
compacted soil:	0.01
vessel in structure or soft soils:	0.015

$\alpha, b, c, l, \epsilon$ = coefficients, factors, ratios from Table 3-3

The ASME Code does not give specific procedures for designing vessels for wind. However, Para. UG-22, "Loadings," does list wind as one of the loadings that must be considered. In addition, local, state, or other governmental jurisdictions will require some form of analysis to account for wind loadings. Client specifications and standards also frequently require consideration of wind. There are two main, nationally recognized standards that are most frequently used for wind design. They are:

1. ASCE 7-95 (formerly ANSI A58.1)
2. Uniform Building Code (UBC)

This section outlines the wind design procedures for both of these standards. Wind design is used to determine the forces and moments at each elevation to check if the calculated shell thicknesses are adequate. The overturning moment at the base is used to determine all of the anchorage and support details. These details include the number and size of anchor bolts, thickness of skirt, size of legs, and thickness of base plates.

As a loading, wind differs from seismic in that it is more or less constant; whereas, seismic is of relatively short duration. In addition, the wind pressure varies with the height of the vessel. A vessel must be designed for the worst case of wind or seismic, but need not be designed for both simultaneously. While typically the worst case for seismic design is with the vessel full (maximum weight), the worst design case for wind is with the vessel empty. This will produce the maximum uplift due to the minimum restraining weight.

The wind forces are obtained by multiplying the projected area of each element, within each height zone by the basic wind pressure for that height zone and by the shape factor for that element. The total force on the vessel is the sum of the forces on all of the elements. The forces are applied at the centroid of the projected area.

Tall towers or columns should be checked for dynamic response. If the vessel is above the critical line in Figure 3-9, Rm/t ratio is above 200 or the h/D ratio is above 15, then dynamic stability (elastic instability) should be investigated. See Procedure 4-8, "Vibration of Tall Towers and Stacks," for additional information.

Design Procedure

Step 1: Give or determine the following:

Structure category = _____
Exposure category = _____
Wind velocity, V = _____
Effective diameter, D = _____
Shape factor, C_f = _____
Importance factor, I = _____
Damping coefficient, β = _____
Fundamental frequency, f = _____

Step 2: Calculate h/D ratio: _____

Step 3: Determine if vessel is rigid or flexible.

a. If h/D < 4, T < 1 sec, or f > 1 Hz, then vessel is considered rigid and:

$$F = q_Z G C_f A_f$$

b. If h/D > 4, T > 1 sec, or f < 1 Hz, then vessel is considered flexible and:

$$F = q_Z G_f C_f A_f$$

Step 4: Calculate shear and moments at each elevation by multiplying force, F, and elevation, h_x, the distance to the center of the projected area.

Step 5: Sum the forces and moments at each elevation down to the base.

Determination of Gust Factor, G_f, for Vessels Where h/D > 4 or T > 1 Second

Given:

D_e = _____ (effective diameter)
h = _____ (overall height)
V = _____ (basic wind speed)
β = _____ (structural damping coefficient)
f = _____ (fundamental natural frequency)
g = 3.5

Determine the following values from Table 3-3:

α = _____ l = _____
b = _____ ϵ = _____
c_c = _____ Z_{min} = _____

Calculate:

$$Z = 0.6h$$

$$I_Z = c\left(\frac{33}{Z}\right)^{1/6} =$$

$$L_Z = l\left(\frac{Z}{33}\right)^{\epsilon} =$$

$$Q^2 = \frac{1}{1 + 0.63\left(\frac{D_e + h}{L_z}\right)^{0.63}} =$$

$$V_{ref} = 1.467\,V =$$

$$V_Z = b\left(\frac{Z}{33}\right)^{\alpha}(V_{ref}) =$$

$$N_i = \frac{fL_z}{V_Z} =$$

$$N_h = \frac{4.6fh}{V_Z}$$

$$N_b = \frac{4.6\,fD_e}{V_Z} =$$

$$N_d = \frac{15.4fD_e}{V_Z} =$$

$$R_n = \frac{7.465N_i}{(1 + 10.302N_i)^{5/3}} =$$

$$R_h = \frac{1}{N_h} - \frac{1}{2N_h^2}(1 - e^{-2N_h}) =$$

$$R_b = \frac{1}{N_b} - \frac{1}{2N_b^2}(1 - e^{-2N_b}) =$$

$$R_d = \frac{1}{N_d} - \frac{1}{2N_d^2}(1 - e^{-2N_d}) =$$

$$R^2 = \frac{R_n R_h R_b(0.53 + 0.47R_d)}{\beta} =$$

$$G_f = \frac{1 + 2gI_Z\sqrt{Q^2 + R^2}}{1 + 7I_z}$$

Sample Problem

Vertical vessel on skirt:

Structure category	= III
Exposure category	= C
Basic wind speed, V	= 90 mph
Importance factor, I	= 1.15
Equivalent diameter, D_e	= 7 ft
Overall height, h	= 200 ft
Empty weight, W	= 100^k
Damping coefficient, β	= 0.01
Natural frequency, f	= 0.57 Hz

Values from Table 3-3:

$\alpha = \frac{1}{1.65} = 0.1538$
$b = 0.65$
$c = 0.20$

Calculate:

$$Z = 0.6h = 0.6(200) = 120\,\text{ft} > Z_{min}$$

$$I_Z = c\left(\frac{33}{Z}\right)^{\frac{1}{6}} = 0.2\left(\frac{33}{120}\right)^{0.167} = 0.161$$

$$L_Z = l\left(\frac{Z}{33}\right)^{\epsilon} = 500\left(\frac{120}{33}\right)^{0.2} = 647\,\text{ft}$$

$$Q^2 = \frac{1}{1+0.63\left(\frac{D_e+h}{L_z}\right)^{0.63}} = \frac{1}{1+0.63\left(\frac{7+200}{647}\right)^{0.63}} = 0.765$$

$$V_{ref} = 1.467V = 1.467(90) = 132\,\text{ft/sec}$$

$$V_Z = b\left(\frac{Z}{33}\right)^{\alpha}(V_{ref}) = 0.65\left(\frac{120}{33}\right)^{0.1538}(132) = 104.6\,\text{ft/sec}$$

$$N_1 = \frac{fL_z}{V_z} = \frac{0.57(647)}{104.6} = 3.53$$

$$N_h = \frac{4.6fh}{V_Z} = \frac{4.6(0.57)200}{104.6} = 5.01$$

$$N_b = \frac{4.6fD_e}{V_Z} = \frac{4.6(0.57)7}{104.6} = 0.175$$

$$N_d = \frac{15.4fD_e}{V_Z} = \frac{15.4(0.57)7}{104.6} = 0.587$$

$$R_n = \frac{7.465N_1}{(1+10.302N_1)^{5/3}} = \frac{7.465(3.53)}{[1+10.302(3.53)]^{1.66}} = 0.065$$

$$R_h = \frac{1}{N_h} - \frac{1}{2N_h^2}(1-e^{-2N_h}) = \frac{1}{5.01} - \frac{1}{2(5.01^2)}[1-e^{-10.02}] = 0.179$$

$$R_b = \frac{1}{N_b} - \frac{1}{2N_b^2}(1-e^{-2N_b}) = \frac{1}{0.175} - \frac{1}{2(0.175^2)}[1-e^{-0.35}] = 0.893$$

$$R_d = \frac{1}{N_d} - \frac{1}{2N_d^2}(1-e^{-2N_d}) = \frac{1}{0.587} - \frac{1}{2(0.587^2)}[1-e^{-1.174}] = 0.701$$

$$R^2 = \frac{R_n R_h R_b(0.53+0.47R_d)}{\beta} = \frac{0.065(0.179)0.893(0.53+0.47(0.701))}{0.01} = 0.893$$

$$G_f = \frac{1+2gI_Z\sqrt{Q^2+R^2}}{1+7I_Z} = \frac{1+2(3.5)0.161\sqrt{0.765+0.893}}{1+7(0.161)} = 1.15$$

$$F = q_Z G_f C_f A_f = 23.846K_Z(1.15)0.9A_f = 24.68A_f K_Z$$

where $q_Z = 0.00256K_Z IV^2 = 23.846K_Z$

Determine Wind Force on Vessel

Elevation	q_z	G_f	C_f	h_z	A_f	F	M
190–200 ft	34.7 psf	1.15	0.90	10 ft	70 ft^2	2514 # @ 195 ft	490,230
170–190 ft	34.0 psf	1.15	0.90	20 ft	140 ft^2	4927 # @ 180 ft	886,860
150–170 ft	33.1 psf	1.15	0.90	20 ft	140 ft^2	4796 # @ 160 ft	767,360
130–150 ft	32.4 psf	1.15	0.90	20 ft	140 ft^2	4695 # @ 140 ft	657,300
110–130 ft	31.2 psf	1.15	0.90	20 ft	140 ft^2	4521 # @ 120 ft	542,520
95–110 ft	30.0 psf	1.15	0.90	15 ft	105 ft^2	3260 # @ 103 ft	335,780
85–95 ft	29.5 psf	1.15	0.90	10 ft	70 ft^2	2137 # @ 90 ft	192,330
75–85ft	28.8 psf	1.15	0.90	10 ft	70 ft^2	2087 # @ 80 ft	166,960
65–75 ft	27.8 psf	1.15	0.90	10 ft	70 ft^2	2014 # @ 70 ft	140,980
55–65 ft	26.9 psf	1.15	0.90	10 ft	70 ft^2	1949 # @ 60 ft	116,940
45–55 ft	25.9 psf	1.15	0.90	10 ft	70 ft^2	1876 # @ 50 ft	93,800
35–45 ft	24.8 psf	1.15	0.90	10 ft	70 ft^2	1797 # @ 40 ft	71,880
27.5–35 ft	23.3 psf	1.15	0.90	7.5 ft	53 ft^2	1278 # @ 32 ft	40,900
22.5–27.5 ft	22.4 psf	1.15	0.90	5 ft	35 ft^2	811 # @ 25 ft	20,275
17.5–22.5 ft	21.4 psf	1.15	0.90	5 ft	35 ft^2	775 # @ 20 ft	15,500
0–17.5 ft	20.2 psf	1.15	0.90	17.5 ft	123 ft^2	2571 # @ 9 ft	23,140
					Σ	39,494 lb	4,562,755 ft–lb

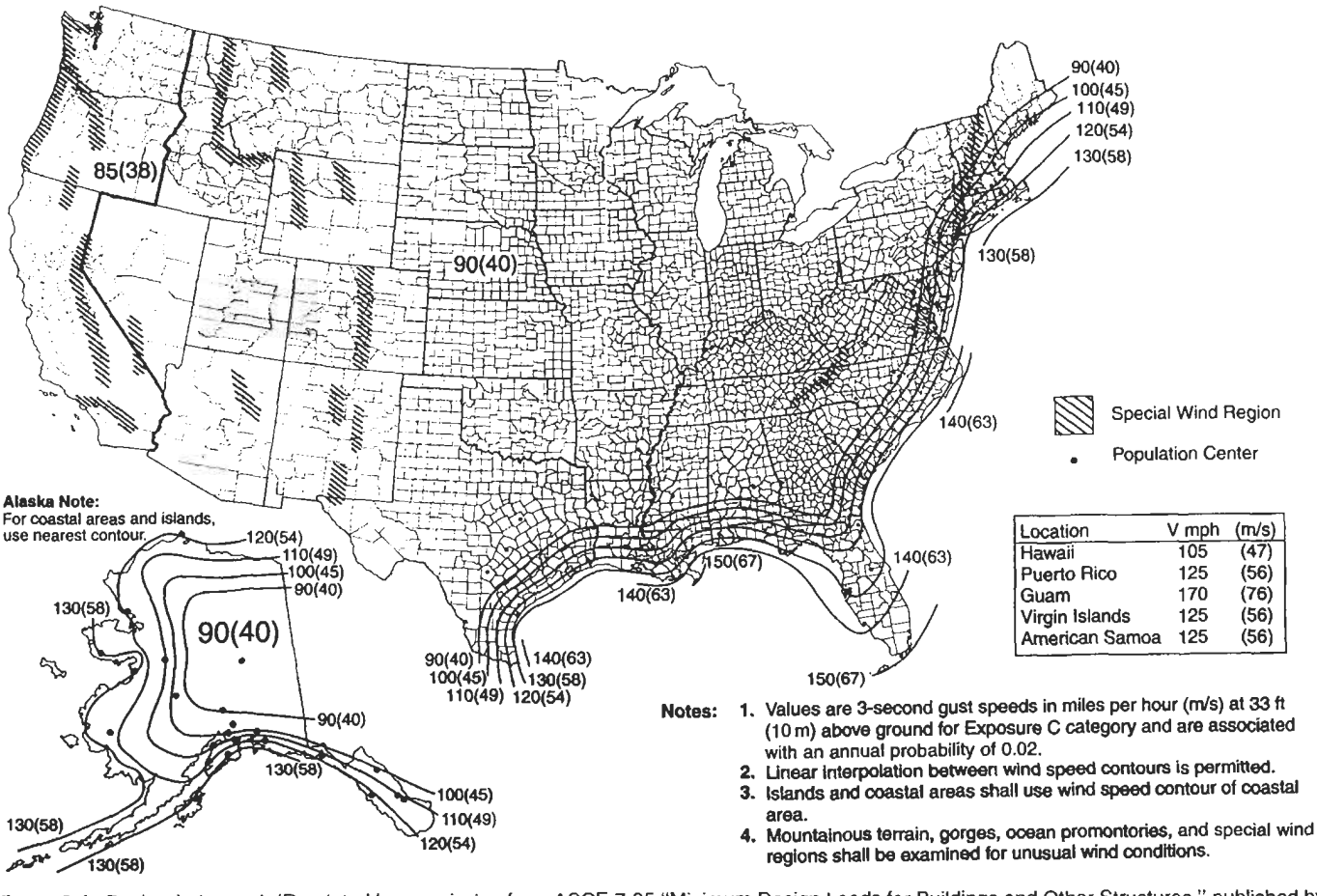

Figure 3-1. Basic wind speed. (Reprinted by permission from ASCE 7-95 "Minimum Design Loads for Buildings and Other Structures," published by ASCE, 1995.)

Table 3-1*
Importance Factor (Wind Loads)

Structure Category	I
I	0.87
II	1.00
III	1.15
IV	1.15

Table 3-2
Structure Categories

Buildings and structures that represent a low hazard to human life in the event of failure	Category I
All buildings not covered by the other 3 categories	Category II
Buildings and other structures containing sufficient quantities of toxic or explosive substances to be dangerous to the public if released...REFINERIES	Category III
Buildings or structures where the primary occupancy is one in which more than 300 people congregate in one area	Category III
Schools, non-emergency health care facilities, jails, non-essential power stations	Category III
Essential facilities	Category IV

Exposure Categories

The following ground roughness exposure categories are considered and defined in ASCE 7-95 Section 6.5.3.1:

- *Exposure A:* Centers of large cities.
- *Exposure B:* Urban and suburban areas, towns, city outskirts, wooded areas, or other terrain with numerous closely spaced obstructions having the size of single family dwellings or larger.
- *Exposure C:* Open terrain with scattered obstructions having heights generally less than 30 ft (9.1 m).
- *Exposure D:* Flat, unobstructed coastal areas directly exposed to wind blowing over open water; applicable for structures within distance from shoreline of 1500 ft or 10 times the structure height.

Table 3-3*
Miscellaneous Coefficients

Exp	α	b	c	l(ft)	ϵ	$^*Z_{min}$(ft)
A	1/3.0	0.30	0.45	180	1/2.0	60
B	1/4.0	0.45	0.30	320	1/3.0	30
C	1/6.5	0.65	0.20	500	1/5.0	15
D	1/9.0	0.80	0.15	650	1/8.0	7

*Z_{min} = minimum height used to ensure that the equivalent height $\bar{z}$ is the greater of 0.6h or Z_{min}.

Table 3-3a*
Velocity Pressure Exposure Coefficients, K_z

Height above ground level, z		Exposure Categories			
ft	(m)	A	B	C	D
0–15	(0–4.6)	0.32	0.57	0.85	1.03
20	(6.1)	0.36	0.62	0.90	1.08
25	(7.6)	0.39	0.66	0.94	1.12
30	(9.1)	0.42	0.70	0.98	1.16
40	(12.2)	0.47	0.76	1.04	1.22
50	(15.2)	0.52	0.81	1.09	1.27
60	(18.0)	0.55	0.85	1.13	1.31
70	(21.3)	0.59	0.89	1.17	1.34
80	(24.4)	0.62	0.93	1.21	1.38
90	(27.4)	0.65	0.96	1.24	1.40
100	(30.5)	0.68	0.99	1.26	1.43
120	(36.6)	0.73	1.04	1.31	1.48
140	(42.7)	0.78	1.09	1.36	1.52
160	(48.8)	0.82	1.13	1.39	1.55
180	(54.9)	0.86	1.17	1.43	1.58
200	(61.0)	0.90	1.20	1.46	1.61
250	(76.2)	0.98	1.28	1.53	1.68
300	(91.4)	1.05	1.35	1.59	1.73
350	(106.7)	1.12	1.41	1.64	1.78
400	(121.9)	1.18	1.47	1.69	1.82
450	(137.2)	1.24	1.52	1.73	1.86
500	(152.4)	1.29	1.56	1.77	1.89

Note: Linear interpolation for intermediate values of height z is acceptable.

Table 3-4
Effective Diameter, D_e*

D (Vessel Diameter + 2 × Insulation Thickness)	Piping with or Without Ladders	Attached Piping, Ladders, and Platforms
≤ 4 ft – 0 in.	$D_e = 1.6D$	$D_e = 2.0D$
4 ft – 0 in. – 8 ft – 0 in.	$D_e = 1.4D$	$D_e = 1.6D$
> 8 ft – 0 in.	$D_e = 1.2D$	$D_e = 1.4D$

*Suggested only; not from ASCE.

Notes

1. The "structure category" per Table 3-2 is equivalent to ASCE 7-95's "building category." Most vessels will be Category III.
2. The basic wind speed on the map, Figure 3-1, corresponds to a 3-sec. gust speed at 33 ft above the ground, in Exposure Category C with an annual probability of 0.02 (50-year mean recurrence interval).
3. The constant, 0.00256, reflects the mass density of air for the standard atmosphere (59°F at sea level pressure, 29.92 in. of mercury). The basic equation

*Reprinted by permission from ASCE 7-95, "Minimum Design Loads for Buildings and Other Structures," published by ASCE, 1995.

is ½ mv where m = mass of air, 0.0765 PCF, and v is the acceleration due to gravity, 32.2 ft/sec. The mass density of the air will vary as function of altitude, latitude, temperature, weather, or season. This constant may be varied to suit the actual conditions if they are known with certainty. See ASCE 7-95.

4. Short, vertical vessels, vessels in structures, or horizontal vessels where the height is divided between two pressure zones may be more conveniently designed by applying the higher pressure uniformly over the entire vessel.
5. Vessels that qualify as "flexible" may or may not be required to be checked for dynamic response. This could include a dynamic analysis, which is a check of elastic instability, or a vibration analysis for vibration amplification due to vortex shedding. See procedure 4-8 "Vibration of Tall Towers and Stacks," for additional information.
6. Deflection due to wind should be limited to 6 in. per 100 ft of elevation.
7. AISC allows a 33% increase in the allowable stress for support components due to wind loading.

Application of Wind Forces

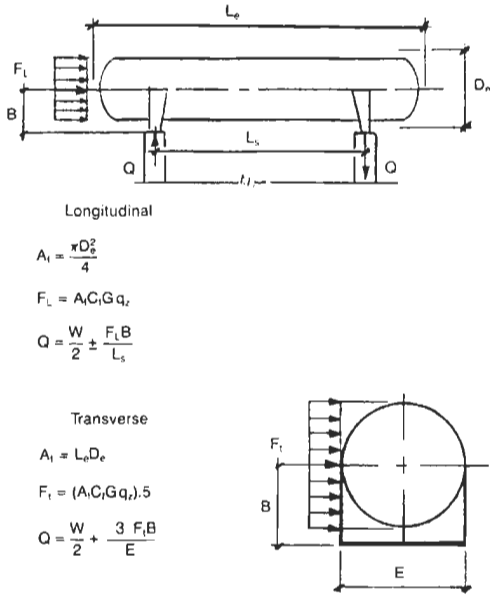

Figure 3-3. Horizontal vessels.

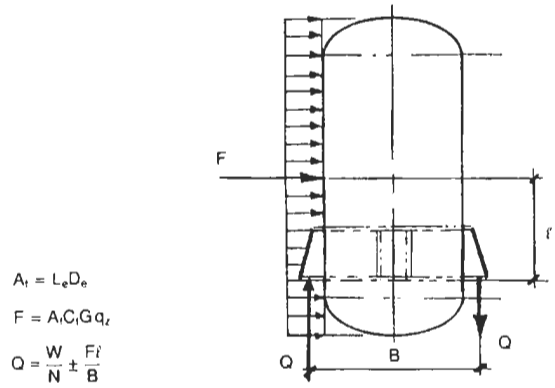

Figure 3-4. Vessels on lugs or rings.

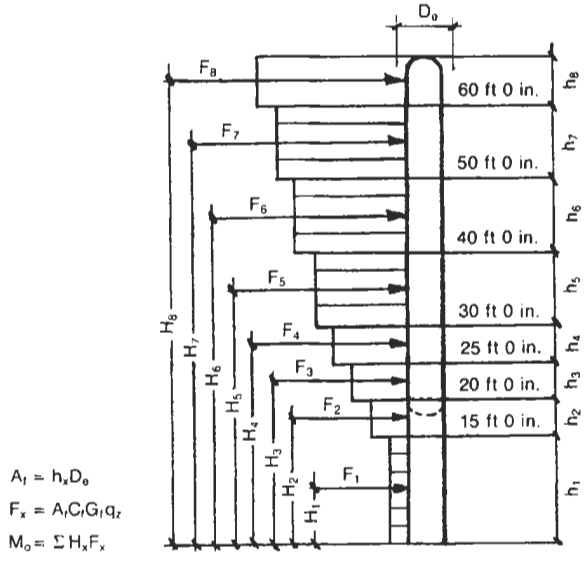

Figure 3-2. Vertical vessels.

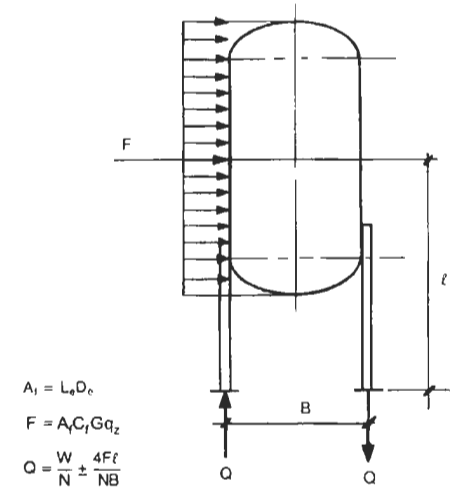

Figure 3-5. Vessels on legs.

PROCEDURE 3-2

WIND DESIGN PER UBC–97

Notation

P = design wind pressure, PSF
C_e = combined height, exposure, and gust factor. See Table 3-6.
C_q = pressure coefficient. See Table 3-7. Use 0.8 for most vessels
q_s = wind stagnation pressure. See Table 3-5.
I = importance factor, 1.15 for most vessels. See Table 3-8.

Table 3-5*
Wind Stagnation Pressure (q_s) at Standard Height of 33 ft

Basic wind speed (mph)[1]	70	80	90	100	110	120	130
Pressure q_s (psf)	12.6	16.4	20.8	25.6	31.0	36.9	43.3

[1]Wind speed from Figure 3-6.
Source: UBC.

Table 3-6*
Combined Height, Exposure, and Gust Factor Coefficient (C_e)[1]

Height Above Average Level of Adjoining Ground (feet)	Exposure D	Exposure C	Exposure B
0–15	1.39	1.06	0.62
20	1.45	1.13	0.67
25	1.50	1.19	0.72
30	1.54	1.23	0.76
40	1.62	1.31	0.84
60	1.73	1.43	0.95
80	1.81	1.53	1.04
100	1.88	1.61	1.13
120	1.93	1.67	1.20
160	2.02	1.79	1.31
200	2.10	1.87	1.42
300	2.23	2.05	1.63
400	2.34	2.19	1.80

[1]Values for intermediate heights above 15 ft may be interpolated.
Source: UBC.

This procedure is for the wind design of vessels and their supports in accordance with the Uniform Building Code (UBC). This procedure to the UBC is basically the same as that outlined in the previous procedure for ASCE 7-95. There is a difference in the terminology used and the values of the tables, but the process is identical. In addition, UBC, Section 1615, states that "structures sensitive to dynamic effects, such as buildings with a height-to-width ratio greater than five, structures sensitive to wind-excited oscillations, such as vortex shedding or icing, and buildings over 400 feet in height, shall be, and any structure may be, designed in accordance with approved national standards." This paragraph indicates that any vessel with an h/D ratio greater than 5 should follow some national standard to account for these added effects. ASCE 7-95 is such a recognized national standard and should be used for any vessel in this category. The procedure outlined herein for UBC should only be considered for vessels with h/D ratios less than 5.

Table 3-7
Pressure Coefficients (C_q)

Structure or Part Thereof	Description	C_q Factor
Chimneys, tanks, and solid towers	Square or rectangular	1.4 any direction
	Hexagonal or octagonal	1.1 any direction
	Round or elliptical	0.8 any direction
Open-frame towers	Square and rectangular	
	Diagonal	4.0
	Normal	3.6
	Triangular	3.2
Tower accessories (such as ladders, conduits, lights, and elevators)	Cylindrical members	
	2 in. or less in diameter	1.0
	Over 2 in. in diameter	0.8
	Flat or angular members	1.3

Source: UBC.

Table 3-8
Importance Factor, I

Occupancy Category	Importance Factor I Wind
I. Essential facilities	1.15
II. Hazardous facilities	1.15
III. Special occupancy structures	1.00
IV. Standard occupancy structures	1.00

Source: UBC.

Exposure Categories

Exposure B has terrain with building, forest, or surface irregularities 20 ft or more in height, covering at least 20% of the area and extending one mile or more from the site.

Exposure C has terrain which is flat and generally open, extending one-half mile or more from the site in any full quadrant.

*Reproduced from the 1997 edition of the "Uniform Building Code," copyright 1997, with permission from publisher, the International Conference of Building Officials.

Table 3-9
Design Wind Pressures for Zones

Height Zone	Values of P ~ PSF						
	70 mph	80 mph	90 mph	100 mph	110 mph	120 mph	130 mph
0–15	12.29	15.99	20.28	24.97	30.23	35.98	42.23
20	13.10	17.05	21.62	26.61	32.23	38.36	45.01
25	13.79	17.95	22.77	28.03	33.94	40.40	47.40
30	14.26	18.56	23.54	28.97	35.08	41.75	49.00
40	15.19	19.77	25.07	30.85	37.36	44.47	52.19
60	16.58	21.58	27.36	33.68	40.78	48.55	56.97
80	17.74	23.08	29.28	36.03	43.64	51.94	60.95
100	18.66	24.29	30.81	37.68	45.92	54.66	64.14
120	19.35	25.20	31.96	39.33	47.63	56.69	66.53
160	20.75	27.01	34.25	42.15	51.05	60.77	71.31
200	21.68	28.21	35.78	44.04	53.33	63.48	74.49
300	23.76	30.93	39.23	48.28	58.47	69.59	81.66

Note: Table is based on exposure category "C" and the following values:
$p = C_e C_{qs} q_s I$
where:
$C_q = 0.8$ $I = 1.15$

$q_s =$ 70 mph = 12.6 psf; 80 mph = 16.4 psf; 90 mph = 20.8 psf; 100 mph = 25.6 psf; 110 mph = 31.0 psf; 120 mph = 36.9 psf; 130 mph = 43.3 psf

$C_e =$ 0–15 = 1.06; 20 = 1.13; 25 = 1.19; 30 = 1.23; 40 = 1.31; 60 = 1.43; 80 = 1.53; 100 = 1.61; 120 = 1.67; 160 = 1.79; 200 = 1.87; 300 = 2.05

Exposure D represents the most severe exposure in areas with basic wind speeds of 80 mph or greater, and terrain, which is flat, unobstructed and faces large bodies of water over one mile or more in width relative to any quadrant of the building site. Exposure D extends inland from the shoreline ¼ mile or 10 times the building height, whichever is greater.

Design wind pressure. At any elevation, P, is computed by the following equation:

$$P = C_e C_q q_s I$$

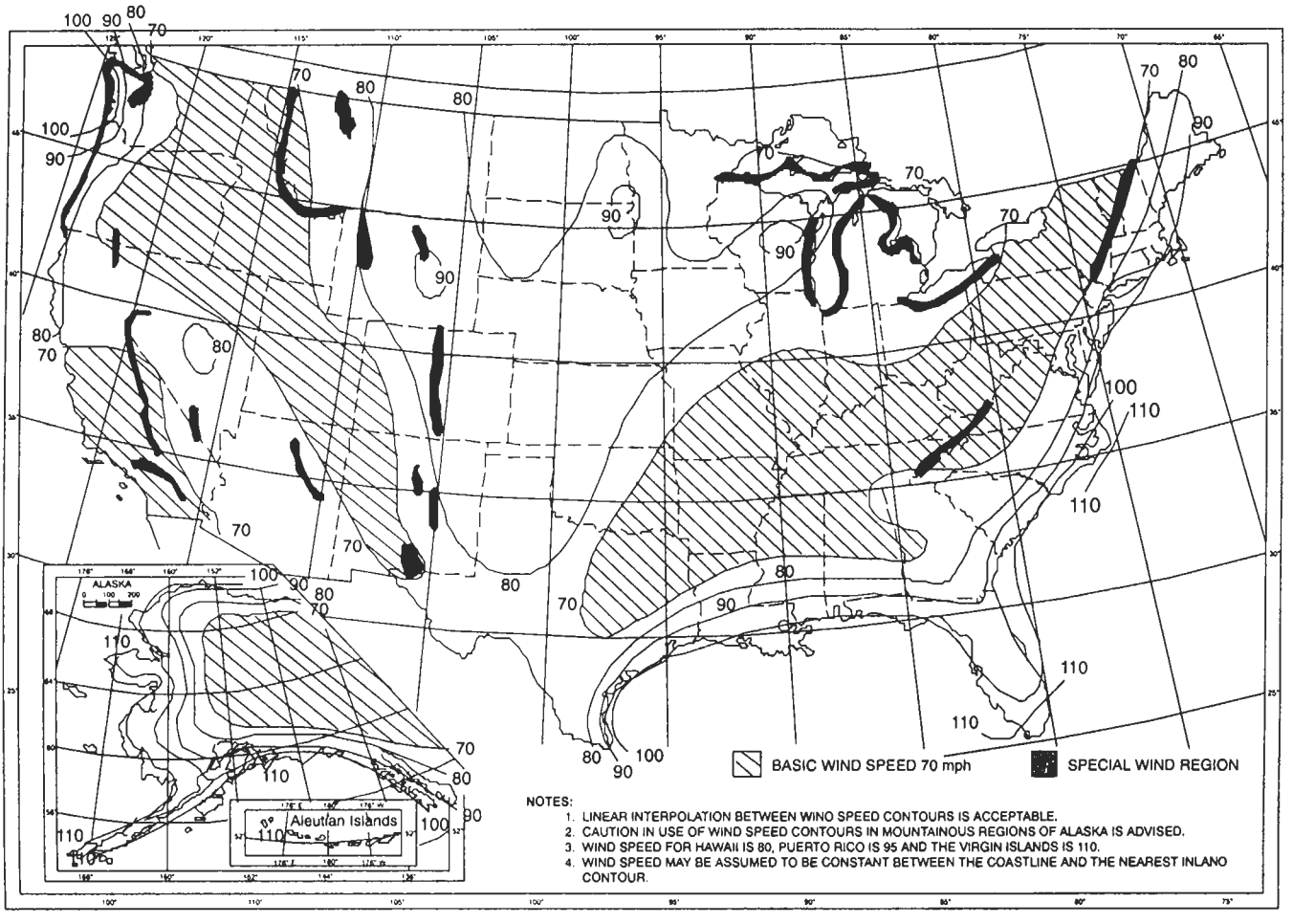

Figure 3-6. Basic wind speed map of the U.S. minimum basic wind speeds in miles per hour (×1.61 for Km/h). (Reproduced from the 1997 edition of the "Uniform Building Code," copyright 1997, with permission of the publisher, the International Conference of Building Officials.)

PROCEDURE 3-3

SEISMIC DESIGN FOR VESSELS [2, 3]

Notation

V = base shear, lb
Z = seismic zone factor (see Figure 3-8)
- Zone 0: 0
- Zone 1: 0.075
- Zone 2A: 0.15
- Zone 2B: 0.20
- Zone 3: 0.3
- Zone 4: 0.4

I = importance factor
- standard facilities 1.0
- hazardous/essential facilities 1.25

R_w = coefficient
- self-supporting stacks 2.9
- vertical vessel on skirt 2.9
- spheres and vessels on braced legs 2.2
- horizontal vessel on pier 2.9
- vertical vessel on unbraced legs 2.2

C_v = coefficient from Table 3-9b
C_a = coefficient from Table 3-9a
S = site coefficient (1.0–2.0 based on soil profile)
W_o = operating weight of vessel, lb
w = uniform weight of vessel or stack, lb/ft
F_t = lateral force applied at top of structure, lb
$F_t = 0.07TV$ or $0.25V$ whichever is less, or
$=0$, if $T < 0.7$ sec
H = overall height of vessel, ft
D = outside diameter of vessel, ft
T = period of vibration, sec (see Figure 3-7)
y = deflection, in.
N = number of column legs
A = cross-sectional area of leg braces, $in.^2$
g = acceleration due to gravity, 386 $in./sec^2$
I_m = moment of inertia of pier, legs, stack, etc., $in.^4$
E = modulus of elasticity, psi
$S_A - S_F$ = soil profile type from Table 3-9c
N_a, N_v = near source factor from Table 3-9d
Seismic source type = from Table 3-9e

Design Procedure

Step 1: Determine the following.

For all zones:

Weight, W_o
Importance factor, I
Soil profile type (Table 3-9c)
Seismic zone factor, Z
Numerical coefficient, R_W

For zone 4 only:

Seismic source type
Distance to fault
Near source factor, N_v

Step 2: Determine or calculate seismic coefficients.

C_a (Table 3-9a)
C_v (Table 3-9b)

Step 3: Determine period of vibration.

T =

Step 4: Calculate the base shear, V.

V is the greater of V_1 or V_2
but need not exceed V_3:

$$V_1 = 0.56C_aIW_o$$

$$V_2 = \frac{C_vIW_o}{R_wT}$$

$$V_3 = \frac{2.5C_aIW_o}{R_w}$$

For zone 4 there is the additional requirement that the base shear shall be at least equal to V_4.

$$V_4 = \frac{1.6\,ZN_vIW_o}{R_w}$$

Step 5: Since the seismic design for pressure vessels is based on allowable stress rather than ultimate strength, the base shear may be reduced by a factor of 1.4.

$$V = \frac{V_n}{1.4}$$

Step 6: Determine if some percentage of the base shear needs to be applied at the top of the vessel, F_t.

If $T < 0.7$ sec, $F_t = 0$
For all other cases $F_t = 0.07TV$
but need not exceed $0.25V$ =

Step 7: The horizontal seismic force, F_h, will then be equal to $V - F_t$. This will be applied to the vessel in accordance with one of the appropriate procedures contained in this chapter.

Step 8: If the procedure is based on a horizontal seismic factor, C_h, this factor shall be as follows:

$$C_h = \frac{V}{W_o}$$

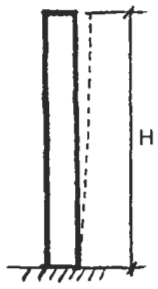

$I = \pi r^3 t$

$y = \dfrac{wH^4}{8EI}$

$T = 1.79\sqrt{\dfrac{wH^4}{EI_m g}}$

See Figure 3-9.

Note uniform weight distribution and constant cross section.

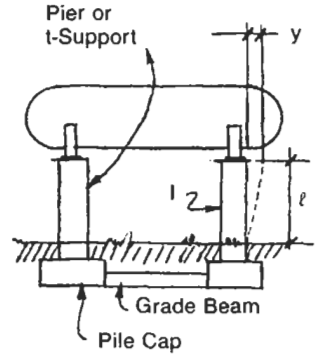

$y = \dfrac{W_o \ell^3}{3EI_m}$

$T = 0.32\sqrt{y}$

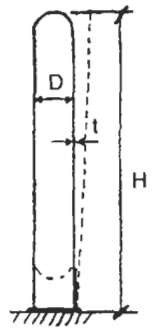

$T = 7.65 \times 10^{-6} \left(\dfrac{H}{D}\right)^2 \sqrt{\dfrac{wD}{t}}$

See Figure 3-9.

Be consistent with units. H, D, and t are in feet.

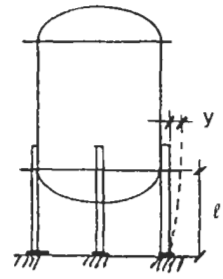

$y = \dfrac{2W_o \ell^3}{3NE(I_x + I_y)}$

$T = 2\pi\sqrt{\dfrac{y}{g}}$

I_x and I_y are properties of legs.



$T = \left(\dfrac{H}{100}\right)^2 \sqrt{\dfrac{\sum w\,\Delta\alpha + \sum W\beta/H}{\sum E\left(\dfrac{D}{10}\right)^3 t\,\Delta\gamma}}$

See Procedure 3-9 for definitions.

Note variation of either cross section or mass.

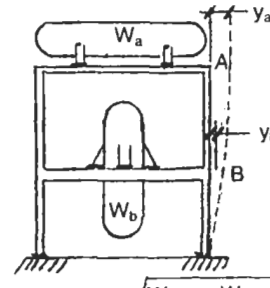

y_{ab} = deflection at B due to lateral load at A

Weights include structure. See Note 1.

$$T = \sqrt{\frac{W_a y_a + W_b y_b + \sqrt{(W_a y_a - W_b y_b)^2 + 4W_a W_b y_{ab}^2}}{2g}}$$

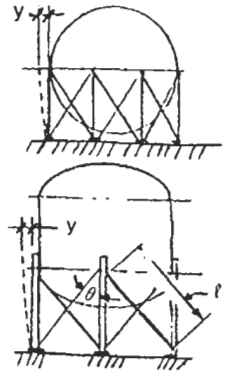

$y = \dfrac{W_o \ell \sin\theta^2}{6EA}$

$T = 2\pi\sqrt{\dfrac{y}{g}}$

Legs over 7 ft should be cross-braced.

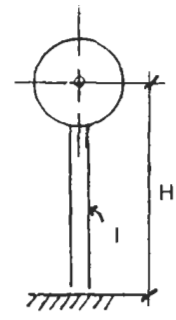

$T = 3.63\sqrt{\dfrac{W_o H^3}{EI_m g}}$

Figure 3-7. Formulas for period of vibration, T, and deflection, y.

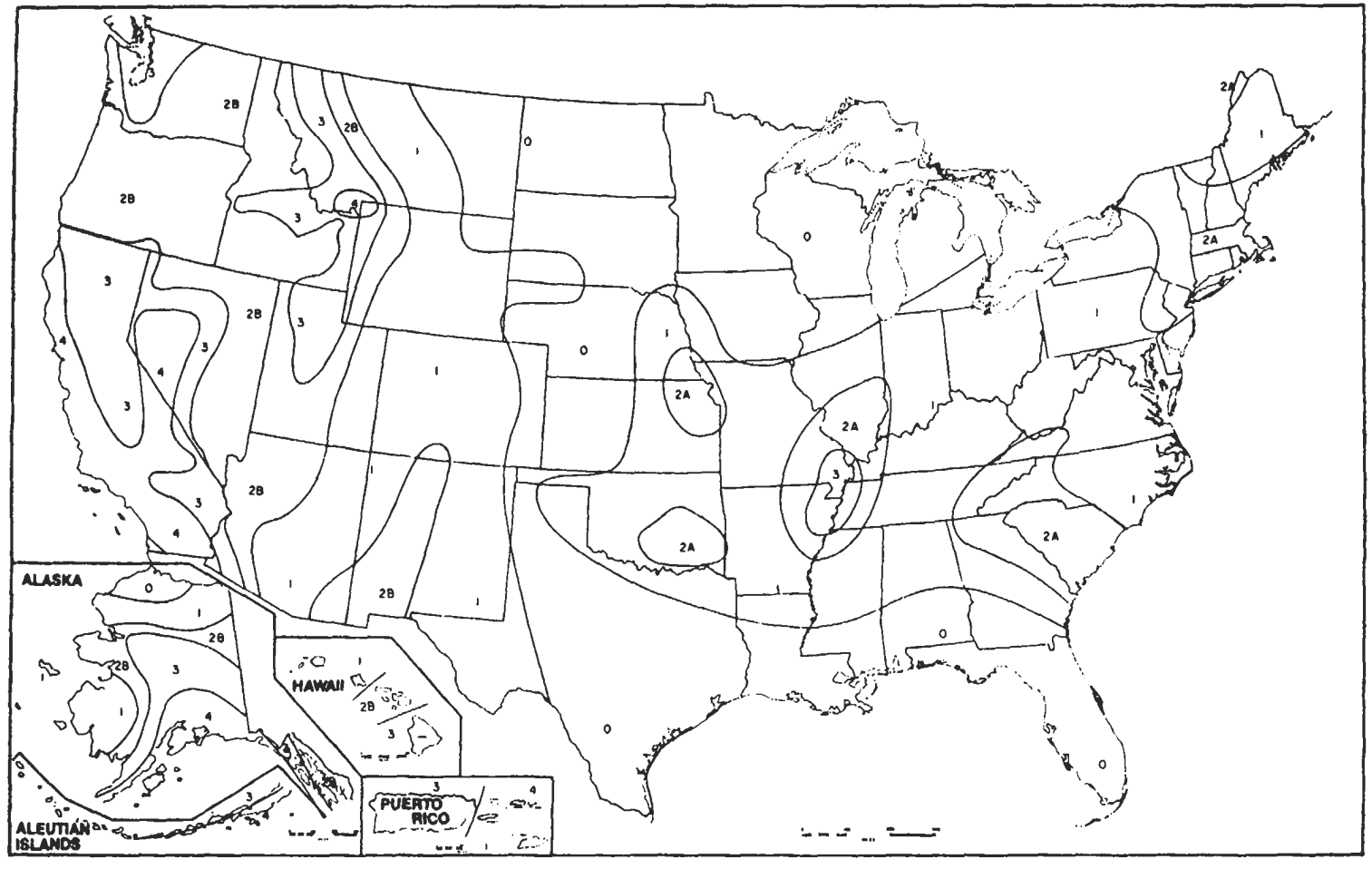

Figure 3-8. Seismic risk map of the United States. Reproduced from the Uniform Building Code, 1997 Edition. Copyright 1997, with permission of the publisher, the International Conference of Building Officials.

Table 3-9a
Seismic Coefficient C_a*

Soil Profile Type	Seismic Zone Factor, Z				
	$Z=0.075$	$Z=0.15$	$Z=0.2$	$Z=0.3$	$Z=0.4$
S_A	0.06	0.12	0.16	0.24	$0.32N_a$
S_B	0.08	0.15	0.20	0.30	$0.40N_a$
S_C	0.09	0.18	0.24	0.33	$0.40N_a$
S_D	0.12	0.22	0.28	0.36	$0.44N_a$
S_E	0.19	0.30	0.34	0.36	$0.36N_a$
S_F	See Footnote 1				

[1]Site-specific geotechnical investigation and dynamic site response analysis shall be performed to determine seismic coefficients for Soil Profile Type S_F.

Table 3-9b
Seismic Coefficient C_V*

Soil Profile Type	Seismic Zone Factor, Z				
	$Z=0.075$	$Z=0.15$	$Z=0.2$	$Z=0.3$	$Z=0.4$
S_A	0.06	0.12	0.16	0.24	$0.32N_v$
S_B	0.08	0.15	0.20	0.30	$0.40N_v$
S_C	0.13	0.25	0.32	0.45	$0.56N_v$
S_D	0.18	0.32	0.40	0.54	$0.64N_v$
S_E	0.26	0.50	0.64	0.84	$0.96N_v$
S_F	See Footnote 1				

[1]Site-specific geotechnical investigation and dynamic site response analysis shall be performed to determine seismic coefficients for Soil Profile Type S_F.

Table 3-9c
Soil Profile Types*

Soil Profile Type	Soil Profile Name/Generic Description	Average Soil Properties for Top 100 Feet (30,480 mm) of Soil Profile		
		Shear Wave Velocity, V_S feet/second (m/s)	Standard Penetration Test, N [or N_{CH} for cohesionless soil layers] (blows/foot)	Undrained Shear Strength, s_u psf (kPa)
S_A	Hard Rock	>5,000 (1,500)	—	—
S_B	Rock	2,500 to 5,000 (760 to 1,500)		
S_C	Very Dense Soil and Soft Rock	1,200 to 2,500 (360 to 760)	>50	>2,000 (100)
S_D	Stiff Soil Profile	600 to 1,200 (180 to 360)	15 to 50	1,000 to 2,000 (50 to 100)
S_E[1]	Soft Soil Profile	<600 (180)	<15	<1,000 (50)
S_F		Soil Requiring Site-specific Evaluation. See Section 1629.3.1.		

[1]Soil Profile Type S_E also includes any soil profile with more than 10 feet (3048 mm) of soft clay, defined as a soil with plasticity index $PI>20$, $W_{mc}\geq 40$ percent, and $s_u<500$ psf (24 kPa). The Plasticity Index, PI, and the moisture content, W_{mc}, shall be determined in accordance with approved national standards.

Table 3-9d
Near-Source Factor N_v*, N_a

Seismic Source Type	Closest Distance to Known Seismic Source[2,3]							
	≤2 km		5 km		10 km		≥15 km	
	N_v	N_a	N_v	N_a	N_v	N_a	N_v	N_a
A	2.0	1.5	1.6	1.2	1.2	1.0	1.0	1.0
B	1.6	1.3	1.2	1.0	1.0	1.0	1.0	1.0
C	1.0	1.0	1.0	1.0	1.0	1.0	1.0	1.0

[1]The Near-Source Factor may be based on the linear interpolation of values for distances other than those shown in the table.
[2]The location and type of seismic sources to be used for design shall be established based on approved geotechnical data (e.g., most recent mapping of active faults by the United States Geological Survey or the California Division of Mines and Geology.
[3]The closest distance to seismic source shall be taken as the minimum distance between the site and the area described by the vertical projection of the source on the surface (i.e., surface projection of fault plane). The surface projection need not include portions of the source at depths of 10 km or greater. The largest value of the Near-Source Factor considering all sources shall be used for design.

Table 3-9e
Seismic Source Type[1]*

Seismic Source Type	Seismic Source Description	Seismic Source Definition[2]	
		Maximum Moment Magnitude, M	Slip Rate, SR (mm/year)
A	Faults that are capable of producing large magnitude events and that have a high rate of seismic activity	$M\geq 7.0$	$SR\geq 5$
B	All faults other than Types A and C	$M\geq 7.0$ $M<7.0$ $M\geq 6.5$	$SR<5$ $SR>2$ $SR<2$
C	Faults that are not capable of producing large magnitude earthquakes and that have a relatively low rate of seismic activity	$M<6.5$	$SR\leq 2$

[1]Subduction sources shall be evaluated on a site-specific basis.
[2]Both maximum moment magnitude and slip rate conditions must be satisfied concurrently when determining the seismic source type.

*Reproduced from the 1997 edition of the "Uniform Building Code," copyright 1997, with permission from publisher, the International Conference of Building Officials.

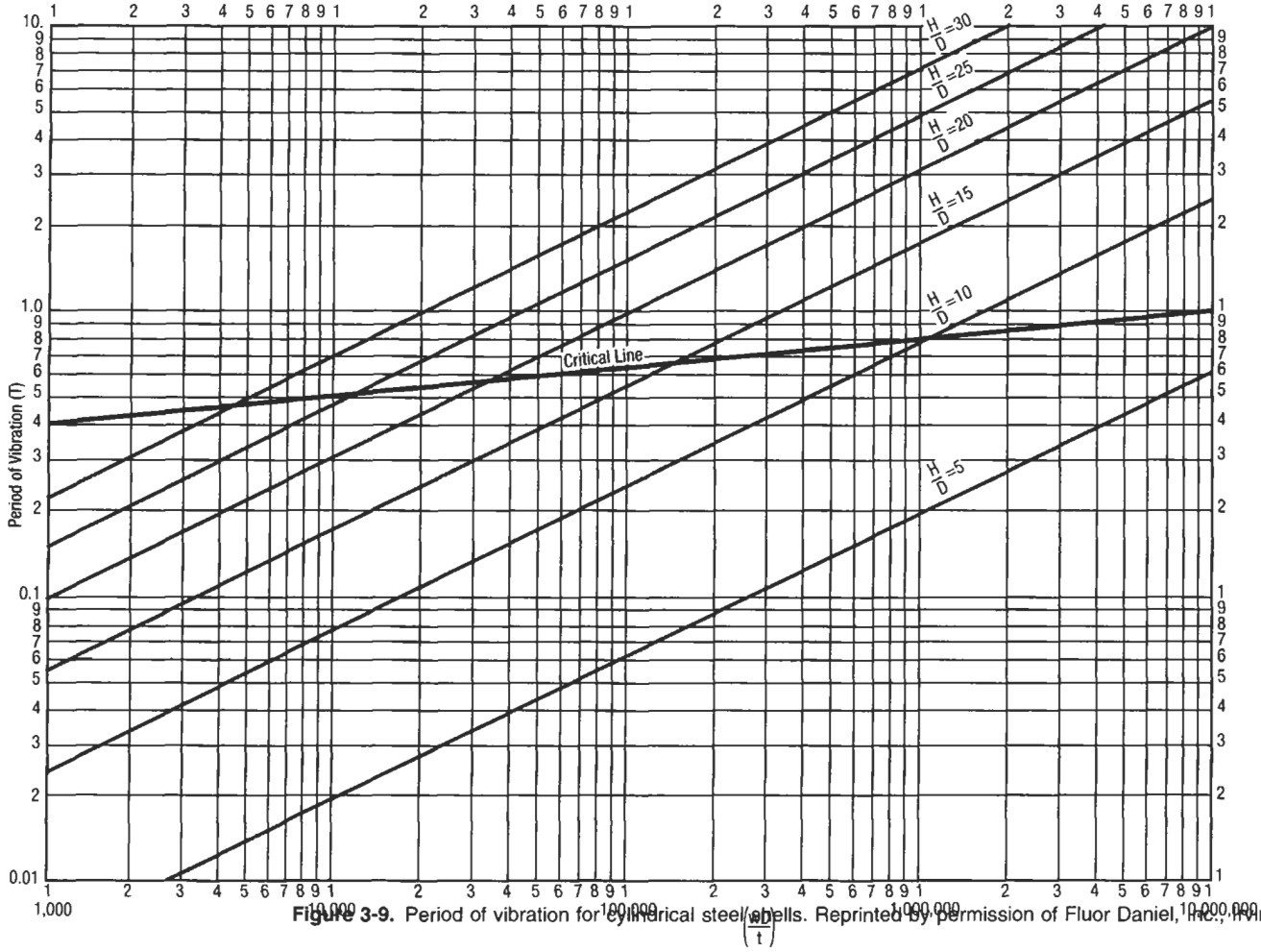

Figure 3-9. Period of vibration for cylindrical steel shells. Reprinted by permission of Fluor Daniel, Inc., Irvine, CA.

General formula for cantilever

$$T = K\sqrt{\frac{wH^4}{EIg}}$$

which for steel cylidrical shell reduces to

$$T = 0.00000765\left(\frac{H}{D}\right)^2\sqrt{\frac{wD}{t}}$$

where T = period, sec
w = weight, lb per ft
H = height, ft
D = diameter of shell, ft
t = thickness of shell, ft

Constant 0.00000765 is based upon:

E = modulus of elasticity of steel
30,000,000 lb per sq in

I = moment of inertia of shell area

$$= 3.142\left(\frac{D}{2}\right)^3 t$$

K = 1.79 for fundamental period of vibration

g = 32.2 ft per sec^2

Notes

1. Vessels mounted in structures at some elevation other than grade generally will experience amplified base motion near and above the natural frequencies of the support structure.

   - *Light vessels* (less than 1% of structure weight):
     a. If vessel frequency > structure frequency, then vessel is subjected to maximum acceleration of the structure.
     b. If vessel frequency < structure frequency, then vessel will not be affected by structure. It will respond as if it were mounted at grade.
   - *Medium vessels* (less than 20% of structure weight): Approximate methods may be used to develop the in-structure response spectra. The method used should account for interaction between vessel and structure (energy feedback). Consideration should be given to account for ductility of the vessel.
   - *Heavy vessels* (single large vessel or multiple large vessels): The vessel(s) is the principal vibrating element. It requires a combined seismic model, which simulates the mass and stiffness properties of vessel and structure.
2. For tall slender vessels, the main concern is bending. For short, squat vessels the main concern is base shear.
3. The procedures outlined in this chapter are static-force procedures, which assume that the entire seismic force due to ground motion is applied instantaneously. This assumption is conservative but greatly simplifies the calculation procedure. In reality earth quakes are time-dependent events and the full force is not realized instantaneously. The UBC allows, and in some cases requires, that a dynamic analysis be performed in lieu of the static force method. Although much more sophisticated, often the seismic loadings are reduced significantly.

PROCEDURE 3-4

SEISMIC DESIGN—VESSEL ON UNBRACED LEGS [4–7]

Notation

A = cross-sectional area, leg, in.^{2}
V = base shear, lb
W = operating weight, lb
n = number of legs
C_v = vertical seismic factor
C_h = horizontal seismic factor
y = static deflection, in.
F_v = vertical seismic force, lb
F_h = horizontal seismic factor, see Procedure 3-3
F_a = allowable axial stress, psi
F_b = allowable bending stress, psi
F_t = seismic force applied at top of vessel, lb
F'_e = Euler stress divided by safety factor, psi
f_l = maximum eccentric load, lb
V_n = horizontal load on leg, lb
F_n = maximum axial load, lb
f_a = axial stress, psi
f_b = bending stress, psi
E = modulus of elasticity, psi
g = acceleration due to gravity, 386 in./sec^2
e = eccentricity of legs, in.
M_b = overturning moment at base, in.-lb
M_t = overturning moment at tangent line, in.-lb
M = bending moment in leg, in.-lb
$\sum I_1$ = summation of moments of inertias of all legs perpendicular to F_h, in.^{4}
$\sum I_2$ = summation of moments of inertia of one leg perpendicular to F_h, in.^{4}
I = moment of inertia of one leg perpendicular to F_h, in.^{4}
C_1 = distance from centroid to extreme fiber, in.
C_m = coefficient, 0.85 for compact members
K_1 = end connection coefficient, 1.5–2.0
T = period of vibration, sec
r = least radius of gyration, in.

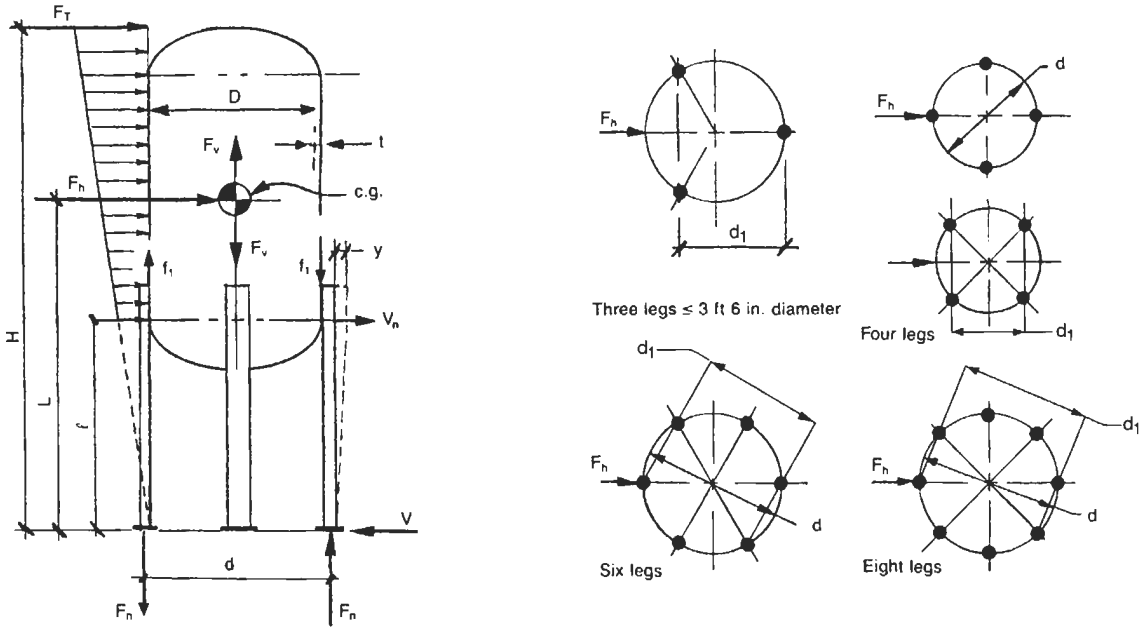

Figure 3-10. Typical dimensional data and forces for a vessel supported on unbraced legs.

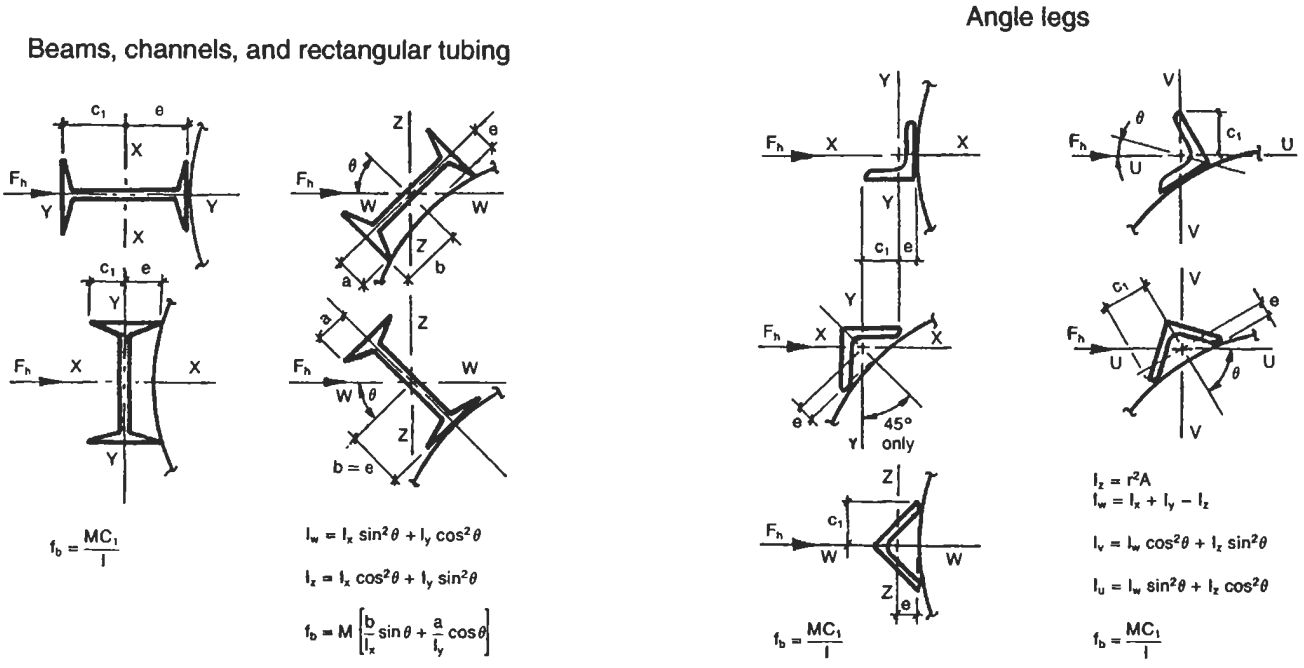

Figure 3-11. Various leg configurations.

Calculations

The following information is needed to complete the leg calculations:

No. _____ I_u = _____
Size _____ I_v = _____
A = _____ $\sum I_1$ = _____
r = _____ $\sum I_2$ = _____
I_x = _____ $K_1\ell/r$ = _____
I_y = _____ F_a = _____
I_z = _____ (see App. L)
I_w = _____

- *Deflection, y, in.*

$$y = \frac{2WI^3}{3nE\sum I_2}$$

Note: Limit deflection to 6 in. per 100 ft or equivalent proportion.

- *Period of vibration, T, sec.*

$$T = 2\pi\sqrt{\frac{y}{g}}$$

- *Base shear, V, lb.*

See Procedure 3-3.

- *Horizontal force at top of vessel, F_t, lb.*

$F_t = 0.07TV$ or $0.25V$
whichever is less or
$= 0$ if $T < 0.7$ sec

- *Horizontal force at c.g. of vessel, F_h, lb.*

$F_h = V - F_t$
or
$F_h = C_hW$

- *Vertical force at c.g. of vessel, F_v, lb.*

Downward: $(-)F_v = W$
or $(I + C_v)W$
Upward: $(+)F_v = (C_v - 1)W$
if vertical seismic is greater than 1.0

- *Overturning moment at base, in.-lb.*

$M_b = LF_h = HF_t$

Note: Include piping moments if applicable.

- *Overturning moment at bottom tangent line, in.-lb.*

$$M_t = (L - \ell)F_h + (H - \ell)F_t$$

- *Maximum eccentric load, lb.*

$$f_1 = \frac{-F_v}{n} - \frac{4M_t}{nD}$$

Note: f_1 is not considered in leg bending stress if legs are not eccentrically loaded.

- *Horizontal load distribution, V_n (See Figure 3-12).*

The horizontal load on any one given leg, V_n, is proportional to the stiffness of that one leg perpendicular to the applied force relative to the stiffness of the other legs. The

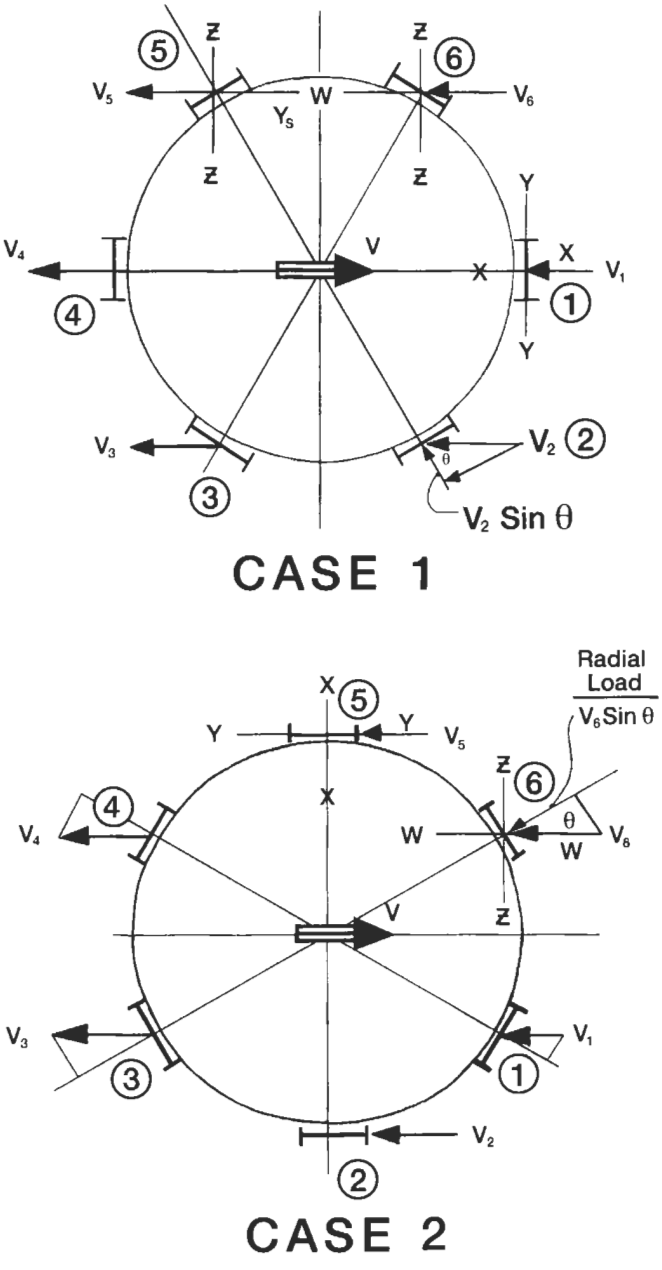

Figure 3-12. Load diagrams for horizontal load distribution.

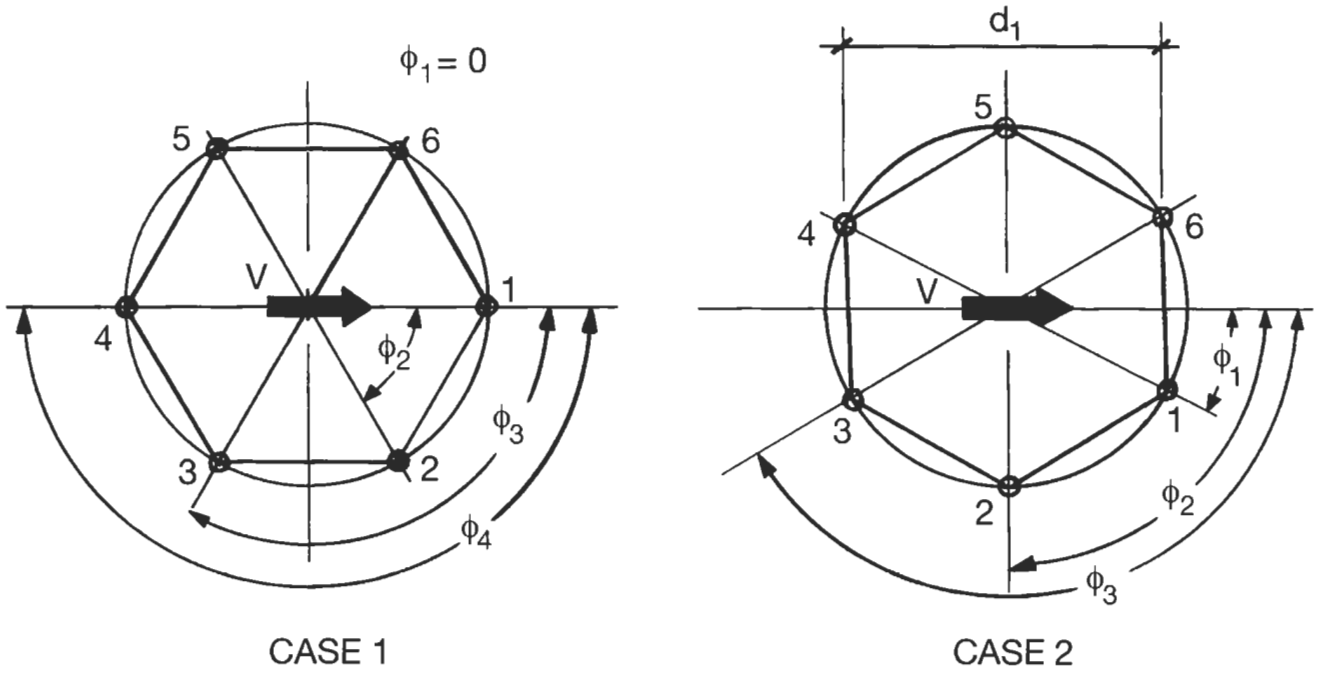

Figure 3-13. Load diagrams for vertical load distribution.

greater loads will go to the stiffer legs. Thus, the general equation:

$$V_n = \frac{VI}{\sum I_1} \quad \text{and} \quad \sum V_n = V$$

- *Vertical load distribution, F_n (See Figure 3-13).*

The vertical load distribution on braced and unbraced legs is identical. The force on any one leg is equal to the dead load (weight) plus the live load (greater of wind or seismic) and the angle of that leg to the direction of force, V. The general equation for each case is as follows:

For Case 1:

$$F_D = \frac{F_v}{n}$$

$$F_L = \frac{4M}{nd}$$

$$F_n = F_D \pm F_L \cos \phi_n$$

For Case 2:

$$F_D = \frac{F_v}{n}$$

$$F_L = \frac{M}{2d_1}$$

$$F_n = F_D \pm F_L \cos \phi_n$$

- *Bending moment in leg, M, in.-lb.*

$$M = f_1 e \pm V_n \ell$$

- *Axial stress in leg, f_a, psi.*

$$f_a = \frac{F_n}{A}$$

- *Bending stress in leg, f_b, psi.*

$f_b =$
Select appropriate formula from Figure 3-11.

- *Combined stress.*

$$\text{If } \frac{f_a}{F_a} \le 0.15, \text{ then } \frac{f_a}{F_a} + \frac{f_b}{F_b} < 1$$

$$\text{If } \frac{f_a}{F_a} > 0.15, \text{ then } \frac{f_a}{F_a} + \frac{C_m f_b}{\left[1 - \frac{f_a}{F'_e}\right] F_b} < 1$$

where $C_m = 0.85$

$$F'_e = \frac{12\pi^2 E}{23\left(\frac{k_1 \ell}{r}\right)^2}$$

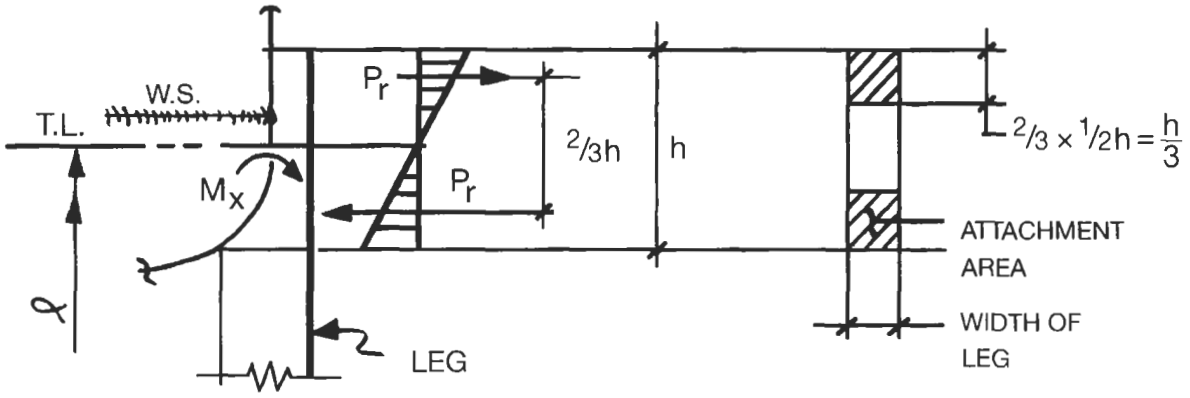

Figure 3-14. Application of local loads in head and shell.

Note: AISC Code allows a one-third increase in allowable stress due to seismic. F_a, F_b, and F'_e may be increased.

- *Maximum compressive stress in shell, f_c, psi (See Figure 3-15).*

$L_1 = W + 2h$

Above leg:

$$f_c = \frac{f_1}{L_1 t}$$

General:

$$f_c = (-)\frac{F_v}{\pi D t} - \frac{4M_t}{\pi D^2 t}$$

F_c = allowable compressive stress is factor "B" from ASME Code.

$$\text{Factor "A"} = \frac{0.125t}{R}$$

"B" = from applicable material chart of ASME Code, Section II, Part D, Subpart 3.

- *Shear load in welds attaching legs.*

$$\frac{f_1}{2h} = \frac{\text{lb}}{\text{in. of weld}}$$

See Table 3-11 for allowable loads on fillet welds in shear.

- *Local load in shell (See Figure 3-14).*

For unbraced designs, the shell or shell/head section to which the leg is attached shall be analyzed for local loading due to bending moment on leg.

$M_x = V_n \sin\theta\ell$

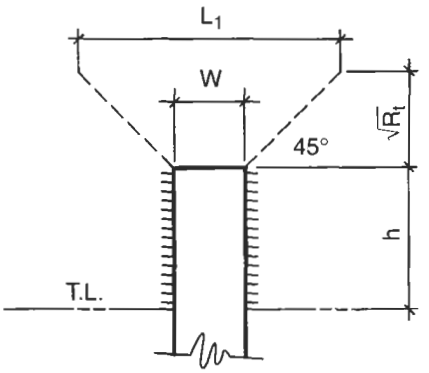

Figure 3-15. Dimensions of leg attachment.

- *Anchor bolts.* If $W > 4\ M_b/d$, then no uplift occurs and anchor bolts should be made a minimum of $\frac{3}{4}$ in. in diameter. If uplift occurs, then the cross-sectional area of the bolt required would be:

$$A_b = \frac{f_2}{S_t} \quad \text{in.}^2$$

where A_b = area of bolt required
f_2 = axial tension load
S_t = allowable stress in tension

Table 3-10
Vertical Load on Legs, F_n

Leg	Case 1	Case 2
6 Legs		
1	$F_D - F_L$	$F_D - 0.866F_L$
2	$-0.5F_L$	0
3	$+0.5F_L$	$+0.866F_L$
4	$+F_L$	$+0.866F_L$
5	$+0.5F_L$	0
6	$-0.5F_L$	$-0.866F_L$
8 Legs		
1	$F_D - F_L$	$F_D - 0.924F_L$
2	$-0.707F_L$	-0.383
3	0	$+0.383$
4	$+0.707F_L$	$+0.924$
5	$+F_L$	$+0.924$
6	$-0.707F_L$	$+0.383$
7	0	-0.383
8	$+0.707F_L$	-0.924
16 Legs		
1	$F_D - F_L$	$F_D - 0.924F_L$
2	$-0.924F_L$	-0.382
3	$-0.707F_L$	$+0.556$
4	$-0.383F_L$	$+0.195$
5	0	$+0.195$
6	$+0.383F_L$	$+0.556$
7	$+0.707F_L$	$+0.831$
8	$+0.924F_L$	$+0.981$
9	$+F_L$	$+0.981$
10	$-0.924F_L$	$+0.831$
11	$+0.707F_L$	$+0.556$
12	$-0.383F_L$	$+0.195$
13	0	-0.195
14	$-0.383F_L$	-0.556
15	$-0.707F_L$	-0.831
16	$-0.924F_L$	-0.981

Leg	Case 1	Case 2
10 Legs		
1	$F_D - F_L$	$F_D - 0.951F_L$
2	$-0.809F_L$	$-0.588F_L$
3	$-0.309F_L$	0
4	$+0.309F_L$	$+0.588F_L$
5	$+0.809F_L$	$+0.951F_L$
6	$+F_L$	$+0.951F_L$
7	$+0.809F_L$	$+0.588F_L$
8	$+0.309F_L$	0
9	$-0.309F_L$	$+0.588F_L$
10	$-0.809F_L$	$+0.951F_L$
12 Legs		
1	$F_D - F_L$	$F_D - 0.966F_L$
2	$-0.866F_L$	-0.707
3	$-0.5F_L$	-0.259
4	0	$+0.259$
5	$+0.5F_L$	$+0.707$
6	$+0.866F_L$	$+0.966$
7	$+F_L$	$+0.966$
8	$+0.866F_L$	$+0.707$
9	$+0.5F_L$	$+0.259$
10	0	-0.259
11	$-0.5F_L$	-0.707
12	$-0.866F_L$	-0.966

Notes

1. Legs longer than 7 ft should be cross-braced.
2. Do not use legs to support vessels where high vibration, shock, or cyclic service is anticipated.
3. Select legs that give maximum strength for minimum weight for most efficient design. These sections will also distribute local loads over a larger portion of the shell.
4. Legs may be made of pipe, channel, angle, rectangular tubing, or beam sections.
5. This procedure assumes a one-mass bending structure which is not technically correct for tall vessels. Tall towers would have distributed masses and should be designed independently of support structure, i.e., legs.

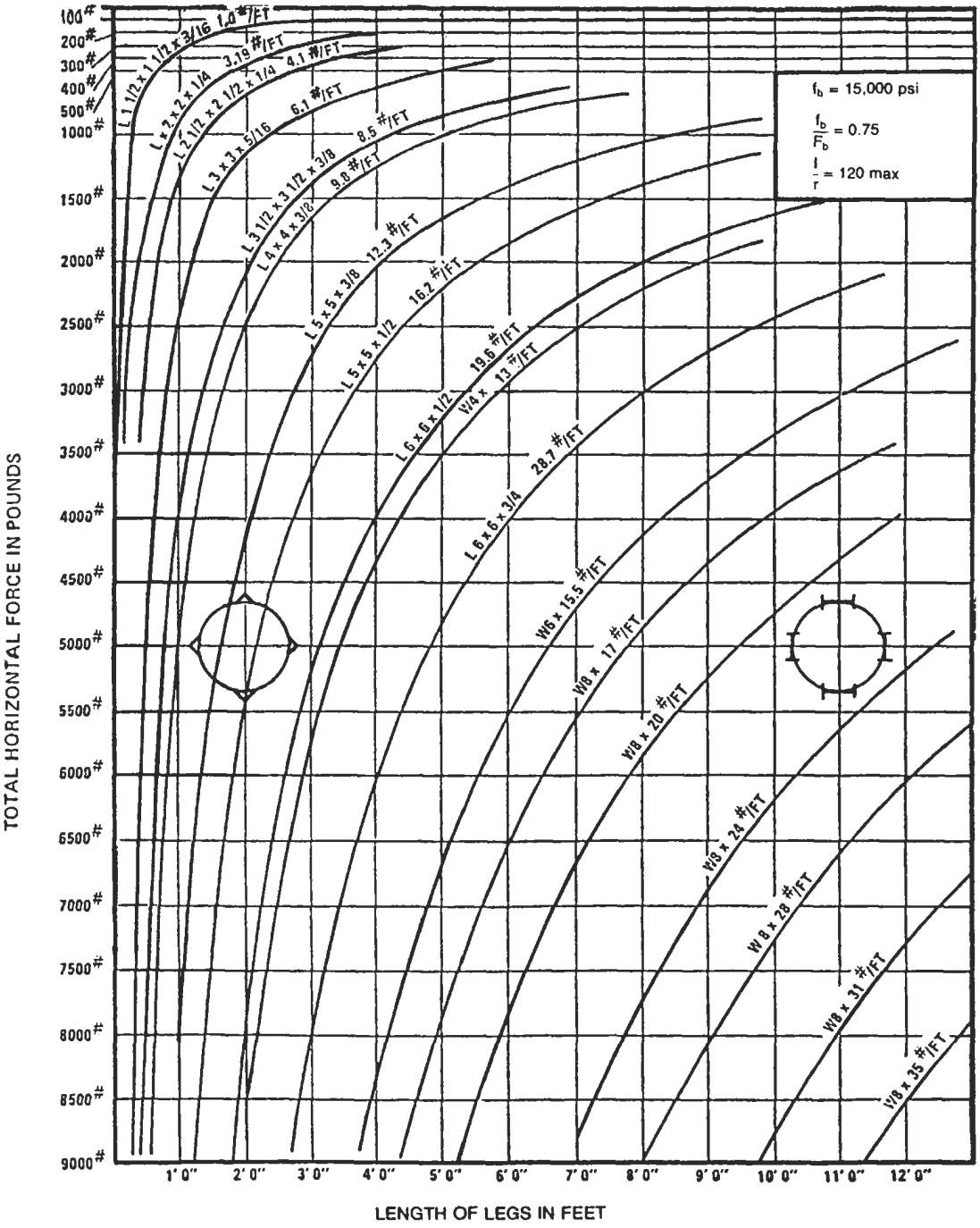

Figure 3-16. Leg sizing chart for vessel supported on four legs.

PROCEDURE 3-5

SEISMIC DESIGN—VESSEL ON BRACED LEGS [7]

Notation

A = cross-sectional area of brace, in.^{2}
A_1 = cross-sectional area of leg, in.^{2}
V = base shear, lb
E = modulus of elasticity, psi
W = operating weight of vessel, lb
Δl = change in length of brace, lb
F_h = horizontal seismic force, lb
F_v = vertical seismic force, lb
F_t = lateral force at top of vessel, lb
F_a = allowable axial stress, psi
F_y = minimum specified yield stress, psi
V_n = horizontal load on one leg, lb
f = axial load in brace, lb
d_1 = distance between extreme legs, in.
n = number of active rods per panel = 1 for sway-bracing, 2 for cross-bracing
F_L = axial load on leg due to overturning moment, lb
F_D = axial load on leg due to dead wt, lb
F_n = combined axial load on leg, lb
f_a = axial stress, psi
y = static deflection, in.
T = maximum period of vibration, sec
g = acceleration due to gravity, 386 in./sec^2
r = least radius of gyration, in.
M = overturning moment, in.-lb
N = number of legs
d = center line diameter of leg circle, in.
C_1 = chord length between legs, in.
C_h = horizontal seismic factor, see Procedure 3-3
C_v = vertical seismic factor
K_1 = end connection coefficient
I_1 = moment of inertia, cross brace, in.^{4}
S_1 = slenderness ratio
$\tan \theta = h'/C'_1$
l = length of cross brace; $= h'/\sin \theta$

This procedure is used for calculating the distribution of vertical and horizontal forces due to wind or seismic loadings for vessels, spheres, elevated tanks, and bins supported on cross-braced legs or columns.

To design the legs, base plates, cross-bracing, anchor bolts, ring girder, and foundations, it is necessary for the designer to determine the actual distribution of forces.

The horizontal load due to wind or seismic is distributed to the legs through the cross-bracing or sway rods. The legs, in turn, transfer the forces to the vessel base, ring girder, or support structure. The angle between the applied force and the cross-bracing determines the magnitude of the imposed load at that point.

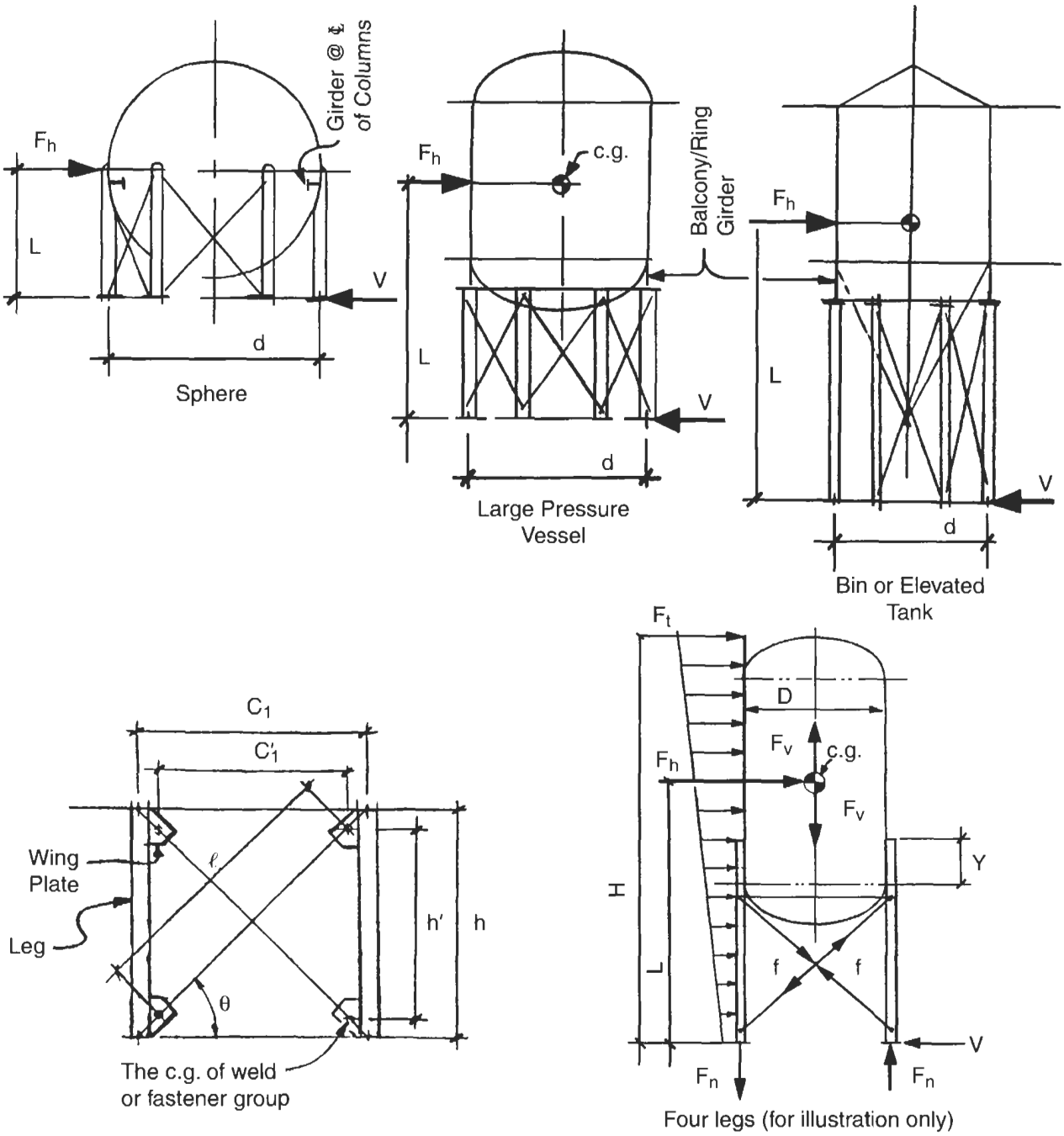

Figure 3-17. Typical dimensional data and forces for a vessel supported on braced legs.

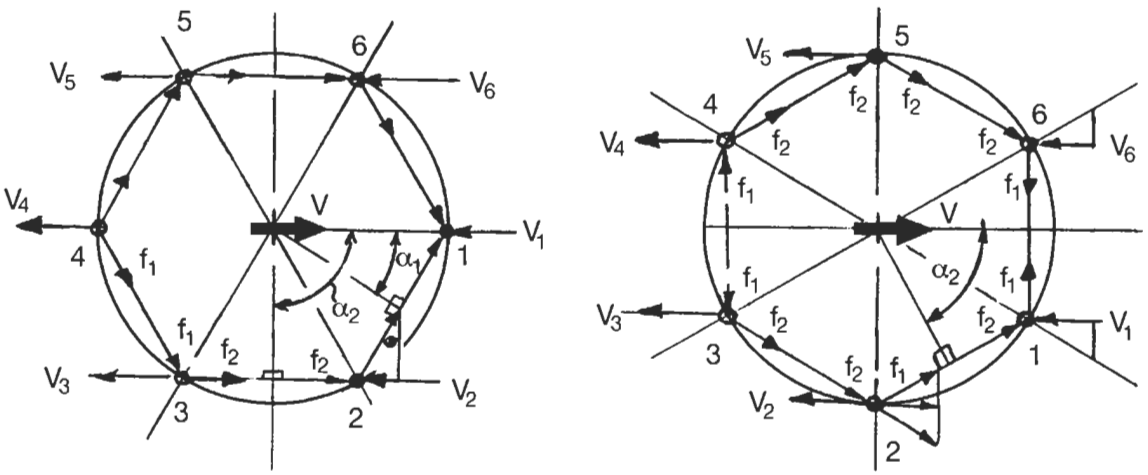

Figure 3-18. Load diagrams for horizontal load distribution.

Horizontal Load Distribution, V_n

The horizontal load on any one leg is dependent on the direction of the reactions of the leg bracing. The horizontal force, V, is transmitted to the legs through the bracing. Thus, the general equation:

$$V_n = \frac{V\sin\alpha_n}{N} \qquad \text{and} \qquad \sum V_n = V$$

Vertical Load Distribution, F_n

The vertical load distribution on braced and unbraced legs is identical. The force on any one leg is equal to the dead load (weight) plus the live load (greater of wind or seismic) and the angle of that leg to the direction of force, V. The general equation for each case is as follows

For Case 1:

$$F_D = \frac{F_v}{N}$$

$$F_L = \frac{4M}{Nd}$$

$$F_n = F_D \pm F_L \cos\phi_n$$

For Case 2:

$$F_D = \frac{F_v}{N}$$

$$F_L = \frac{M}{2d_1}$$

$$F_n = F_D \pm F_L \cos\phi_n$$

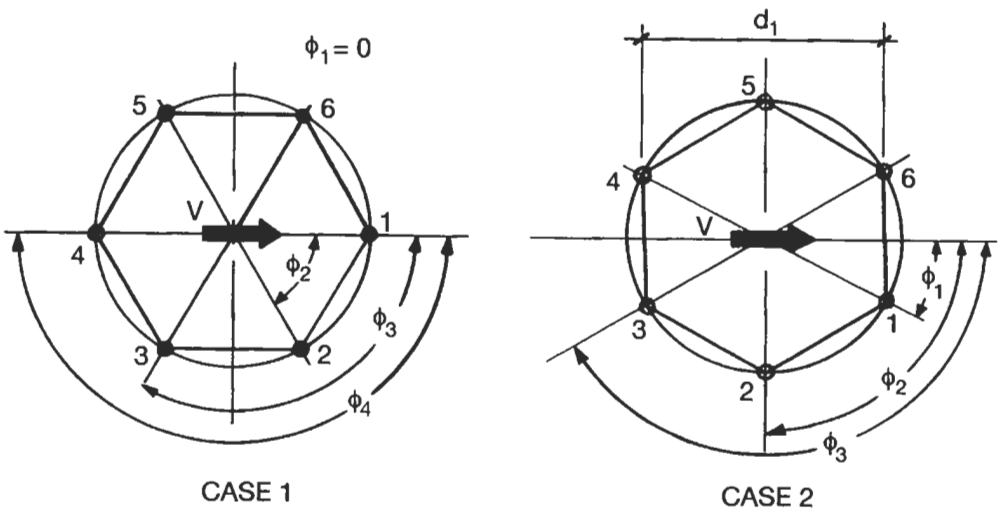

Figure 3-19. Load diagrams for vertical load distribution.

Calculations

1. *Horizontal seismic force, F_h.*

   UBC design: See Procedure 3-3.

   $F_h = C_h, W$, or V

2. *Sway-bracing.* Sway braces are tension only members, not connected at the center. There is one per panel alternating in each adjacent panel.

   - *Maximum tension force in sway brace, f.*

   $$f = \frac{V_n}{n \cos\theta}$$

   - *Axial stress, tension, f_a.*

   $$f_a = \frac{f}{A} < 0.66F_y$$

3. *Cross-bracing.* Cross braces are tension and compression members. They may be pinned at the center or not. If the slenderness ratio of the cross brace exceeds 120, then the cross-bracing must be pinned at the center.

   - *Maximum force in cross-bracing, f.*

   $$f_n = \frac{V_n}{n \cos\theta}$$

   - *Required moment of inertia, I_1.*

   Pinned at center

   $$I_1 = \frac{f\ell^2}{4\pi^2 E}$$

   Not pinned at center

   $$I_1 = \frac{f\ell^2}{\pi^2 E}$$

   - *Slenderness ratio, S_1.*

   Pinned at center

   $$S_1 = \frac{k_1\ell}{2r}$$

   Not pinned at center

   $$S_1 = \frac{k_1\ell}{r}$$

   Select size of cross-bracing:_____

   l=_____ A=_____ r=_____

   - *Axial stress, tension, or compression, f_a.*

   $$f_a = (\pm)\frac{f}{A}$$

   tension: $(+) \leq 0.66F_y$

   compression: $(-) \leq F_a$ from AISC Code

4. *End connections.*

   $$\text{Shear per bolt} = \frac{0.5(f)}{\text{no. of bolts}}$$

   $$\text{Shear per inch of weld} = \frac{0.5(f)}{\text{in. of weld}}$$

5. *Seismic factors.*

   - *Change in length of brace, Δl.*

   $$\Delta l = \frac{f\ell}{EA}$$

   - *Static deflection, y.*

   $$y = \frac{\Delta l}{\cos\theta}$$

   - *Period of vibration, T.*

   $$T = 2\pi\sqrt{\frac{y}{g}}$$

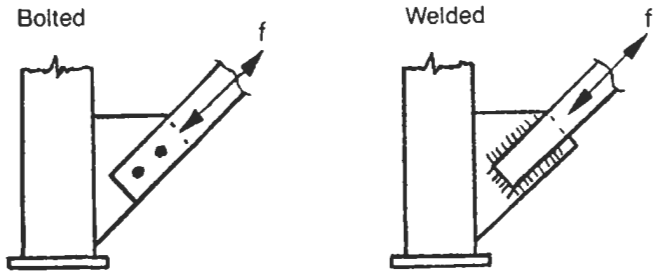

Figure 3-20. Typical end connections of leg bracing.

Table 3-11
Allowable Load in kips

Bolt Size	A-307	A-325
5/8 in.	3.1	6.4
3/4 in.	4.4	9.3
7/8 in.	6.0	12.6
1 in.	7.9	16.5
1 1/8 in.	9.9	20.9
Weld Size	**E60XX***	**E70XX***
3/16 in.	2.39	2.78
1/4 in.	3.18	3.71
5/16 in.	3.98	4.64
3/8 in.	4.77	5.57
7/16 in.	5.56	6.50

*kips/in. of weld.

where $g = 386\ \text{in./sec}^2$

6. *Design of legs.*

- *Force at top of vessel, F_t (UBC design only).*

$F_t = 0.07TV$ or $0.25V$

whichever is less or

$F_t = 0$ if $T < 0.7\ \text{sec}$

- *Vertical force, F_v.*

UBC design: $F_v = W$
with vertical seismic factor:

$F_v = \text{up} = (C_v - 1)W$
$= \text{down} = (1 + C_v)W = (-)$

- *Overturning moment at base, M.*

UBC design: $M = L(F_h - F_t) + HF_t$
Other: $M = LF_h$

- *Axial stress, f_a.*

$$f_a = \frac{F_n}{A_1}$$

Table 3-12
Summary of Loads V_n and F_n

Legs #		Case 1 At Posts		Case 2 Between Posts	
		Horiz. (V_n)	Vert. (F_n)	Horiz. (V_n)	Vert. (F_n)
6 Legs	1	0.0833V	$F_D + F_L$	0.125V	$F_D + 0.866F_L$
	2	0.2083V	$F_D + 0.5F_L$	0.25V	F_D
	3	0.2083V	$F_D - 0.5F_L$	0.125V	$F_D - 0.866F_L$
	4	0.0833V	$F_D - F_L$	0.125V	$F_D - 0.866F_L$
	5	0.2083V	$F_D - 0.5F_L$	0.25V	F_D
	6	0.2083V	$F_D + 0.5F_L$	0.125V	$F_D + 0.866F_L$
8 Legs	1	0.0366V	$F_D + F_L$	0.0625V	$F_D + 0.9239F_L$
	2	0.125V	$F_D + 0.707F_L$	0.1875V	$F_D + 0.3827F_L$
	3	0.2134V	F_D	0.1875V	$F_D - 0.3827F_L$
	4	0.125V	$F_D - 0.707F_L$	0.0625V	$F_D - 0.9239F_L$
	5	0.0366V	$F_D - F_L$	0.0625V	$F_D - 0.9239F_L$
	6	0.125V	$F_D - 0.707F_L$	0.1875V	$F_D - 0.3827F_L$
	7	0.2134V	F_D	0.1875V	$F_D + 0.3827F_L$
	8	0.125V	$F_D + 0.707F_L$	0.0625V	$F_D + 0.9239F_L$
10 Legs	1	0.0191V	$F_D + F_L$	0.0346V	$F_D + 0.9511F_L$
	2	0.0750V	$F_D + 0.809F_L$	0.125V	$F_D + 0.5878F_L$
	3	0.1655V	$F_D + 0.309F_L$	0.1809V	F_D
	4	0.1655V	$F_D - 0.309F_L$	0.125V	$F_D - 0.5878F_L$
	5	0.0750V	$F_D - 0.809F_L$	0.0346V	$F_D - 0.9511F_L$
	6	0.0191V	$F_D - F_L$	0.0346V	$F_D - 0.9511F_L$
	7	0.0750V	$F_D - 0.809F_L$	0.125V	$F_D - 0.5878F_L$
	8	0.1655V	$F_D - 0.309F_L$	0.1809V	F_D
	9	0.1655V	$F_D + 0.309F_L$	0.125V	$F_D + 0.5878F_L$
	10	0.0750V	$F_D + 0.809F_L$	0.0346V	$F_D + 0.9511F_L$
12 Legs	1	0.0112V	$F_D + F_L$	0.0209V	$F_D + 0.9659F_L$
	2	0.0472V	$F_D + 0.866F_L$	0.0834V	$F_D + 0.7071F_L$
	3	0.1194V	$F_D + 0.5F_L$	0.1458V	$F_D + 0.2588F_L$
	4	0.1555V	F_D	0.1458V	$F_D - 0.2588F_L$
	5	0.1194V	$F_D - 0.5F_L$	0.0834V	$F_D - 0.7071F_L$
	6	0.0472V	$F_D - 0.866F_L$	0.0209V	$F_D - 0.9659F_L$
	7	0.0112V	$F_D - F_L$	0.0209V	$F_D - 0.9659F_L$
	8	0.0472V	$F_D - 0.866F_L$	0.0834V	$F_D - 0.7071F_L$
	9	0.1194V	$F_D - 0.5F_L$	0.1458V	$F_D - 0.2588F_L$
	10	0.1555V	F_D	0.1458V	$F_D - 0.2588F_L$
	11	0.1194V	$F_D + 0.5F_L$	0.0834V	$F_D - 0.7071F_L$
	12	0.0472V	$F_D + 0.866F_L$	0.0209V	$F_D + 0.9659F_L$
16 Legs	1	0.0048V	$F_D + F_L$	0.0091V	$F_D + 0.9808F_L$
	2	0.0217V	$F_D + 0.9239F_L$	0.0404V	$F_D + 0.8315F_L$
	3	0.0625V	$F_D + 0.7071F_L$	0.0846V	$F_D + 0.5556F_L$
	4	0.1034V	$F_D + 0.3827F_L$	0.1158V	$F_D + 0.1951F_L$
	5	0.1202V	F_D	0.1158V	$F_D - 0.1951F_L$
	6	0.1034V	$F_D - 0.3827F_L$	0.0846V	$F_D - 0.5556F_L$
	7	0.0625V	$F_D - 0.7071F_L$	0.0404V	$F_D - 0.8315F_L$
	8	0.0217V	$F_D - 0.9239F_L$	0.0091V	$F_D - 0.9808F_L$
	9	0.0048V	$F_D - F_L$	0.0091V	$F_D - 0.9808F_L$
	10	0.0217V	$F_D - 0.9239F_L$	0.0404V	$F_D - 0.8315F_L$
	11	0.0625V	$F_D - 0.7071F_L$	0.0846V	$F_D - 0.5556F_L$
	12	0.1034V	$F_D - 0.3827F_L$	0.1158V	$F_D - 0.1951F_L$
	13	0.1202V	F_D	0.1158V	$F_D + 0.1951F_L$
	14	0.1034V	$F_D + 0.3827F_L$	0.0846V	$F_D + 0.5556F_L$
	15	0.0625V	$F_D + 0.7071F_L$	0.0404V	$F_D + 0.8315F_L$
	16	0.0217V	$F_D + 0.9239F_L$	0.0091V	$F_D + 0.9808F_L$

- *Slenderness ratio for legs, S_1.*

$$S_1 = \frac{K_1 h'}{r}$$

$K_1 = 0.5$ to 1.0

- *Allowable compressive stress, F_a.*

F_a = from AISC (see App. L)

Table 3-13
Dimension, d_1

No. of Legs	d_1
3	0.75d
4	0.705d
6	0.865d
8	0.925d
10	0.95d
12	0.965d
16	0.98d

Table 3-14
Suggested Sizes of Legs and Cross-Bracing

Vessel O.D. (in.)	Tan to Tan Length (in.)	Support Leg Angle Sizes (in.)	Base Plate Size (in.)	Bracing Angle Size (in.)	Bolt Size (in.)	Y (in.)
Up to 30	Up to 240	(3) 3 × 3 × ¼	6 × 6 × ⅜	2 × 2 × ¼	¾	12
	Up to 120	(4) 3 × 3 × ¼	6 × 6 × ⅜		¾	8
30 to 42	121 to 169	(4) 3 × 3 × ¼	6 × 6 × ⅜	2 × 2 × ¼	¾	10
	170 to 240	(4) 3 × 3 × ⅜	6 × 6 × ½		¾	12
	Up to 120	(4) 3 × 3 × ⅜	6 × 6 × ½	2½ × 2½ × ¼	¾	8
43 to 54	121 to 169	(4) 3 × 3 × ⅜	6 × 6 × ½		¾	10
	170 to 240	(4) 4 × 4 × ⅜	8 × 8 × ⅜		¾	12
	Up to 120	(4) 4 × 4 × ⅜	8 × 8 × ⅜	2½ × 2½ × ¼	1	8
55 to 56	121 to 169	(4) 4 × 4 × ½	8 × 8 × ½		1	10
	170 to 240	(4) 4 × 4 × ½	8 × 8 × ½		1	12
	Up to 120	(4) 5 × 5 × ⅜	9 × 9 × ½	3 × 3 × ¼	1⅛	8
67 to 78	121 to 169	(4) 5 × 5 × ⅜	9 × 9 × ½		1⅛	10
	170 to 240	(4) 6 × 6 × ½	10 × 10 × ½		1⅛	12
	Up to 120	(4) 6 × 6 × ½	10 × 10 × ½	3 × 3 × ¼	1⅛	10
79 to 80	121 to 169	(4) 6 × 6 × ½	10 × 10 × ½		1⅛	12
	170 to 240	(4) 6 × 6 × ½	10 × 10 × ½		1⅜	12
	Up to 120	(4) 6 × 6 × ½	10 × 10 × ½	3 × 3 × ⅜	1⅜	12
91 to 102	121 to 169	(6) 6 × 6 × ½	10 × 10 × ½		1⅜	12
	170 to 240	(6) 6 × 6 × ⅝	10 × 10 × ¾		1⅜	12

Notes

1. Cross-bracing the legs will conveniently reduce bending in legs due to overturning moments (wind and equipment) normally associated with unbraced legs. The lateral bracing of the legs must be sized to take lateral loads induced in the frame that would otherwise cause the legs to bend.
2. Legs may be made from angles, pipes, channels, beam sections, or rectangular tubing.
3. Legs longer than about 7 ft should be cross-braced.
4. Check to see if the cross-bracing interferes with piping from bottom head.
5. Shell stresses at the leg attachment should be investigated for local loads. For thin shells, extend "Y." Legs should be avoided as a support method for vessels with high shock loads or vibration service.

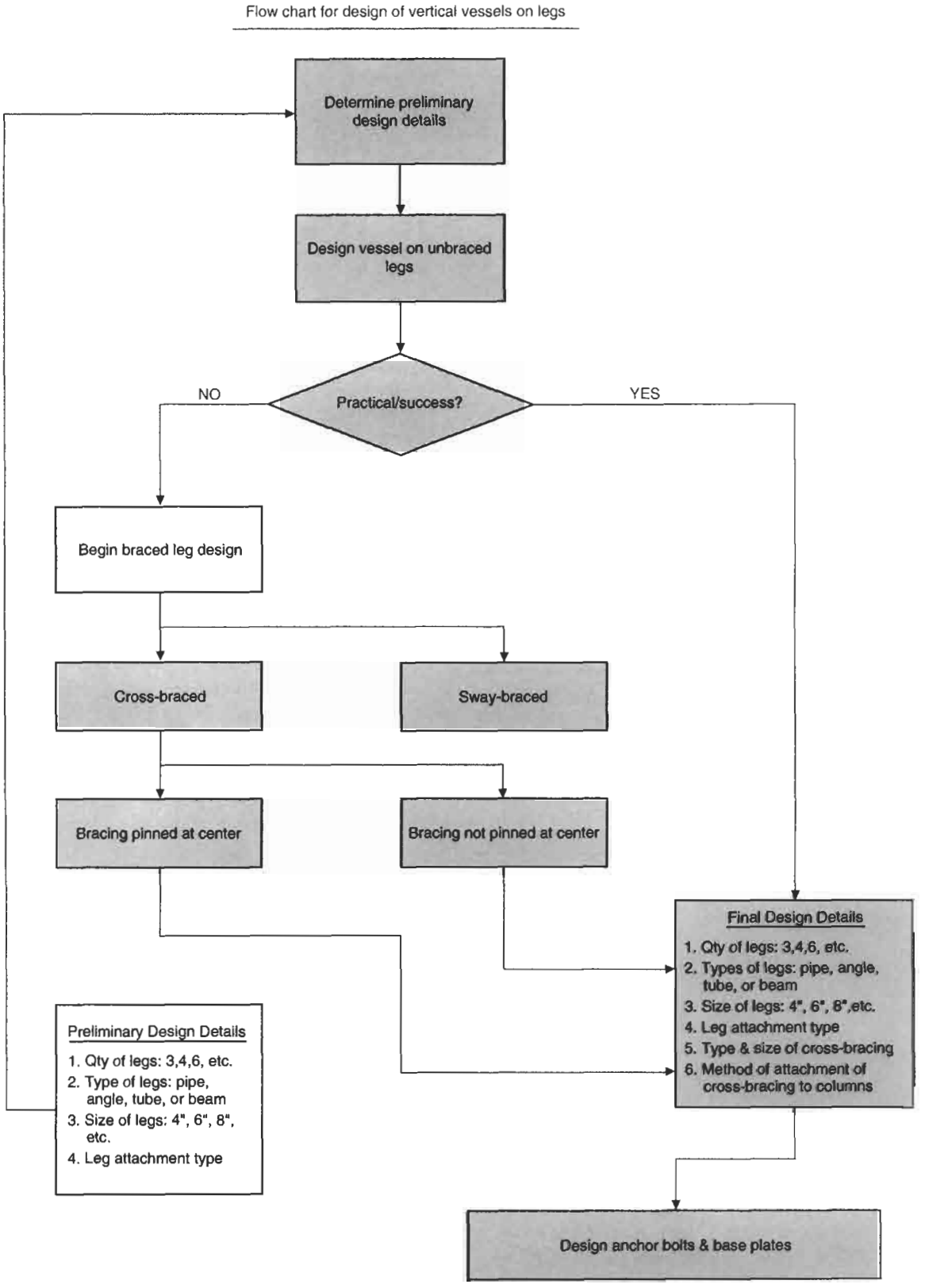

Figure 3-21. Flow chart for design of vertical vessels on legs.

Types of Leg Attachment

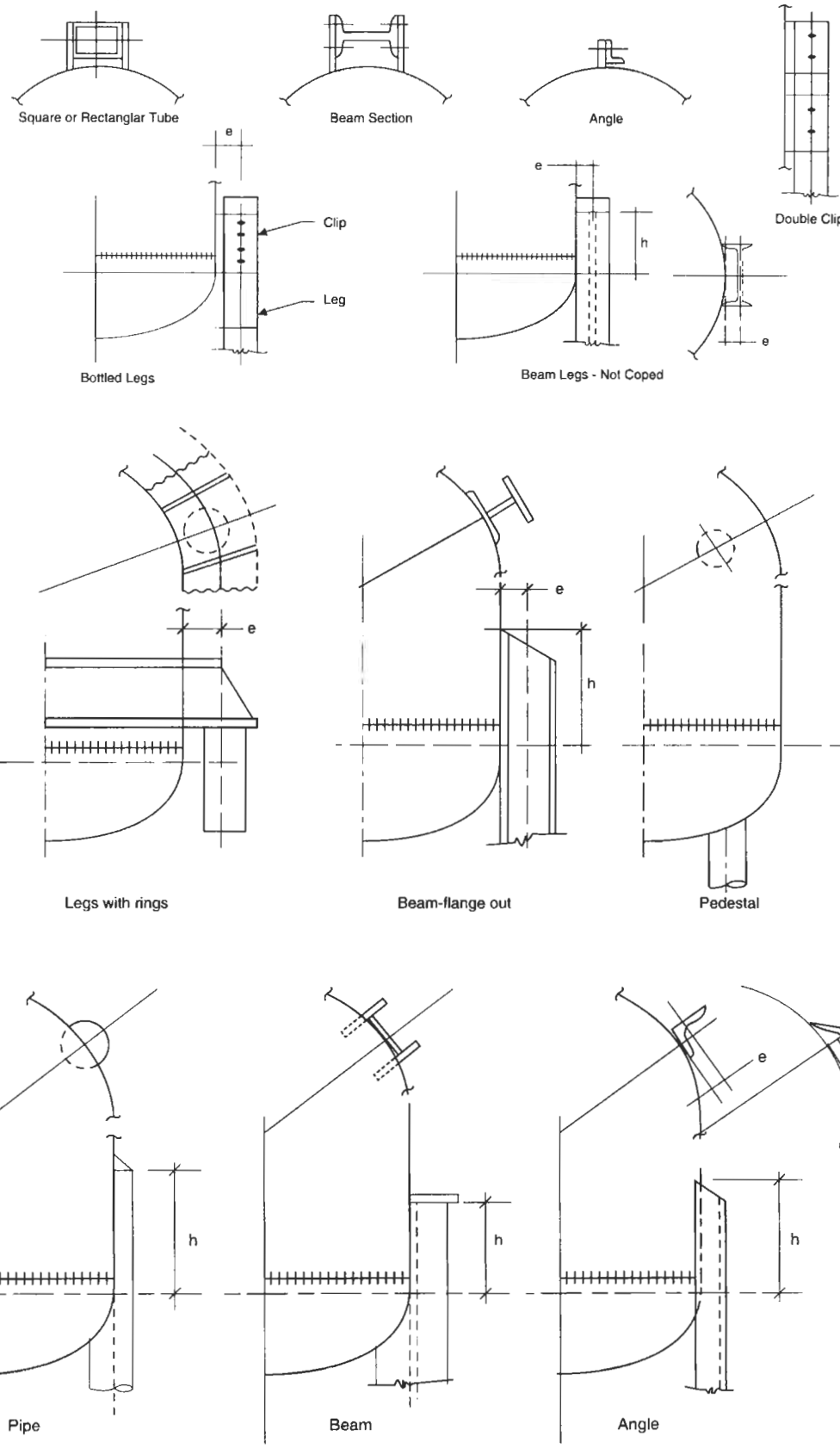

PROCEDURE 3-6

SEISMIC DESIGN—VESSEL ON RINGS [4, 5, 8]

Notation

C_v, C_h = vertical/horizontal seismic factors
A_b = bearing area, in.^{2}
F_v, F_h = vertical/horizontal seismic force, lb
N = number of support points
n = number of gussets at supports
P, P_e = internal/external pressure, psi
W = vessel weight under consideration, lb
σ_b = bending stress, psi
σ_ϕ = circumferential stress, psi
K_r = internal moment coefficient
C_r = internal tension/compression coefficient
Z = required section modulus, ring, in.^{3}
I_{1-2} = moment of inertia of rings, in.^{4}
S = code allowable stress, tension, psi
A_{1-2} = cross-sectional area, ring, in.^{2}
T_C, T_T = compression/tension loads in rings, lb
M = internal moment in rings, in.-lb
M_b = bending moment in base ring, in.-lb, greater of M_x or M_y
B_p = bearing pressure, psi
Q = maximum vertical load at supports, lb
f = radial loads on rings, lb

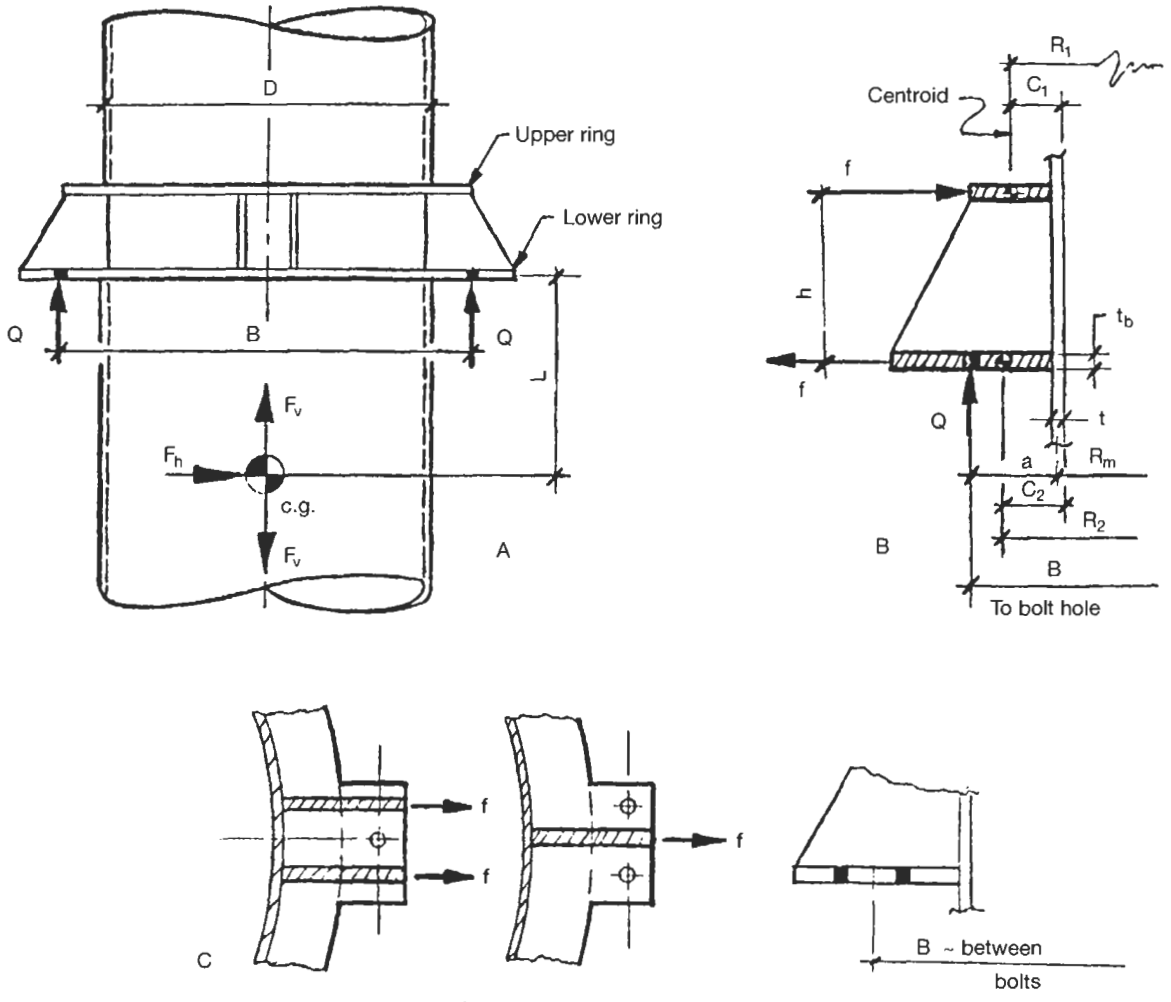

Alternate constructions

Figure 3-22. Typical dimensional data and forces for a vessel supported on rings.

Upper Ring

Moment diagrams shown (typical)

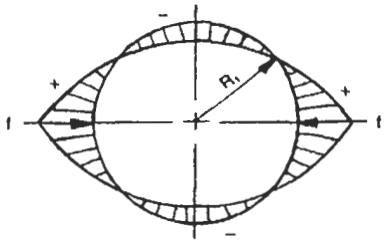

	K_r	C_r
At loads	+0.3183	0
Between loads	−0.1817	−0.5

Lower Ring

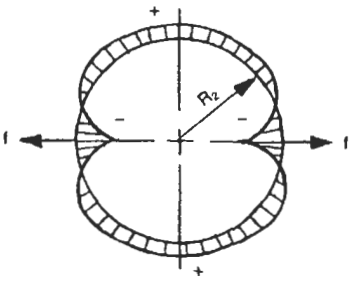

	K_r	C_r
At loads	−.3183	0
Between loads	+.1817	+.5

Two loads

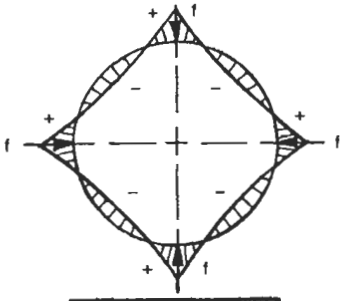

	K_r	C_r
At loads	+0.1366	−0.5
Between loads	− 0.0705	− 0.7071

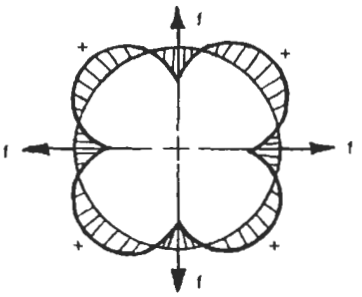

	K_r	C_r
At loads	− 0.1366	+0.5
Between loads	+0.0705	+0.7071

Four loads

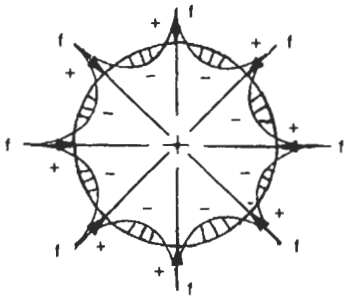

	K_r	C_r
At loads	+0.0661	− 1.2071
Between loads	−0.034	− 1.306

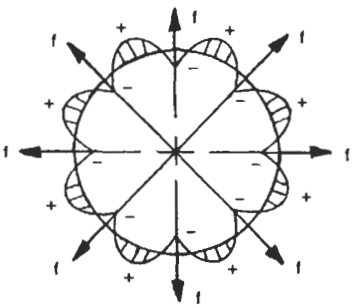

	K_r	C_r
At loads	−0.0661	+1.2071
Between loads	+0.034	+1.306

Eight Loads

Figure 3-23. Coefficients for rings.

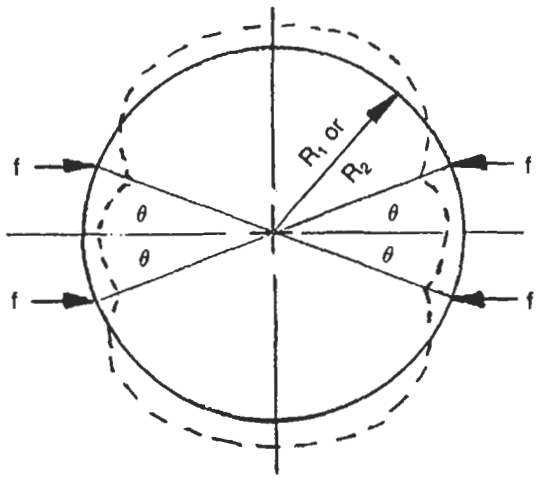

θ	At Loads		Between Loads	
	K_r	C_r	K_r	C_r
1°	+0.619	−0.017	−0.365	−1.00
2°	+0.601	−0.041	−0.366	−0.999
3°	+0.584	−0.052	−0.363	−0.998
4°	+0.566	−0.071	−0.362	−0.997
5°	+0.550	−0.087	−0.360	−0.996
6°	+0.532	−0.105	−0.359	−0.995
7°	+0.515	−0.122	−0.357	−0.992
8°	+0.498	−0.138	−0.355	−0.990
9°	+0.481	−0.155	−0.352	−0.986
10°	+0.466	−0.171	−0.348	−0.985
15°	+0.387	−0.250	−0.329	−0.966
20°	+0.315	−0.321	−0.303	−0.940
25°	+0.254	−0.383	−0.270	−0.906
30°	+0.204	−0.433	−0.229	−0.866
35°	+0.167	−0.469	−0.183	−0.819
40°	+0.144	−0.492	−0.129	−0.766
45°	+0.137	−0.500	−0.070	−0.707

Figure 3-24. Coefficients for rings. (Signs in the table are for loads as shown. Reverse signs for loads are in the opposite direction.)

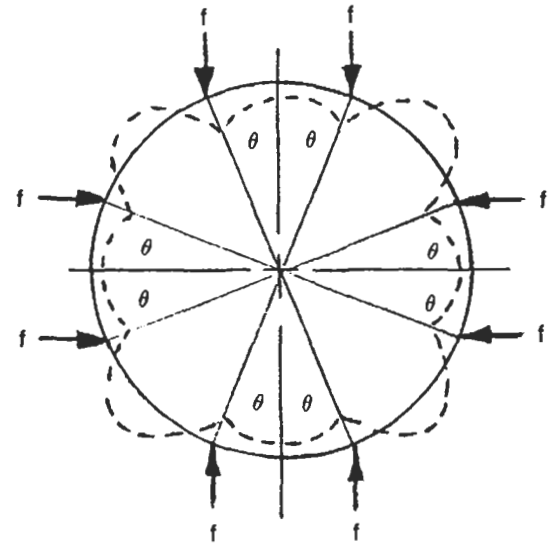

θ	At Loads		Between Loads	
	K_r	C_r	K_r	C_r
1°	+0.254	−1.018	−0.143	−1.411
2°	+0.238	−1.040	−0.143	−1.410
3°	+0.221	−1.050	−0.142	−1.409
4°	+0.206	−1.066	−0.140	−1.408
5°	+0.194	−1.079	−0.136	−1.407
6°	+0.178	−1.095	−0.135	−1.406
7°	+0.165	−1.108	−0.133	−1.405
8°	+0.153	−1.117	−0.130	−1.404
9°	+0.141	−1.130	−0.124	−1.397
10°	+0.130	−1.141	−0.119	−1.393
15°	+0.090	−1.183	−0.093	−1.366
20°	+0.069	−1.204	−0.056	−1.329
25°	+0.069	−1.204	−0.008	−1.282
30°	+0.090	−1.183	+0.049	−1.225
35°	+0.132	−1.141	+0.115	−1.158
40°	+0.194	−1.079	+0.190	−1.083
45°	+0.273	−1.000	+0.273	−1.000

Figure 3-25. Coefficients for rings. (Signs in the table are for loads as shown. Reverse signs for loads are in the opposite direction.)

- *Internal moment in rings, M_1 and M_2.*

  Upper ring:

  $M_1 = k_r f R_1 \cos \theta$

  Lower ring:

  $M_2 = k_r f R_2 \cos \theta$

  Note: cos θ is to be used for nonradial loads. Disregard if load f is radial.

- *Required section modulus of upper ring, Z.*

  $$Z = \frac{M_1}{S}$$

  Note: It is assumed the lower ring is always larger or of equal size to the upper ring.

- *Properties of upper ring.*

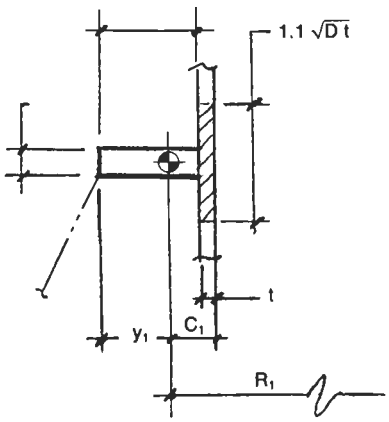

$C_1 = \frac{\Sigma AY}{\Sigma A} =$ $\quad y_1 =$

$I_1 = \Sigma AY^2 + \Sigma I - C_1 \Sigma AY =$

Item	A	Y	Y²	AY	AY²	I
Shell						
Ring						
Σ						

Figure 3-26. Properties of upper ring.

- *Properties of lower ring.*

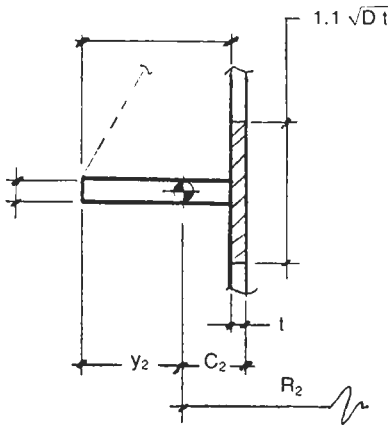

$C_2 = \frac{\Sigma AY}{\Sigma A} =$ $\quad y_2 =$

$I_2 = \Sigma AY^2 + \Sigma I - C_2 \Sigma AY =$

Item	A	Y	Y²	AY	AY²	I
Shell						
Ring						
Σ						

Figure 3-27. Properties of lower ring.

- *Tension/compression loads in rings. Note:* In general the upper ring is in compression at the application of the loads and in tension between the loads. The lower ring is in tension at the loads and in compression between the loads. Since the governing stress is normally at the loads, the governing stresses would be:

  Upper ring:

  $$T_c = C_r f \cos\theta$$

  Lower ring:

  $$T_T = C_r f \cos\theta$$

  where C_r is the maximum positive value for T_T and the maximum negative value for T_c.

- *Maximum circumferential stress in shell, σ_ϕ.*

  Compression: in upper ring

  $$\sigma_\phi = (-)\frac{P_e R_m}{t} - \frac{T_c}{A_1}$$

  Tension: in lower ring

  $$\sigma_\phi = \frac{PR_m}{t} + \frac{T_T}{A_2}$$

- *Maximum bending stress in shell.*

  Upper ring:

  $$\sigma_b = \frac{M_1 C_1}{I_1}$$

  Lower ring:

  $$\sigma_b = \frac{M_2 C_2}{I_2}$$

- *Maximum bending stress in ring.*

  Upper ring:

  $$\sigma_b = \frac{M_1 y_1}{I_1}$$

  Lower ring:

  $$\sigma_b = \frac{M_2 y_2}{I_2}$$

- *Thickness of lower ring to resist bending.*

  Bearing area, A_b:

  $A_b =$

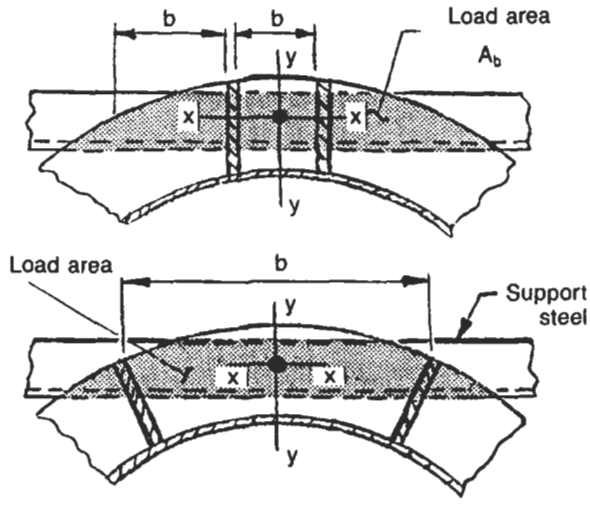

Figure 3-28. Determining the thickness of the lower ring to resist bending.

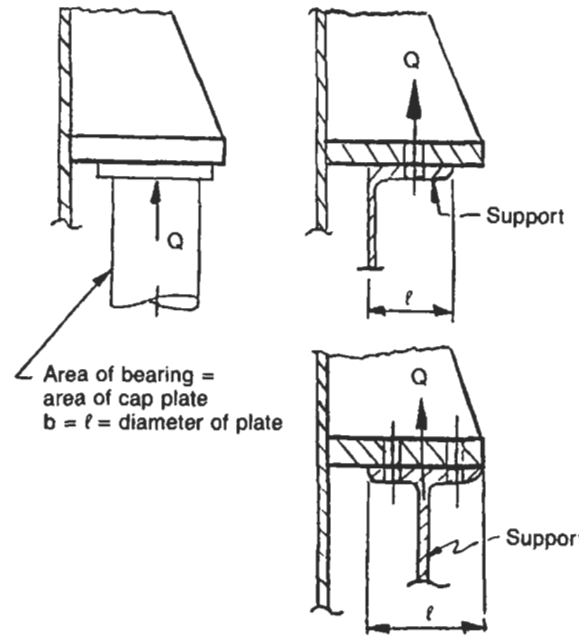

Table 3-15
Maximum Bending Moments in a Bearing Plate With Gussets

$\frac{\ell}{b}$	$M_x\left[\begin{matrix}x=0.5b\\y=\ell\end{matrix}\right]$	$M_y\left[\begin{matrix}x=0.5b\\y=0\end{matrix}\right]$
0	0	$(-)0.500B_p\ell^2$
0.333	$0.0078B_p b^2$	$(-)0.428B_p\ell^2$
0.5	$0.0293B_p b^2$	$(-)0.319B_p\ell^2$
0.666	$0.0558B_p b^2$	$(-)0.227B_p\ell^2$
1.0	$0.0972B_p b^2$	$(-)0.119B_p\ell^2$
1.5	$0.1230B_p b^2$	$(-)0.124B_p\ell^2$
2.0	$0.1310B_p b^2$	$(-)0.125B_p\ell^2$
$3.0-\infty$	$0.1330B_p b^2$	$(-)0.125B_p\ell^2$

Reprinted by permission of John Wiley & Sons, Inc.
From *Process Equipment Design*, Table 10.3. (See Note 2.)

Bearing pressure, B_p:

$$B_p = \frac{Q}{A_b}$$

From Table 3-15, select the equation for the maximum bending moment in the bearing plate. Use the greater of M_x or M_y.

$$\frac{\ell}{b} =$$

$$M_b =$$

Minimum thickness of lower ring, t_b:

$$t_b = \sqrt{\frac{6M_b}{S}}$$

Notes

1. Rings may induce high localized stresses in shell immediately adjacent to rings. For an analysis of these stresses, see Procedure 4-3.
2. When $\ell/b \leq 1.5$, the maximum bending moment occurs at the junction of the ring and shell. When $\ell/b > 1.5$, the maximum bending moment occurs at the middle of the free edge.
3. Since the mean radius of the rings may be unknown at the beginning of computations, yet is required for determining maximum bending moment, substitute R_m as a satisfactory approximation at that stage.
4. The following values may be estimated:

   - *Ring thickness:* The thickness of each ring is arbitrary and can be selected by the designer. A suggested value is

     $$t_b = 0.3\sqrt[3]{\frac{M_{max}}{S}}$$

   - *Ring spacing:* Ring spacing is arbitrary and can be selected by the designer. A suggested minimum value is

     $$h = B - D$$

   - *Ring depth:* The depth of ring cannot be computed directly, but must be computed by successive approximations. As a first trial,

     $$d = 2.1\sqrt{\frac{M_{max}}{t_r S}}$$

PROCEDURE 3-7

SEISMIC DESIGN—VESSEL ON LUGS #1 [5, 8–10]

Notation

C_h = horizontal seismic factor
C_v = vertical seismic factor
F_h = horizontal seismic force, lb
F_v = vertical seismic force, lb
V_h = horizontal shear per lug, lb
V_v = vertical shear per lug, lb
P = internal pressure, psi
R_m = mean radius of shell, in.
W = weight of vessel and contents, lb
t = shell thickness, in.
N = number of lugs
n = number of gussets per lug
K = moment coefficient
F = radial load, lb
f = localized uniform load, lb/in.
Q = vertical load on lug, lb
S = code allowable stress, psi
σ_ϕ = circumferential stress, psi
M_L = longitudinal moment, in.-lb
M = internal bending moment, in.-lb
E = joint efficiency
θ = one-half angle between gussets or top plate, radians

$$\sin\theta = \frac{C}{2R_m} \quad \text{or} \quad \frac{\ell}{2R_m}$$

$$e = 0.78\sqrt{R_m t} \quad \text{but} \quad < 12t$$

Forces and Moments

- *Horizontal force.*

$$F_h = C_h W$$

- *Horizontal shear per lug.*

$$V_h = \frac{F_h}{N}$$

- *Vertical force.*

$$F_v = (1 + C_v)W$$

- *Vertical shear per lug.*

$$V_v = \frac{F_v}{N}$$

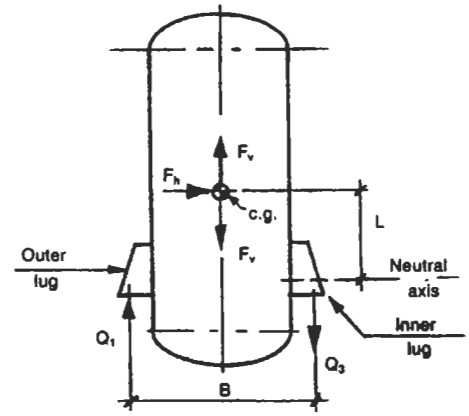

Figure 3-29. Case 1: Lugs below the center of gravity.

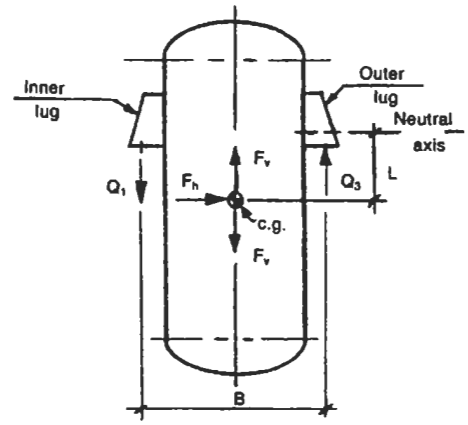

Figure 3-30. Case 2: Lugs above the center of gravity.

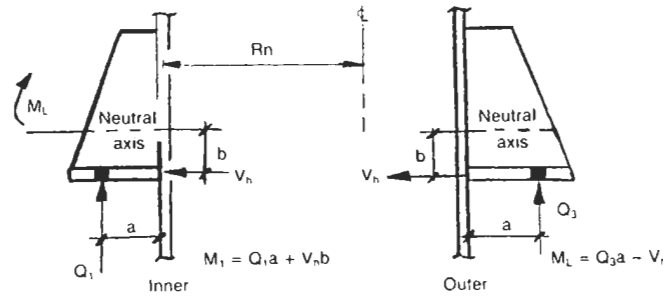

Figure 3-31. Dimensions and forces for support lug.

FORCES AND MOMENTS

	CASE A	CASE B	CASE C
	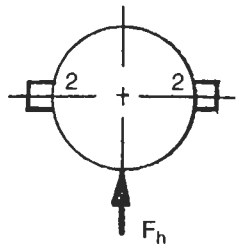	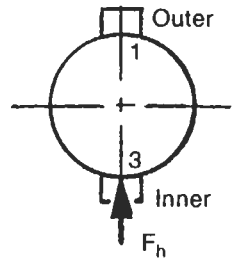	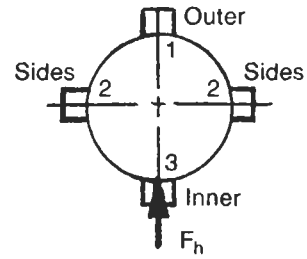
Loads at Lugs, Q			
Outer		$Q_1 = V_v - \frac{F_h L}{B}$	$Q_1 = V_v - \frac{F_h L}{B}$
Side	$Q_2 = V_v$		$Q_2 = V_v$
Inner		$Q_3 = V_v + \frac{F_h L}{B}$	$Q_3 = V_v + \frac{F_h L}{B}$
Moment at Lugs, M_L			
Outer		$M_{L1} = Q_1 a - V_h b$	$M_{L1} = Q_1 a - V_h b$
Side	$M_{L2} = Q_2 a$		$M_{L2} = Q_2 a$
Inner		$M_{L3} = Q_3 a + V_h b$	$M_{L3} = Q_3 a + V_h b$

- *Basic equation for vertical load Q on lugs.*

$$Q = \frac{W}{N} \pm \frac{M_o}{\sigma B}$$

Substituting F_v for W:

$$Q = \frac{F_v}{N} \pm \frac{M_o}{\sigma B}$$

Since $M_o = F_h L$, $V_v = F_v/N$, and $V_h = F_h/N$, the basic equation becomes:

$$Q = V_v \pm \frac{F_h L}{B}$$

Stresses

1. Find the maximum load bending moment, M, due to radial loads on ring from appropriate case of Table 3-18.
2. Add localized stress due to bending to general membrane stress due to pressure:

$$\sigma_\phi = \frac{PR_m}{t} + \frac{6M}{t^2}$$

Note: P is (+) for internal pressure and (−) for external pressure. M is (+) or (−) depending on the direction of load F or the location of the moment in the ring. Allowable tensile stress = 1.5SE. Allowable compressive stress = 1.25S.

Notes

1. Stresses due to radial loads are determined for a second of shell, 1 in. in length (thus the "ring" analogy). The bending stresses are a result of this "ring" absorbing the radial loads.
2. Assume effects of radial loads as additive to those due to internal pressure, even though the loadings may be in the opposite directions. Although conservative, they will account for the high discontinuity stresses immediately adjacent to the lugs.
3. In general, the smaller the diameter of the vessel, the further the distribution of stresses in the circumferential direction. In small diameter vessels, the longitudinal stresses are confined to a narrow band (approximately 2 in. for a 24-in.-diameter vessel). The opposite becomes true for larger-diameter vessels or larger R_m/t ratios.

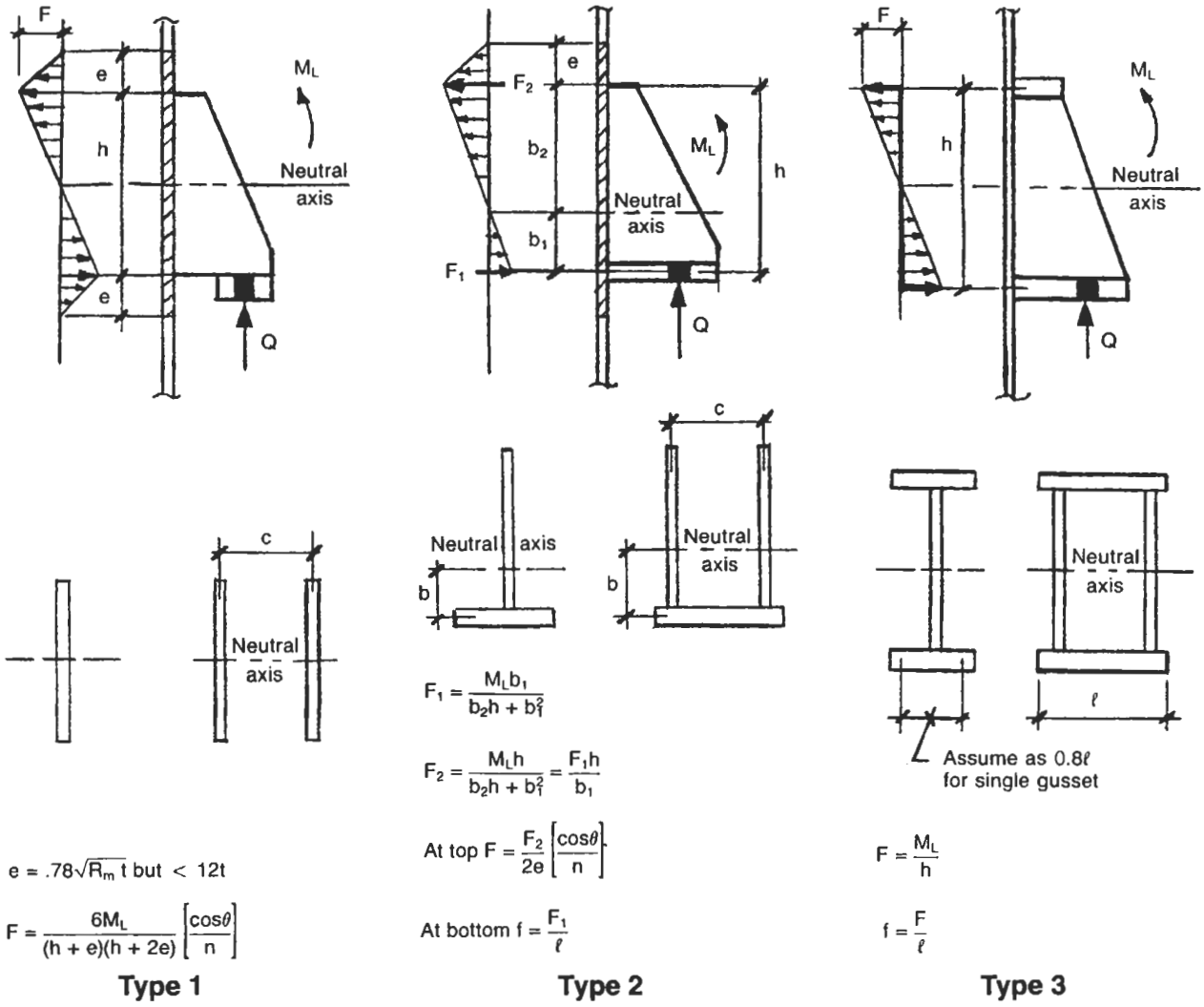

Figure 3-32. Radial loads F and f.

4. This procedure utilizes strain-energy concepts and assumes all loads are in the plane of the ring and that the ring is of uniform cross section.
5. This procedure ignores effects of sliding friction between lugs and supporting structure during heat-up and cool-down cycles. Effects will be negligible for small-diameter vessels or low temperatures or where slide plates are used to reduce frictional forces.
6. No credit has been taken for stiffness due to proximity of lugs to heads or stiffening rings; however, such location may be advantageous.
7. There is no difference between Cases 1 and 2, except that lugs designated as "inner" and "outer" would technically be reversed.
8. Effects of operating contents of vessel may be significant for locating lugs. The location of the c.g. for empty, half-full, and full may vary considerably, thus affecting the lever arm of the applied forces.
9. If shell stresses are excessive, the following methods may be utilized to reduce the stresses:

- Add more lugs.
- Add more gussets.
- Increase angle θ between gussets.
- Increase height of lugs, h.
- Add reinforcing pads under lugs. (See Procedure 3-8.)
- Increase thickness of shell course to which lugs are attached.
- Add top and bottom plates to lugs or increase width of plates.
- Add circumferential ring stiffeners at top and bottom of lugs. (See Procedure 3-6.)

Table 3-16
Equation for Bending Moment, M

TWO-LUG SYSTEM	Single Gusset	No Comp. PL	$M_F = \frac{FR_m}{\pi} = 0.3183FR_m =$ $M_{90} = -0.1817FR_m =$ Source: [8]
		w/ Compression PL	$M_c = \frac{fR_m^2}{2}\left[\frac{3\ \sin\theta\cos\theta + 2\theta\sin^2\theta + \theta}{\pi} - \sin^2\theta\right] =$ $M_{90} = \frac{-fR_m^2}{2}\left[\frac{3\sin\theta\cos\theta + 2\theta\sin^2\theta + \theta}{\pi} - 2\sin\theta + \sin^2\theta\right] =$ Source: [9]
	Two Gussets	No Comp. PL	$M_c = FR_m\left[\frac{\cos\theta + \theta\sin\theta}{\pi} - \frac{\sin\theta}{2}\right] =$ $M_F = FR_m\left[\frac{\phi\sin\phi + \cos\phi - \theta\sin\theta - \cos\theta}{\pi} - \sin\phi + \sin\theta\right] =$ $M_{90} = FR_m\left[\frac{\phi\sin\phi + \cos\phi - \theta\sin\theta - \cos\theta}{\pi} + 1 - \sin\phi\right] =$ $M_c, M_F, M_{90} = FR_mK$ (see Figure 3-33) = Source: [8]
FOUR-LUG SYSTEM	Single Gusset	No Comp. PL	$M_F = 0.1366FR_m =$ $M_{45} = 0 - .0705FR_m =$ Source: [15]
		w/ Compression PL	$M_c = \frac{fR_m^2}{2}\left[\frac{6\sin\theta\cos\theta + 4\theta\sin^2\theta + 2\theta}{\pi} - \sin^2 - 2\sin\theta\right] =$ $M_{45} = \frac{-fR_m^2}{2}\left[\frac{6\sin\theta\cos\theta + 4\theta\sin^2\theta + 2\theta}{\pi} + \sin\theta\left(1 - \sqrt{2}\right) - \sqrt{2}\right] =$ Source: [9]
	Two Gussets	No Comp. PL	$M_c = 2FR_m\left[2\left(\frac{\cos\theta + \theta\sin\theta}{\pi}\right) - \frac{\sin\theta}{2} - \frac{1}{2}\right] =$ EQ10.85 $M_F = M_c + FR_m(1 - \cos\theta) =$ EQ10.80 $M_{45} = M_c + FR_m(1 - \cos 45^\circ) - FR_m(\sin 45^\circ - \sin\theta) =$ EQ10.82 $M_c, M_F, M_{45} = FR_mK$ (see Figure 3-34) = Source: [5]

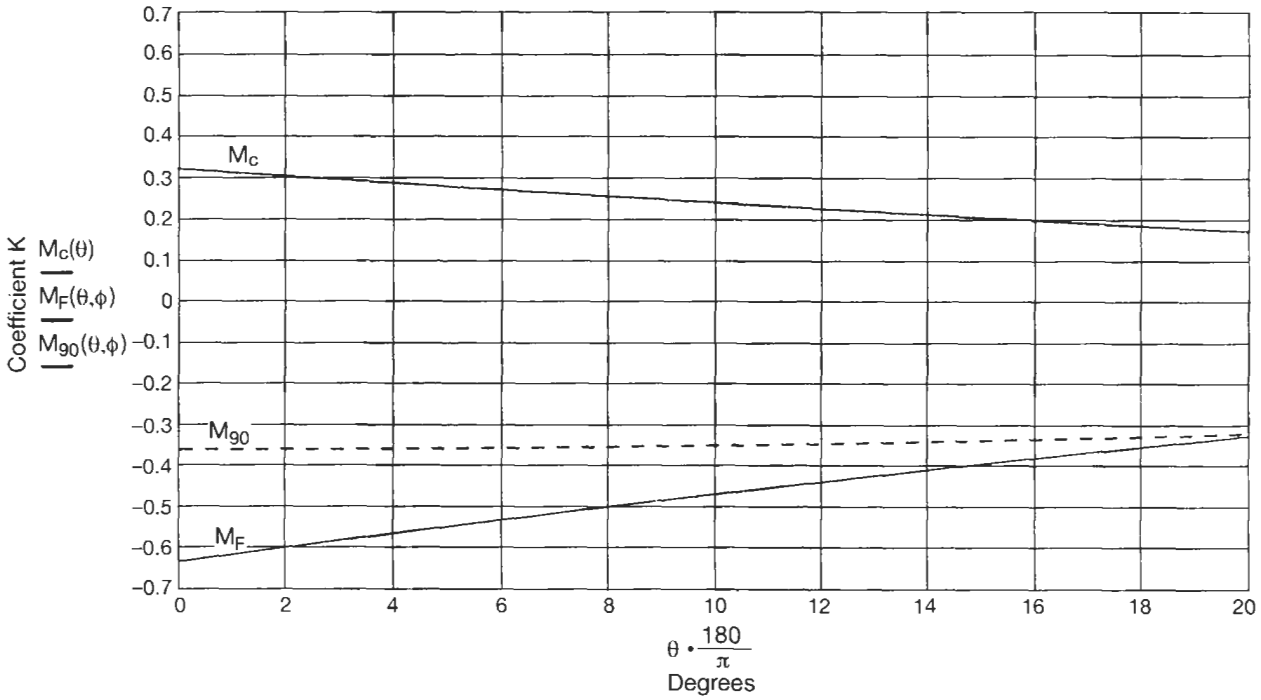

Figure 3-33. Two-lug system.

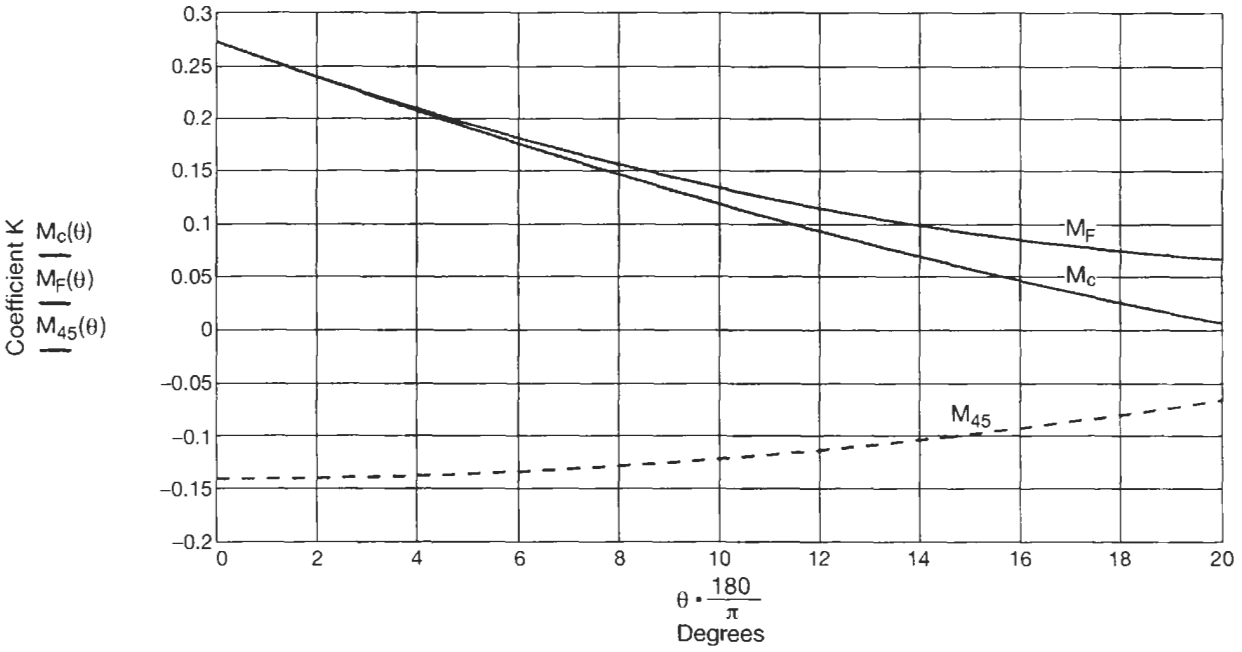

Figure 3-34. Four-lug system.

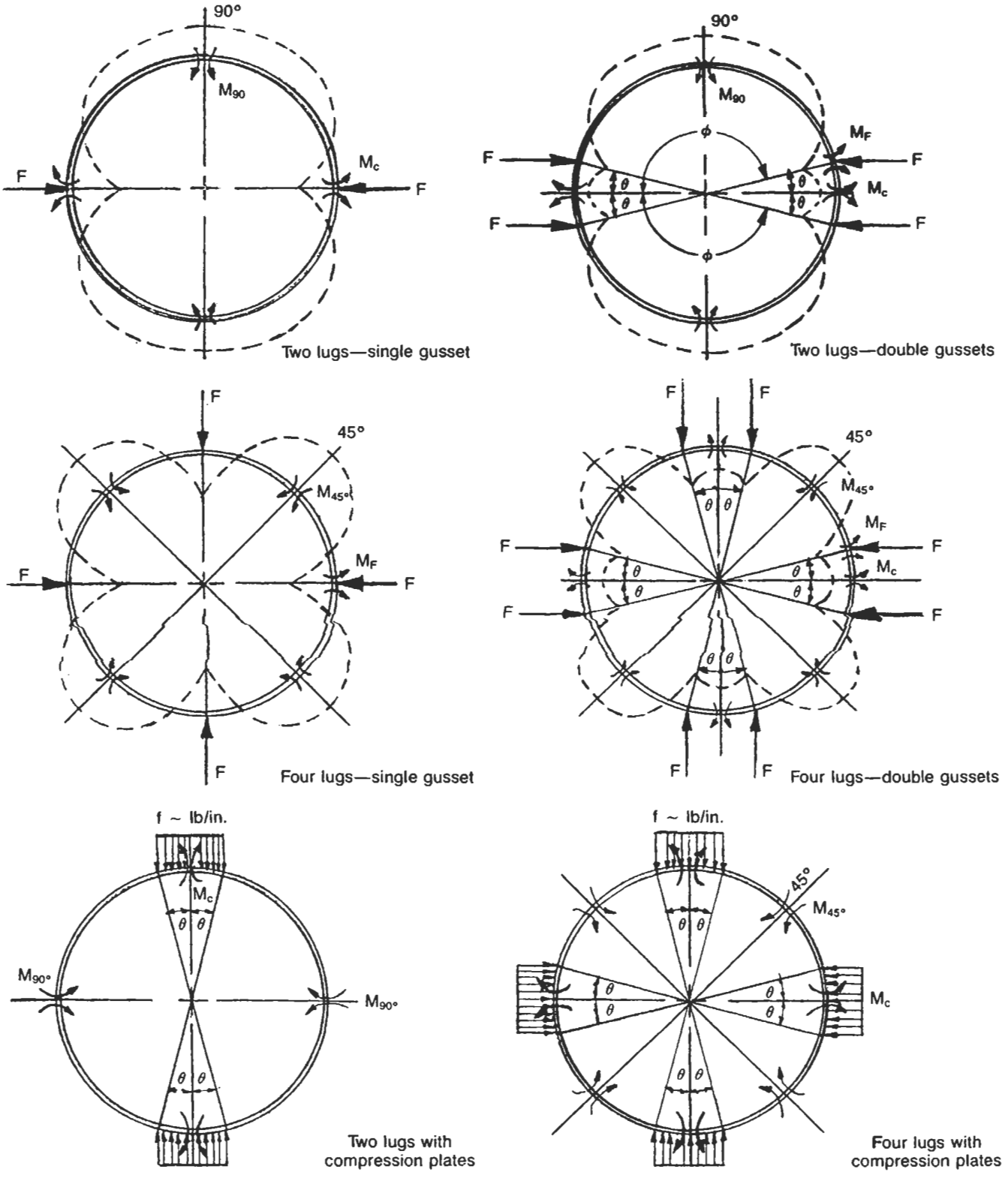

Figure 3-35. Stress diagrams.

PROCEDURE 3-8

SEISMIC DESIGN—VESSEL ON LUGS #2 [11–13]

Notation

R_m = center line radius of shell, in.
N = number of equally spaced lugs
W = weight of vessel + contents, lb
f = radial load, lb
F_h = horizontal seismic force, lb
F_v = vertical seismic force, lb
V_h = horizontal shear per lug, lb
V_v = vertical shear per lug, lb
Q = vertical load on lugs, lb
γ, β = coefficients
M_c = external circumferential moment, in.-lb
M_L = external longitudinal moment, in.-lb
M_ϕ = internal bending moment, circumferential, in.-lb/in.
M_x = internal bending moment, longitudinal, in.-lb/in.
N_ϕ = membrane force in shell, circumferential, lb/in.
N_x = membrane force in shell, longitudinal, lb/in.
P = internal pressure, psi
C_h = horizontal seismic factor
C_v = vertical seismic factor
C_c,C_L = multiplication factors for N_ϕ and N_x for rectangular attachments
K_c,K_L = coefficients for determining β for moment loads on rectangular areas
K_1,K_2 = coefficients for determining β for radial loads on rectangular areas
K_n,K_b = stress concentration factors (see Note 5)
σ_ϕ = circumferential stress, psi
σ_x = longitudinal stress, psi
t_s = thickness of shell, in.
t_p = thickness of reinforcing pad, in.

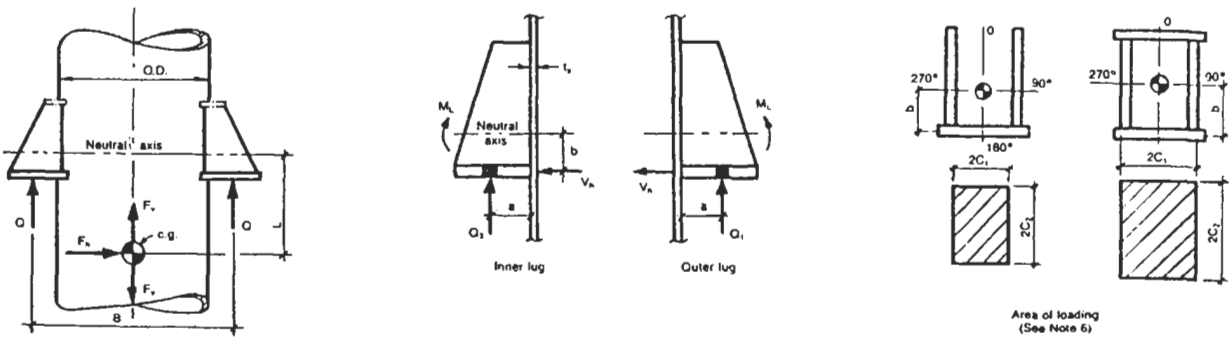

Figure 3-36. Typical dimensional data, forces, and load areas for a vertical vessel supported on lugs.

Step 1: Compute forces and moments.

FORCES			
Lateral force	$F_h = C_h W$		
Horizontal shear per lug	$V_h = F_{h/N}$		
Vertical force	$F_v = (1 + C_v)W$		
Vertical shear per lug	$V_v = F_v/N$		
LOAD DIAGRAMS			
	Case 1: Two Lugs	**Case 2: Two Lugs**	**Case 3: Four Lugs**
	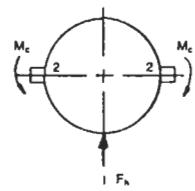	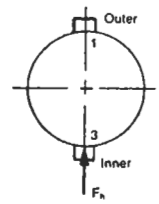	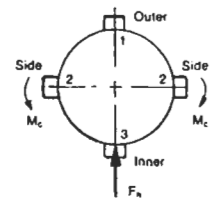
VERTICAL LOADS AT LUGS, Q			
Outer		$Q_1 = V_v - \frac{F_h L}{B}$	$Q_1 = V_v - \frac{F_h L}{B}$
Sides	$Q_2 = V_V$		$Q_2 = V_V$
Inner		$Q_3 = V_v + \frac{F_h L}{B}$	$Q_3 = V_v + \frac{F_h L}{B}$
LONGITUDINAL MOMENT, M_L			
Outer		$M_{L1} = Q_1 a - V_h b$	$M_{L1} = Q_1 a - V_h b$
Sides	$M_{L2} = Q_2 a$		$M_{L2} = Q_2 a$
Inner		$M_{L3} = Q_3 a + V_h b$	$M_{L3} = Q_3 a + V_h b$
CIRCUMFERENTIAL MOMENT, M_c			
Sides	$M_c = V_h a$		$M_c = V_h a$

Step 2: Compute geometric parameters.

$\gamma = R_m/t$	$\beta_1 = C_1/R_m$	$\beta_2 = C_2/R_m$	β_1/β_2

Step 3: Compute equivalent β values (values of C_L, C_C, K_L, and K_C from Tables 3-17 and 3-18).

β Values for Longitudinal Moment

Values of β		C_L	K_L	β
$\beta_a = \sqrt[3]{\beta_1 \beta_2^2}$	N_ϕ			
$\beta_b = \sqrt[3]{\beta_1 \beta_2^2}$	N_x			
$\beta_c = K_L \sqrt[3]{\beta_1 \beta_2^2}$	M_ϕ			
$\beta_d = K_L \sqrt[3]{\beta_1 \beta_2^2}$	M_x			

β Values for Circumferential Moment

Values of β		C_c	K_c	β
$\beta_e = \sqrt[3]{\beta_1^2 \beta_2}$	N_ϕ			
$\beta_f = \sqrt[3]{\beta_1^2 \beta_2}$	N_x			
$\beta_g = K_c \sqrt[3]{\beta_1^2 \beta_2}$	M_ϕ			
$\beta_h = K_c \sqrt[3]{\beta_1^2 \beta_2}$	M_x			

Step 4: Compute stresses.

Forces	Figure	β	Values from Figure	Forces and Moments	Stress
			Longitudinal Moment		
Membrane	5-24A	$\beta_a =$	$\frac{N_\phi R_m^2 \beta}{M_L} = (\ )$	$N_\phi = \frac{(\ )C_L M_L}{R_m^2 \beta} =$	$\sigma_\phi = \frac{K_n N_\phi}{t_s} =$
	5-24B	$\beta_b =$	$\frac{N_x R_m^2 \beta}{M_L} = (\ )$	$N_x = \frac{(\ )C_L M_L}{R_m^2 \beta} =$	$\sigma_x = \frac{K_n N_x}{t_s} =$
Bending	5-25A	$\beta_c =$	$\frac{M_\phi R_m \beta}{M_L} = (\ )$	$M_\phi = \frac{(\ )M_L}{R_m \beta} =$	$\sigma_\phi = \frac{6K_b M_\phi}{t_s^2} =$
	5-25B	$\beta_d =$	$\frac{M_x R_m \beta}{M_L} = (\ )$	$M_x = \frac{(\ )M_L}{R_m \beta} =$	$\sigma_x = \frac{6K_b M_x}{t_s^2} =$
			Circumferential Moment		
Membrane	5-26A	$\beta_e =$	$\frac{N_\phi R_m^2 \beta}{M_c} = (\ )$	$N_\phi = \frac{(\ )C_c M_c}{R_m^2 \beta} =$	$\sigma_\phi = \frac{K_n N_\phi}{t_s} =$
	5-26B	$\beta_f =$	$\frac{N_x R_m^2 \beta}{M_c} = (\ )$	$N_x = \frac{(\ )C_c M_c}{R_m^2 \beta} =$	$\sigma_x = \frac{K_n N_x}{t_s} =$
Bending	5-27A	$\beta_g =$	$\frac{M_\phi R_m \beta}{M_c} = (\ )$	$M_\phi = \frac{(\ )M_c}{R_m \beta} =$	$\sigma_\phi = \frac{6K_b M_\phi}{t_s^2} =$
	5-27B	$\beta_h =$	$\frac{M_x R_m \beta}{M_c} = (\ )$	$M_x = \frac{(\ )M_c}{R_m \beta} =$	$\sigma_x = \frac{6K_b M_x}{t_s^2} =$

Table 3-17
Coefficients for Circumferential Moment, M_c

β_1/β_2	γ	C_c for N_ϕ	C_c for N_x	K_c for M_ϕ	K_c for M_x
0.25	15	0.31	0.49	1.31	1.84
	50	0.21	0.46	1.24	1.62
	100	0.15	0.44	1.16	1.45
	200	0.12	0.45	1.09	1.31
	300	0.09	0.46	1.02	1.17
0.5	15	0.64	0.75	1.09	1.36
	50	0.57	0.75	1.08	1.31
	100	0.51	0.76	1.04	1.16
	200	0.45	0.76	1.02	1.20
	300	0.39	0.77	0.99	1.13
1	15	1.17	1.08	1.15	1.17
	50	1.09	1.03	1.12	1.14
	100	0.97	0.94	1.07	1.10
	200	0.91	0.91	1.04	1.06
	300	0.85	0.89	0.99	1.02
2	15	1.70	1.30	1.20	0.97
	50	1.59	1.23	1.16	0.96
	100	1.43	1.12	1.10	0.95
	200	1.37	1.06	1.05	0.93
	300	1.30	1.00	1.00	0.90
4	15	1.75	1.31	1.47	1.08
	50	1.64	1.11	1.43	1.07
	100	1.49	0.81	1.38	1.06
	200	1.42	0.78	1.33	1.02
	300	1.36	0.74	1.27	0.98

Reprinted by permission of the Welding Research Council.

Table 3-18
Coefficients for Longitudinal Moment, M_L

β_1/β_2	γ	C_L for N_ϕ	C_L for N_x	K_L for M_ϕ	K_L for M_x
0.25	15	0.75	0.43	1.80	1.24
	50	0.77	0.33	1.65	1.16
	100	0.80	0.24	1.59	1.11
	200	0.85	0.10	1.58	1.11
	300	0.90	0.07	1.56	1.11
0.5	15	0.90	0.76	1.08	1.04
	50	0.93	0.73	1.07	1.03
	100	0.97	0.68	1.06	1.02
	200	0.99	0.64	1.05	1.02
	300	1.10	0.60	1.05	1.02
1	15	0.89	1.00	1.01	1.08
	50	0.89	0.96	1.00	1.07
	100	0.89	0.92	0.98	1.05
	200	0.89	0.99	0.95	1.01
	300	0.95	1.05	0.92	0.96
2	15	0.87	1.30	0.94	1.12
	50	0.84	1.23	0.92	1.10
	100	0.81	1.15	0.89	1.07
	200	0.80	1.33	0.84	0.99
	300	0.80	1.50	0.79	0.91
4	15	0.68	1.20	0.90	1.24
	50	0.61	1.13	0.86	1.19
	100	0.51	1.03	0.81	1.12
	200	0.50	1.18	0.73	0.98
	300	0.50	1.33	0.64	0.83

Reprinted by permission of the Welding Research Council.

Analysis When Reinforcing Pads Are Used

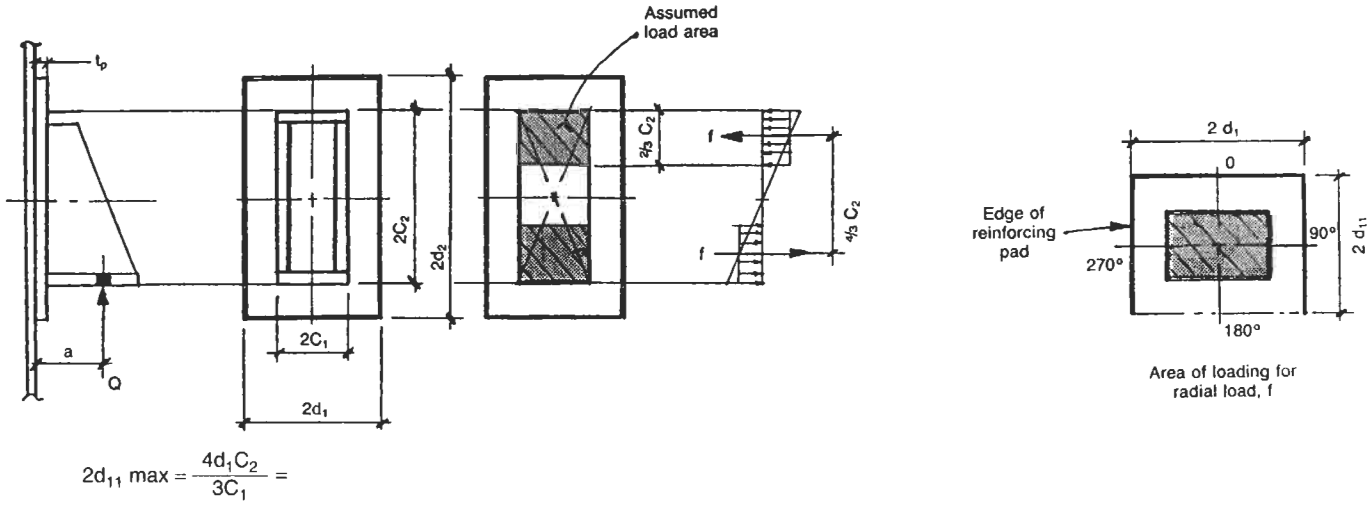

Figure 3-37. Dimensions of load areas for radial loads.

Step 1: Compute radial loads f.

	Case 1	Case 2	Case 3
Outer		$f_1 = \frac{3M_{L1}}{4C_2}$	$f_1 = \frac{3M_{L1}}{4C_2}$
Sides	$f_2 = \frac{3M_{L2}}{4C_2}$		$f_2 = \frac{3M_{L2}}{4C_2}$
Inner		$f_3 = \frac{3M_{L3}}{4C_2}$	$f_3 = \frac{3M_{L3}}{4C_2}$

Step 2: Compute geometric parameters.

At Edge of Attachment		At Edge of Pad	
$R_m = \frac{I.D. + t_s + t_p}{2}$		$R_m = \frac{I.D. + t_s}{2}$	
$t = \sqrt{t_s^2 + t_p^2}$		$t = t_s$	
$\gamma = R_m/t$		$\gamma = R_m/t$	
$\beta_1 = C_1/R_m$		$\beta_1 = d_1/R_m$	
$\beta_2 = 4C_2/3R_m$		$\beta_2 = d_n/R_m$	
β_1/β_2		β_1/β_2	

Step 3: Compute equivalent β values.

Four values of β are computed for use in determining N_ϕ, N_x, M_ϕ, and M_x as follows. The values of K_1 and K_2 are taken from Table 3-21.

$\beta_1/\beta_2 \geq 1$	β
$\beta = \left[1 - \frac{1}{3}\left(\frac{\beta_1}{\beta_2} - 1\right)(1 - k_1)\right]\sqrt{\beta_1\beta_2}$	β_a for N_ϕ = β_b for N_x =
$\beta_1/\beta_2 < 1$	
$\beta = \left[1 - \frac{4}{3}\left(1 - \frac{\beta_1}{\beta_2}\right)(1 - k_2)\right]\sqrt{\beta_1/\beta_2}$	β_c for M_ϕ = β_d for M_x =

Table 3-19
Values of Coefficient K_1 and K_2

	K_1	K_2
N_ϕ	0.91	1.48
N_x	1.68	1.2
M_ϕ	1.76	0.88
M_x	1.2	1.25

Reprinted by permission of the Welding Research Council.

Step 4: Compute stresses for a radial load.

Radial Load	Figure	β	Values from Figure	Forces and Moments	Stress
Membrane	5-22A	β_a =	$\frac{N_\phi R_m}{f} = (\ )$	$N_\phi = \frac{(\ )f}{R_m} =$	$\sigma_\phi = \frac{K_n N_\phi}{t} =$
	5-22B	β_b =	$\frac{N_x R_m}{f} = (\ )$	$N_x = \frac{(\ )f}{R_m} =$	$\sigma_x = \frac{K_n N_x}{t} =$
Bending	5-23A	β_c =	$\frac{M_\phi}{f} = (\ )$	$M_\phi = (\ )f =$	$\sigma_\phi = \frac{6K_b M_\phi}{t^2} =$
	5-23B	β_d =	$\frac{M_x}{f} = (\ )$	$M_x = (\ )f =$	$\sigma_x = \frac{6K_b M_x}{t^2} =$

COMBINING STRESSES

WITHOUT REINFORCING PAD

Stress Due To			σ_x				σ_ϕ			
			0°	90°	180°	270°	0°	90°	180°	270°
Longitudinal moment, M_L	Membrane	N_ϕ					+		−	
		N_x	+		−					
	Bending	M_ϕ					+		−	
		M_x	+		−					
Circumferential moment, M_c	Membrane	N_ϕ						+		−
		N_x		+		−				
	Bending	M_ϕ						+		−
		M_x		+		−				
Internal pressure, P	$\sigma_\phi = \frac{PR_m}{t_s}$						+	+	+	+
	$\sigma_x = \frac{PR_m}{2t_s}$		+	+	+	+				
Total	$\sum$									

WITH REINFORCING PAD

Stress Due To			σ_x				σ_ϕ			
			0°	90°	180°	270°	0°	90°	180°	270°
Radial load, f	Membrane	N_ϕ					+	+	+	+
		N_x	+	+	+	+				
	Bending	M_ϕ					+	+	+	+
		M_x	+	+	+	+				
Internal pressure, P	$\sigma_\phi = \frac{PR_m}{t_s}$						+	+	+	+
	$\sigma_x = \frac{PR_m}{2t_s}$		+	+	+	+				
Total	$\sum$		+	+	+	+	+	+	+	+

NOTES

1. Make sure to remain consistent by lug, that is, that all loadings are from the same lug. This may require several trials to determine the worst case.
2. The calculations for combining stresses with a reinforcing pad should be completed for stresses at the edge of attachment as well as at the edge of the pad. For thinner shells the stress at the edge of the pad will usually govern.

Notes

1. A change in location of the c.g. for various operating levels can greatly affect the moment at lugs by increasing or decreasing the "L" dimension. Different levels and weights should be investigated for determining worst case (i.e., full, half-full, empty, etc.)
2. This procedure ignores effects of sliding friction between lugs and beams during heating/cooling cycles. These effects will be negligible for small-diameter vessels, relatively low operating temperatures, or where slide plates are used to reduce friction forces. Other cases should be investigated.
3. Since vessels supported on lugs are commonly located in structures, it is assumed that earthquake effects will be dependent on the structure and not on the vessel. Thus equivalent horizontal and vertical loads must be provided rather than applying UBC seismic factors. See Procedure 3-3.
4. If reinforcing pads are used to reduce stresses in the shell or a design that uses them is being checked, then Bijlaard recommends an analysis that converts moment loadings into equivalent radial loads. The attachment area is reduced about two-thirds. Stresses at the edge of load area and stresses at the edge of the pad must be checked. See "Analysis When Reinforcing Pads are Used."
5. Stress concentration factors are found in Procedure 5-5.
6. To determine the area of attachment, see "Attachment Parameters." Please note that if a top (compression) plate is not used, then an equivalent rectangle that is equal to the moment of inertia of the attachment and whose width-to-height ratio is the same must be determined. The neural axis is the rotating axis of the lug passing through the centroid.
7. Stiffening effects due to proximity to major stiffening elements, though desirable, have been neglected in this procedure.

PROCEDURE 3-9

SEISMIC DESIGN—VESSEL ON SKIRT [1, 2, 4]

Notation

T = period of vibration, sec
S_1 = code allowable stress, tension, psi
H = overall height of vessel from bottom of base plate, ft
h_x = height from base to center of section or c.g. of a concentrated load, ft
h_i = height from base to plane under consideration, ft
α, β, γ = coefficients from Table 3-20 for given plane based on h_x/H
W_x = total weight of section, kips
W = weight of concentrated load or mass, kips
W_o = total weight of vessel, operating, kips
W_h = total weight of vessel above the plane under consideration, kips
w_x = uniformly distributed load for each section, kips/ft
F_t = portion of seismic force applied at the top of the vessel, kips
F_x = lateral force applied at each section, kips
V = base shear, kips
V_x = shear at plane x, kips
M_x = moment at plane x, ft-kips
M_b = overturning moment at base, ft-kips
D = mean shell diameter of each section, ft or in.
E = modulus of elasticity at design temperature, 10^6 psi
E_1 = joint efficiency
t = thickness of vessel section, in.
P_i = internal design pressure, psi
P_e = external design pressure, psi
$\Delta\alpha$, $\Delta\gamma$ = difference in values of α and γ from top to bottom of any given section
l_x = length of section, ft
σ_{xt} = longitudinal stress, tension, psi
σ_{xc} = longitudinal stress, compression, psi
R_o = outside radius of vessel at plane under consideration, in.
A = code factor for determining allowable compressive stress, B
B = code allowable compressive stress, psi
F = lateral seismic force for uniform vessel, kips
C_h = horizontal seismic factor (see Procedure 3-3)

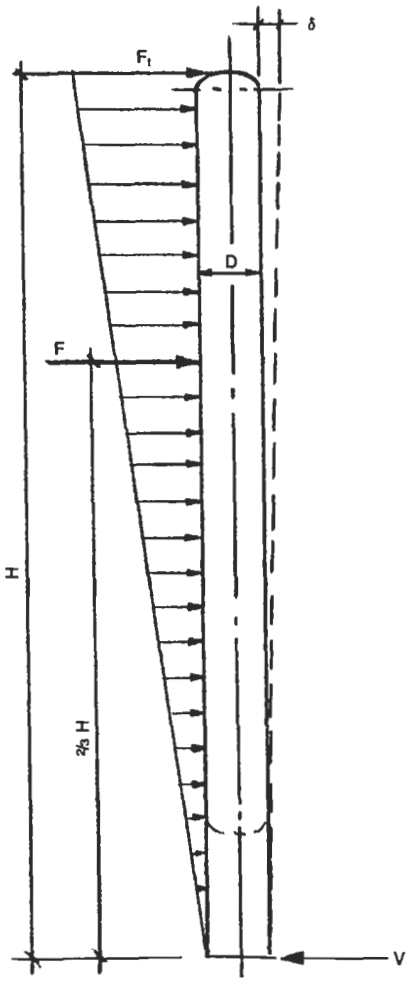

Figure 3-38. Typical dimensional data, forces, and loadings on a uniform vessel supported on a skirt (δ = deflection).

Cases

Case 1: Uniform Vessels

For vessels of uniform cross section without concentrated loads (i.e., reboilers, packing, large liquid sections, etc.) weight can be assumed to be uniformly distributed over the entire height.

$W_o =$

$H =$

$D =$

$t =$

$$T = 0.0000265\left(\frac{H}{D}\right)^2\sqrt{\frac{W_o D}{Ht}}$$

Note: P.O.V. may be determined from chart in Figure 3-9. H and D are in feet; t is in inches.

$V = C_h W_o$ (from Procedure 3-3)

$F_t = 0.07TV$ or $0.25V$

whichever is less

Note: If $H/D \leq 3$ or $T \leq 0.7$ sec, then $F_t = 0$

$$F = V - F_t$$

$$M_b = F_t H + \tfrac{2}{3}(FH)$$

Moment at any height h_i

$$M_x = F_t(H - h_i) + F\left(\frac{2H}{3} - h_i\right)$$

Case 2: Nonuniform Vessels

Procedure for finding period of vibration, moments, and forces at various planes for nonuniform vessels. A "nonuniform" vertical vessel is one that varies in diameter, thickness, or weight at different elevations. This procedure distributes the seismic forces and thus base shear, along the column in proportion to the weights of each section. The results are a more accurate and realistic distribution of forces and accordingly a more accurate period of vibration. The procedure consists of two main steps:

Step 1: *Determination of period of vibration (P.O.V.), T.* Divide the column into sections of uniform weight and diameter not to exceed 20% of the overall height. A uniform weight is calculated for each section. Diameter and thicknesses are taken into account through factors α and γ. Concentrated loads are handled as separate sections and not combined with other sections. Factor β will proportion effects of concentrated loads. The calculation form is completed for each section from left to right, then totaled to the bottom. These totals are used to determine T (P.O.V.) and the P.O.V. in turn is used to determine V and F_t.

Step 2: *Determination of forces, shears, and moments.* Again, the vessel is divided into major sections as in Step 1; however, longer sections should be further subdivided into even increments. For these calculations, sections should not exceed 10% of height. Remember, the moments and weights at each plane will be used in determining what thicknesses are required. It is convenient to work in 8 to 10 foot increments to match shell courses. Piping, trays, platforms, insulation, fireproofing, and liquid weights should be added into the weights of each section

where they occur. Overall weights of sections are used in determining forces, not uniform weights. Moments due to eccentric loads are added to the overall moment of the column.

Notes for nonuniform vessels

1. Combine moments with corresponding weights at each section and use allowable stresses to determine required shell and skirt thicknesses at the elevation.
2. $\sum \omega \, \Delta\alpha$ and $W\beta/H$ are separate totals and are combined in computation of P.O.V.
3. $(D/10)^3$ is used in this expression if kips are used. Use $(D)^3$ if lb are used.
4. For vessels having a lower section several times the diameter of the upper portion and where the lower portion is short compared to the overall height, the P.O.V. can more accurately be determined by finding the P.O.V. of the upper section alone (see Figure 3-39).
5. For vessels where R/t is large in comparison to the supporting skirt, the P.O.V. calculated by this method may be overly conservative. More accurate methods may be employed (see Figure 3-40).
6. Make sure to add moment due to any eccentric loads to total moment.

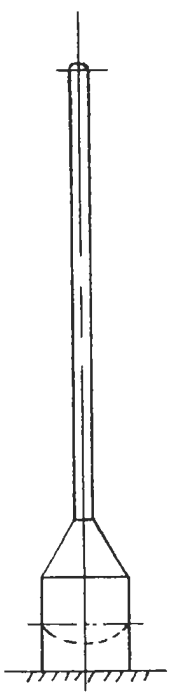

Figure 3-39. Nonuniform vessel illustrating Note 4.

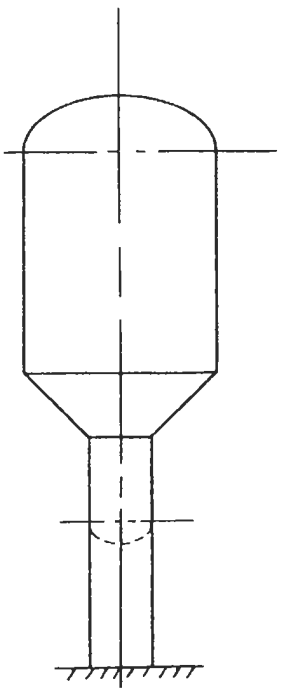

Figure 3-40. Nonuniform vessel illustrating Note 5.

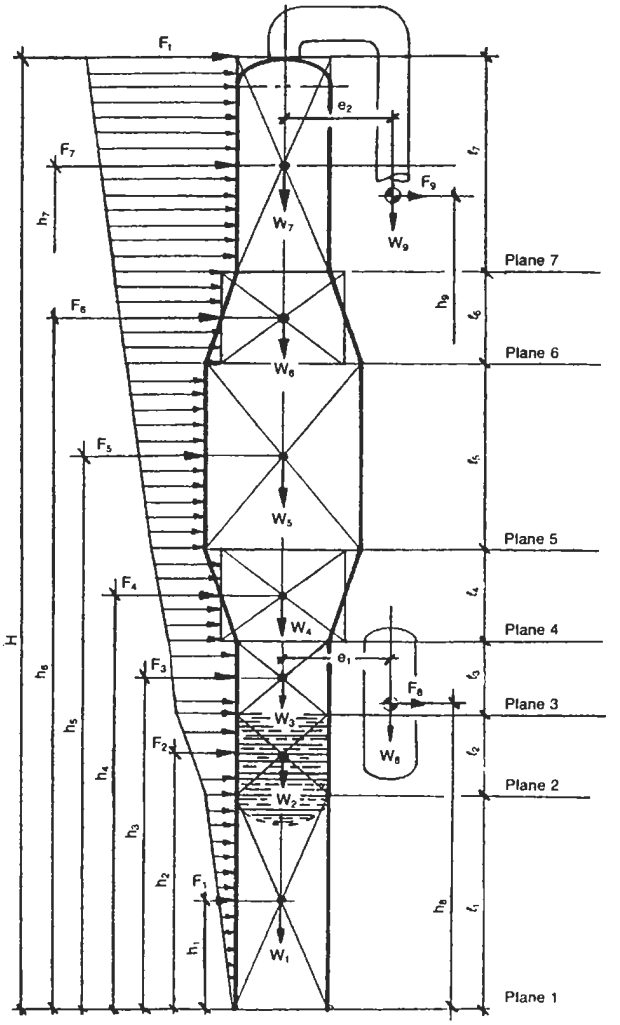

$$h_x = h_{1,2,3,4,5\cdots}$$

$$W_x = W_{1,2,3,4,5\cdots}$$

$$F_x = F_{1,2,3,4,5\cdots}$$

$$w_x = w_{1,2,3,4,5\cdots}$$

$$M_x = M_{1,2,3,4,5\cdots}$$

$$\ell_x = \ell_{1,2,3,4,5\cdots}$$

$$w_x = \frac{W_x}{\ell_x}$$

$$F_x = \frac{V - F_t}{\Sigma W_x h_x}(W_x h_x)$$

$$M_i = F_t(H - h_i) + \Sigma F_x(h_x - h_i)$$

Figure 3-41. Typical dimensional data, forces, and loadings on a nonuniform vessel supported on a skirt.

Step 1: PERIOD OF VIBRATION

	Part	ω or W	h_x/H	α	Δα or β	ωΔα or Wβ/H	γ	Δγ	$E(D/10)^3t\Delta\gamma$ Note 3
top			1.0	2.103			1.0		
			0	0			0		
base						Σ =			Σ =

$$T = \left(\frac{H}{100}\right)^2 \sqrt{\frac{\sum \omega \Delta\alpha + \sum W\beta/H}{\sum E(D/10)^3 t\ \Delta\gamma}}$$

See Notes 2 and 3.

V = (from Procedure 3-3)

F_t = lesser of .07 TV
or .25 V

F_t = 0 if T ≤ .7 sec

See example of completed form on next page.

Step 1: PERIOD OF VIBRATION EXAMPLE

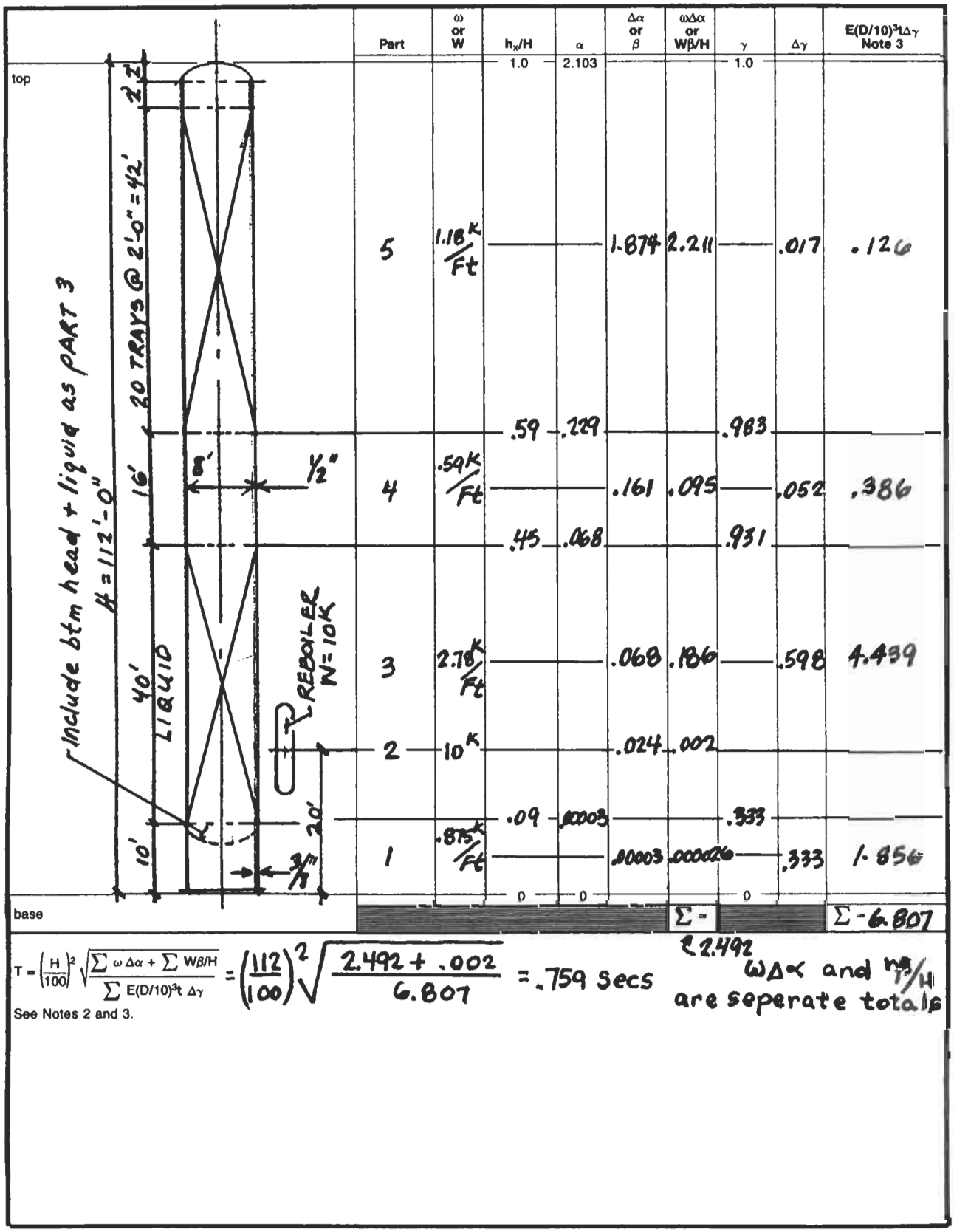

Part	ω or W	h_x/H	α	Δα or β	ωΔα or Wβ/H	γ	Δγ	$E(D/10)^3 t\Delta\gamma$ Note 3
		1.0	2.103			1.0		
5	1.18 K/Ft			1.874	2.211		.017	.126
		.59	.229			.983		
4	.59 K/Ft			.161	.095		.052	.386
		.45	.068			.931		
3	2.78 K/Ft			.068	.186		.598	4.439
2	10 K			.024	.002			
		.09	.00003			.333		
1	.875 K/Ft			.00003	.000026		.333	1.856
		0	0			0		
base					Σ - 2.492			Σ - 6.807

$$T = \left(\frac{H}{100}\right)^2 \sqrt{\frac{\sum \omega\Delta\alpha + \sum W\beta/H}{\sum E(D/10)^3 t\,\Delta\gamma}} = \left(\frac{112}{100}\right)^2 \sqrt{\frac{2.492 + .002}{6.807}} = .759 \text{ Secs}$$

ωΔα and $W\beta/H$ are seperate totals

See Notes 2 and 3.

Step 2: SHEAR AND MOMENTS

top	Part	W_x (kips)	h_x (ft)	W_xh_x (ft-kips)	F_x or F_t (kips)	V_x (kips)	M_x (ft-kips)
base		Σ =		Σ =			

$$F_x = \frac{V - F_t}{\sum W_x h_x}(W_x h_x) =$$

$$\sum W_x = W_O$$

$$M_x = F_t(H - h_i) + F_x(h_x - h_i) =$$

See example of completed form on next page.

Step 2: SHEAR AND MOMENTS EXAMPLE

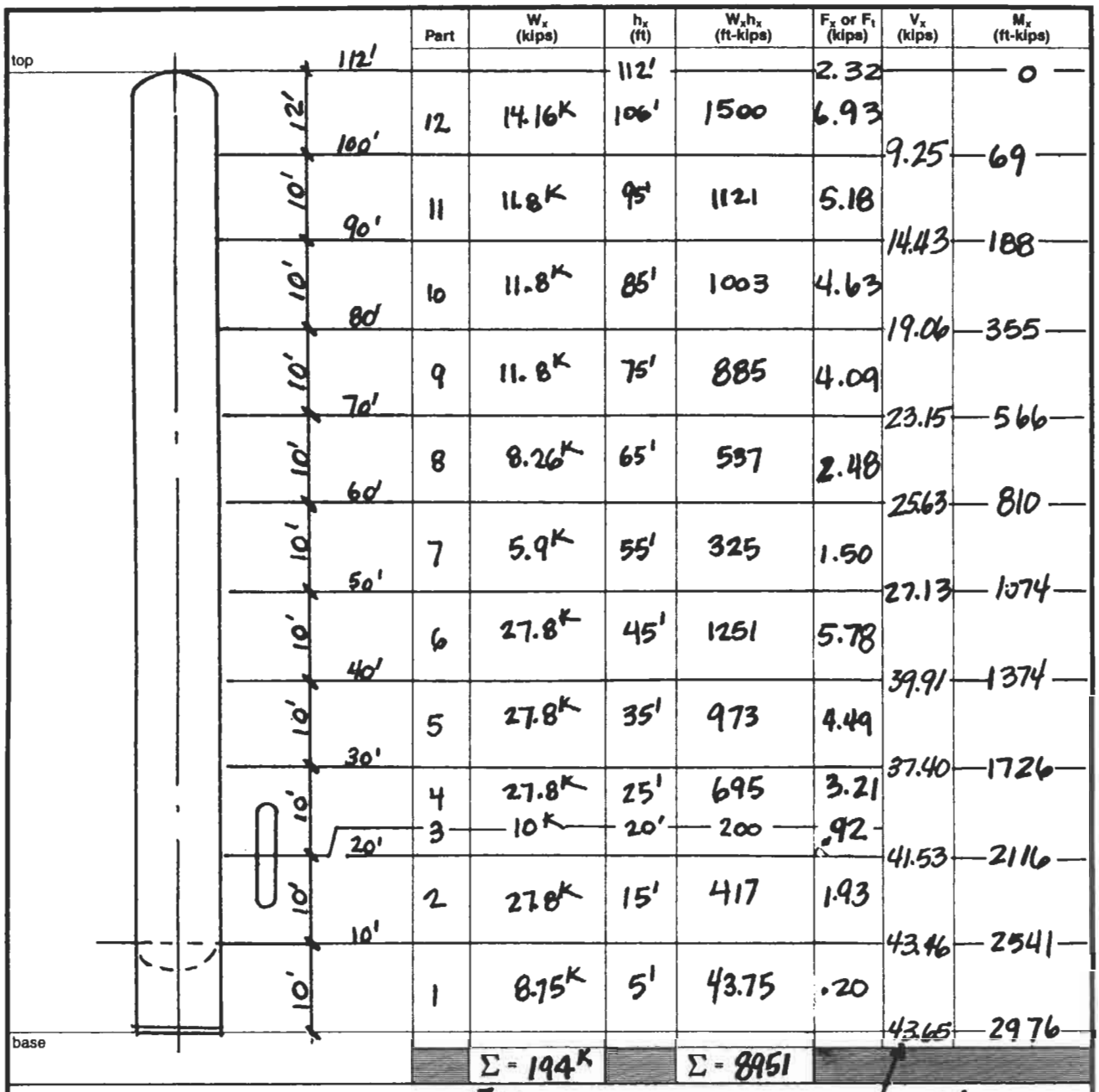

Part	W_x (kips)	h_x (ft)	W_xh_x (ft-kips)	F_x or F_t (kips)	V_x (kips)	M_x (ft-kips)
		112'		2.32		0
12	14.16K	106'	1500	6.93	9.25	69
11	11.8K	95'	1121	5.18	14.43	188
10	11.8K	85'	1003	4.63	19.06	355
9	11.8K	75'	885	4.09	23.15	566
8	8.26K	65'	537	2.48	25.63	810
7	5.9K	55'	325	1.50	27.13	1074
6	27.8K	45'	1251	5.78	39.91	1374
5	27.8K	35'	973	4.49	37.40	1726
4	27.8K	25'	695	3.21	41.53	2116
3	10K	20'	200	.92	43.46	2541
2	27.8K	15'	417	1.93	43.65	2976
1	8.75K	5'	43.75	.20		
	Σ = 194K		Σ = 8951			

$\Sigma = \sum W_i = W_O$; $= V$

$$F_x = \frac{V - F_t}{\sum W_x h_x}(W_x h_x) = \frac{43.65 - 2.32}{8951}(W_x h_x) = .0046(W_x h_x) =$$

$M_x = F_t(H - h_i) + F_x(h_x - h_i) =$

$100' = 2.32(112-100) + 6.93(106-100) = 69.42$

$90' = 2.32(22) + 6.93(16) + 5.18(5) = 187.82$

$80' = 2.32(32) + 6.93(26) + 5.18(15) + 4.63(5) = 355.27$

$70' = 2.32(42) + 6.93(36) + 5.18(25) + 4.63(15) + 4.09(5) = 566.32$

Longitudinal Stresses

In the following equations, D is in inches. The term "$48M_x$" is used for ft-lb or ft-kips. If in.-lb or in.-kips are used, then the term "$4M_x$" should be substituted where "$48M_x$" is used. The allowable stresses S_1E_1 or B may be substituted in the equations for t to determine or verify thickness at any elevation. Compare the stresses or thicknesses required at each elevation against the thickness required for circumferential stress due to internal pressure to determine which one will govern. If there is no external pressure condition, assume the maximum compression will occur when the vessel is not pressurized and the term $P_eD/4t$ will drop out.

$$\sigma_{xt} = \text{tension side} = \frac{P_iD}{4t} + \frac{48M_x}{\pi D^2 t} - \frac{W_h}{\pi Dt}$$

$$\sigma_{xc} = \text{compression side} = (-)\frac{P_eD}{4t} - \frac{48M_x}{\pi D^2 t} - \frac{W_h}{\pi Dt}$$

- *Allowable longitudinal stresses.*

tension : $S_1E_1 =$

compression:

$$A = \frac{0.125t}{R_o}$$

B = from applicable material chart of ASME Code, Section II, Part D, Subpart 3.
Note: Joint efficiency for longitudinal seams in compression is 1.0.

Elevation	M_x	W_h	D	t	Tension		Compression	
					S_1E_1	σ_{xt}	B	σ_{xc}

Table 3-20
Coefficients for Determining Period of Vibration of Free-Standing Cylindrical Shells Having Varying Cross Sections and Mass Distribution

$\frac{h_x}{H}$	α	β	γ	$\frac{h_x}{H}$	α	β	γ	$\frac{h_x}{H}$	α	β	γ
1.00	2.103	8.347	1.000000	0.65	0.3497	2.3365	0.99183	0.30	0.010293	0.16200	0.7914
0.99	2.021	8.121	1.000000	0.64	0.3269	2.2240	0.99065	0.29	0.008769	0.14308	0.7776
0.98	1.941	7.898	1.000000	0.63	0.3052	2.1148	0.98934	0.28	0.007426	0.12576	0.7632
0.97	1.863	7.678	1.000000	0.62	0.2846	2.0089	0.98789	0.27	0.006249	0.10997	0.7480
0.96	1.787	7.461	1.000000	0.61	0.2650	1.9062	0.98630	0.26	0.005222	0.09564	0.7321
0.95	1.714	7.248	0.999999	0.60	0.2464	1.8068	0.98455	0.25	0.004332	0.08267	0.7155
0.94	1.642	7.037	0.999998	0.59	0.2288	1.7107	0.98262	0.24	0.003564	0.07101	0.6981
0.93	1.573	6.830	0.999997	0.58	0.2122	1.6177	0.98052	0.23	0.002907	0.06056	0.6800
0.92	1.506	6.626	0.999994	0.57	0.1965	1.5279	0.97823	0.22	0.002349	0.05126	0.6610
0.91	1.440	6.425	0.999989	0.56	0.1816	1.4413	0.97573	0.21	0.001878	0.04303	0.6413
0.90	1.377	6.227	0.999982	0.55	0.1676	1.3579	0.97301	0.20	0.001485	0.03579	0.6207
0.89	1.316	6.032	0.999971	0.54	0.1545	1.2775	0.97007	0.19	0.001159	0.02948	0.5992
0.88	1.256	5.840	0.999956	0.53	0.1421	1.2002	0.96688	0.18	0.000893	0.02400	0.5769
0.87	1.199	5.652	0.999934	0.52	0.1305	1.1259	0.96344	0.17	0.000677	0.01931	0.5536
0.86	1.143	5.467	0.999905	0.51	0.1196	1.0547	0.95973	0.16	0.000504	0.01531	0.5295
0.85	1.090	5.285	0.999867	0.50	0.1094	0.9863	0.95573	0.15	0.000368	0.01196	0.5044
0.84	1.038	5.106	0.999817	0.49	0.0998	0.9210	0.95143	0.14	0.000263	0.00917	0.4783
0.83	0.988	4.930	0.999754	0.48	0.0909	0.8584	0.94683	0.13	0.000183	0.00689	0.4512
0.82	0.939	4.758	0.999674	0.47	0.0826	0.7987	0.94189	0.12	0.000124	0.00506	0.4231
0.81	0.892	4.589	0.999576	0.46	0.0749	0.7418	0.93661	0.11	0.000081	0.00361	0.3940
0.80	0.847	4.424	0.999455	0.45	0.0678	0.6876	0.93097	0.10	0.000051	0.00249	0.3639
0.79	0.804	4.261	0.999309	0.44	0.0612	0.6361	0.92495	0.09	0.000030	0.00165	0.3327
0.78	0.762	4.102	0.999133	0.43	0.0551	0.5872	0.91854	0.08	0.000017	0.00104	0.3003
0.77	0.722	3.946	0.998923	0.42	0.0494	0.5409	0.91173	0.07	0.000009	0.00062	0.2669
0.76	0.683	3.794	0.998676	0.41	0.0442	0.4971	0.90448	0.06	0.000004	0.00034	0.2323
0.75	0.646	3.645	0.998385	0.40	0.0395	0.4557	0.89679	0.05	0.000002	0.00016	0.1966
0.74	0.610	3.499	0.998047	0.39	0.0351	0.4167	0.88864	0.04	0.000001	0.00007	0.1597
0.73	0.576	3.356	0.997656	0.38	0.0311	0.3801	0.88001	0.03	0.000000	0.00002	0.1216
0.72	0.543	3.217	0.997205	0.37	0.0275	0.3456	0.87088	0.02	0.000000	0.00000	0.0823
0.71	0.512	3.081	0.996689	0.36	0.0242	0.3134	0.86123	0.01	0.000000	0.00000	0.0418
0.70	0.481	2.949	0.996101	0.35	0.0212	0.2833	0.85105	0.	0.	0.	0.
0.69	0.453	2.820	0.995434	0.34	0.0185	0.2552	0.84032				
0.68	0.425	2.694	0.994681	0.33	0.0161	0.2291	0.82901				
0.67	0.399	2.571	0.993834	0.32	0.0140	0.2050	0.81710				
0.66	0.374	2.452	0.992885	0.31	0.0120	0.1826	0.80459				

Reprinted by permission of the Chevron Corp., San Francisco.

Notes

1. This procedure is for use in determining forces and moments at various planes of uniform and nonuniform vertical pressure vessels.
2. To determine the plate thickness required at any given elevation compare the moments from both wind and seismic at that elevation. The larger of the two should be used. Wind-induced moments may govern the longitudinal loading at one elevation, and seismic-induced moments may govern another.

PROCEDURE 3-10

DESIGN OF HORIZONTAL VESSEL ON SADDLES [1, 3, 5, 14, 15]

Notation

A_r = cross-sectional area of composite ring stiffener, in.^{2}
A_f = projected area of vessel, ft^2
E = joint efficiency
E_1 = modulus of elasticity, psi
C_h = seismic factor (see Procedure 3-3)
C_f = shapefactor = 0.8
q_z = wind pressure, psf
D_e = effective vessel diameter, ft
I_1 = moment of inertia of ring stiffener, in.^{4}
t_w = thickness of wear plate, in.
t_s = thickness of shell, in.
t_h = thickness of head, in.
Q = total load per saddle (including piping loads, wind or seismic reactions, platforms, operating liquid, etc.) lb
W_o = operating weight of vessel, lb
M_1 = longitudinal bending moment at saddles, in.-lb
M_2 = longitudinal bending moment at midspan, in.-lb
S = allowable stress, tension, psi
S_c = allowable stress, compression, psi
S_{1-14} = shell, head, and ring stresses, psi
K_{1-9} = coefficients
F_L = longitudinal force due to wind, seismic, expansion, contraction, etc., lb
F_T = transverse force, wind or seismic, lb
σ_x = longitudinal stress, internal pressure, psi
σ_ϕ = circumferential stress, internal pressure, psi
σ_c = longitudinal stress, external pressure, psi
σ_s = circumferential stress in stiffening ring, psi
σ_h = latitudinal stress in head due to internal pressure, psi
F_y = minimum yield stress, shell, psi
P = internal pressure, psi
P_c = external pressure, psi
G = gust factor, wind
K_z = velocity pressure coefficient
I = importance factor, 1.0–1.25 for vessels
V = basic wind speed, mph
K_s = pier spring rate, 46 $\frac{\text{lbs}}{\text{in}}$.
μ = friction coefficient
y = pier deflection, in.

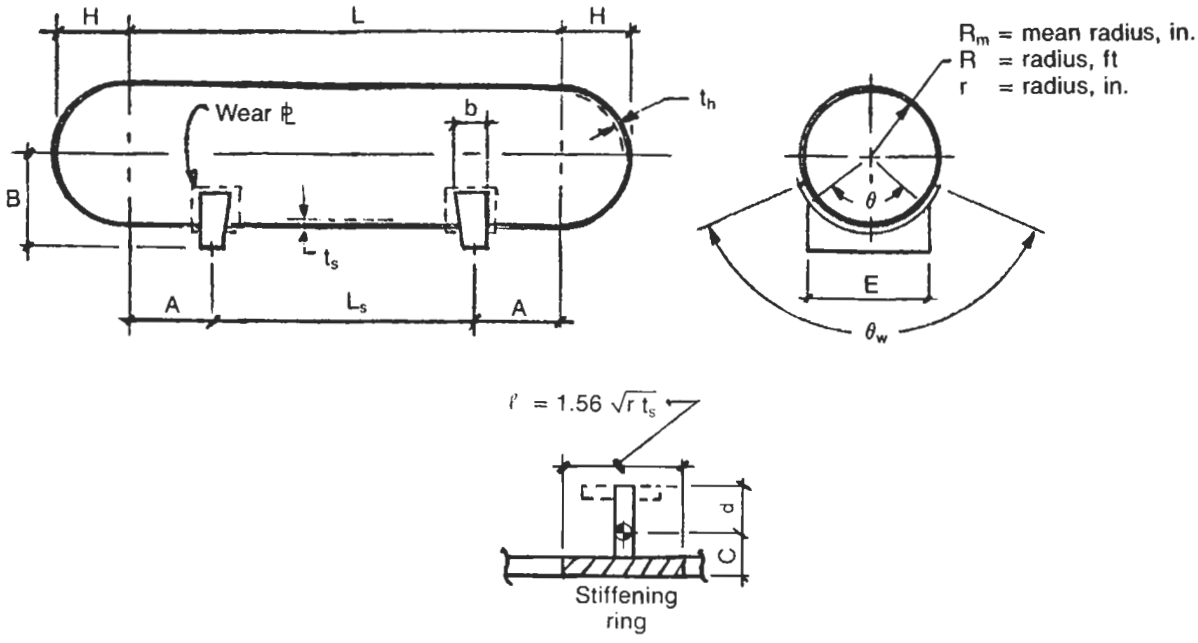

Figure 3-42. Typical dimensions for a horizontal vessel supported on two saddles.

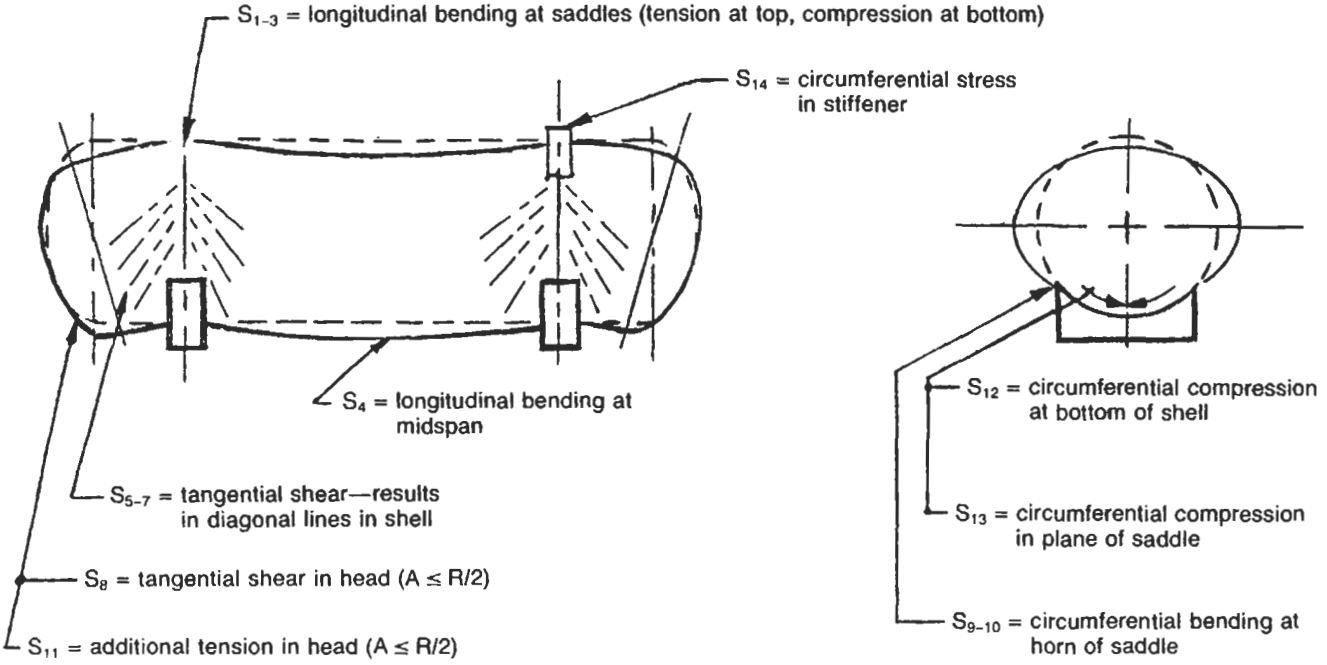

Figure 3-43. Stress diagram.

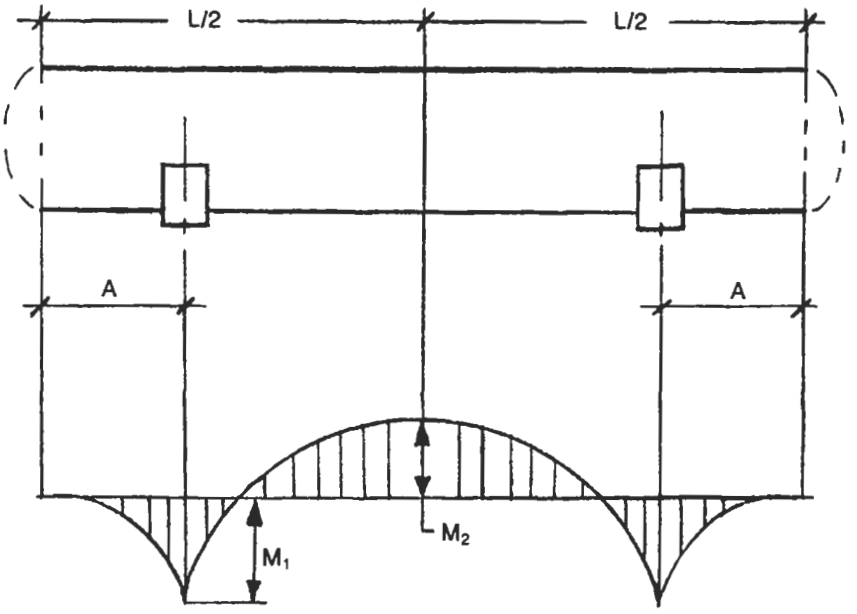

M_2 is negative for

- Hemi-heads.
- If any of the below conditions are exceeded.

M_2 is positive for

- Flat heads where A/R < 0.707.
- 100%–6% F&D heads where A/R < 0.44.
- 2:1 S.E. heads where A/R < 0.363.

Figure 3-44. Moment diagram.

Longitudinal Forces, F_L	
Case 1: Pier Deflection $F_{L1} = \frac{K_s y}{2}$ $S_a = S$	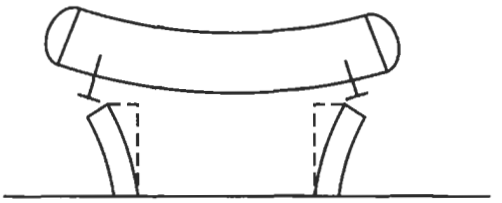
Case 2: Expansion/Contraction $F_{L2} = \mu Q_0$ $S_a = S$	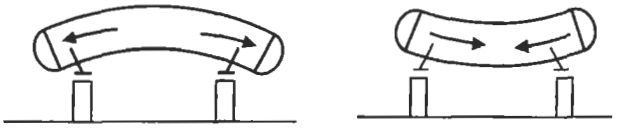
Case 3: Wind $F_{L3} = F_{wL} = A_f C_f G q_z$ $S_a = 1.33S$	
Case 4: Seismic $F_{L4} = F_e = C_h W_o$ $S_a = 1.33S$	
Case 5: Shipping/Transportation F_{L5} (See Chapter 7.) $S_a = 0.9F_y$	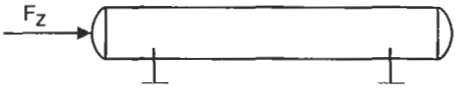
Case 6: Bundle Pulling $F_{L6} = F_p$ $S_a = 0.9F_y$ Full load applies to fixed saddle only!	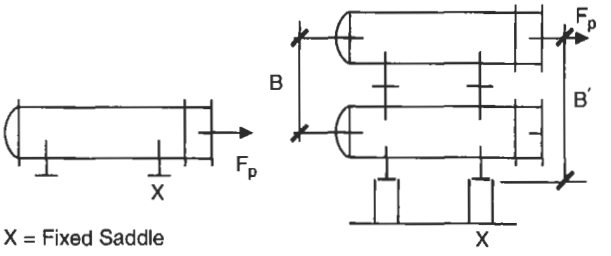 X = Fixed Saddle
Note: For Cases 5 and 6, assume the vessel is cold and not pressurized.	

Transverse Load: Basis for Equations

Method 1

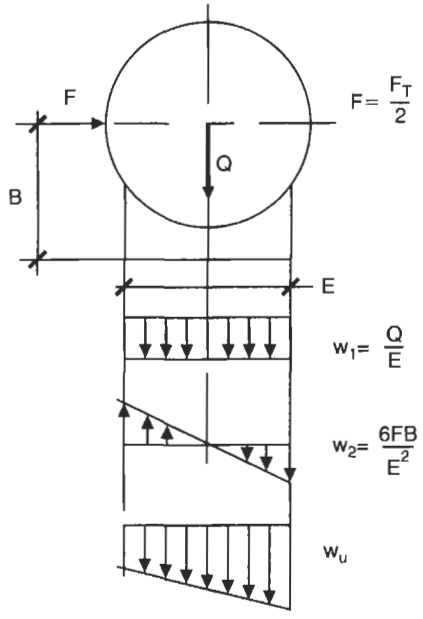

- *Unit load at edge of base plate, w_u.*

$$w_u = w_1 + w_2$$

- *Derivation of equation for w_2.*

$$\sigma = \frac{M}{Z} \qquad M = FB \qquad Z = \frac{E^2}{6}$$

Therefore

$$\frac{M}{Z} = \frac{6FB}{E^2}$$

- *Equivalent total load Q_2.*

$$Q_2 = w_u E$$

This assumes that the maximum load at the edge of the baseplate is uniform across the entire baseplate. This is very conservative, so the equation is modified as follows:

- *Using a triangular loading and 2/3 rule to develop a more realistic "uniform load"*

$$F_1 = \frac{FB}{(2/3)E} = \frac{3FB}{2E}$$

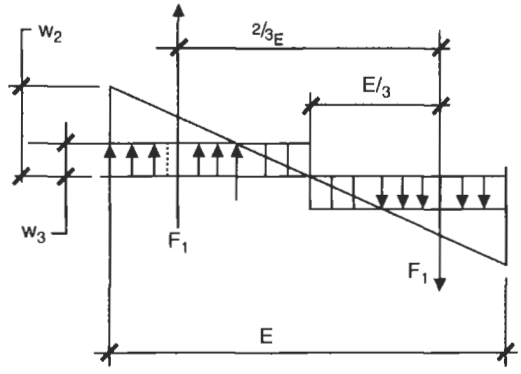

$$w_3 = \frac{3FB}{2E} \div \frac{E}{2} = \frac{6FB}{2E^2} = \frac{3FB}{E^2}$$

Therefore the total load, Q_F, due to force F is

$$Q_F = w_3 E = \frac{3FB}{E^2} E = \frac{3FB}{E}$$

Method 2

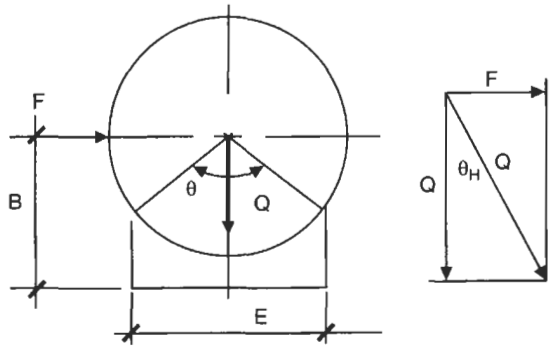

This method is based on the rationale that the load is no longer spread over the entire saddle but is shifted to one side.

- *Combined force, Q_2.*

$$Q_2 = \sqrt{F^2 + Q^2}$$

- *Angle, θ_H.*

$$\theta_H = (\arctan)\frac{F}{Q}$$

- *Modified saddle angle, θ_1.*

$$\theta_1 = 2\left[\frac{\theta}{2}\right] - \theta_H$$

Types of Stresses and Allowables

- *S_1 to S_4: longitudinal bending.*

  Tension: S_1, S_3, or $S_4 + \sigma_x < SE$

  Compression: S_2, S_3, or $S_4 - \sigma_e < S_c$

  where S_c = factor "B" or S or $t_s E_1/16r$

  whichever is less.

1. Compressive stress is not significant where $R_m/t < 200$ and the vessel is designed for internal pressure only.
2. When longitudinal bending at midspan is excessive, move saddles away from heads; however, do not exceed $A \geq 0.2\,L$.
3. When longitudinal bending at saddles is excessive, move saddles toward heads.
4. If longitudinal bending is excessive at both saddles and midspan, add stiffening rings. If stresses are still excessive, increase shell thickness.

- *S_5 to $S_8 < 0.8S$: tangential shear.*

1. Tangential shear is not combined with other stresses.
2. If a wear plate is used, t_s may be taken as $t_s + t_w$, providing the wear plate extends R/10 above the horn of the saddle.
3. If the shell is unstiffened, the maximum tangential shear stress occurs at the horn of the saddle.
4. If the shell is stiffened, the maximum tangential shear occurs at the equator.
5. When tangential shear stress is excessive, move saddles toward heads, $A \leq 0.5$ R, add rings, or increase shell thickness.
6. When stiffening rings are used, the shell-to-ring weld must be designed to be adequate to resist the tangential shear as follows:

$$S_t = \frac{Q}{\pi r} : \frac{\text{lb}}{\text{in. circumference}} < \frac{\text{allowable shear}}{\text{in. of weld}}$$

- *$S_{11} + \sigma_h < 1.25\,SE$: additional stress in head.*

1. S_{11} is a shear stress that is additive to the hoop stress in the head and occurs whenever the saddles are located close to the heads, $A \leq 0.5$ R. Due to their close proximity the shear of the saddle extends into the head.
2. If stress in the head is excessive, move saddles away from heads, increase head thickness, or add stiffening rings.

- *S_9 and $S_{10} < 1.5\,S$ and $0.9F_y$: circumferential bending at horn of saddle.*

1. If a wear plate is used, t_s may be taken as $t_s + t_w$ providing the wear plate extends R/10 above the horn of the saddle. Stresses must also be checked at the top of the wear plate.
2. If stresses at the horn of the saddle are excessive:
   a. Add a wear plate.
   b. Increase contact angle θ.
   c. Move saddles toward heads, A < R.
   d. Add stiffening rings.

- *$S_{12} < 0.5F_y$ or $1.5\,S$: circumferential compressive stress.*

1. If a wear plate is used, t_s may be taken as $t_s + t_w$, providing the width of the wear plate is at least

   $b + 1.56\sqrt{rt_s}$.

2. If the shell is unstiffened the maximum stress occurs at the horn of the saddle.
3. If the shell is stiffened the maximum hoop compression occurs at the bottom of the shell.
4. If stresses are excessive add stiffening rings.

- *$(+)S_{13} + \sigma_\phi < 1.5\,S$: circumferential tension stress—shell stiffened.*
- *$(-)S_{13} - \sigma_x < 0.5F_y$: circumferential compression stress—shell stiffened.*
- *$(-)S_{14} - \sigma_x < 0.9F_y$: circumferential compression stress in stiffening ring.*

Procedure for Locating Saddles

Trial 1: Set $A = 0.2$ L and $\theta = 120°$ and check stress at the horn of the saddle, S_9 or S_{10}. This stress will govern for most vessels except for those with large L/R ratios.

Trial 2: Increase saddle angle θ to 150° and recheck stresses at horn or saddle, S_9 or S_{10}.

Trial 3: Move saddles near heads ($A = R/2$) and return θ to 120°. This will take advantage of stiffness provided by the heads and will also induce additional stresses in the heads. Compute stresses S_4, S_8, and S_9 or S_{10}. A wear plate may be used to reduce the stresses at the horn or saddle when the saddles are near the heads ($A < R/2$) and the wear plate extends R/10 above the horn of the saddle.

Trial 4: Increase the saddle angle to 150° and recheck stresses S_4, S_8, and S_9 or S_{10}. Increase the saddle angle progressively to a maximum of 168° to reduce stresses.

Trial 5: Move saddles to $A = 0.2L$ and $\theta = 120°$ and design ring stiffeners in the plane of the saddles using the equations for S_{13} and S_{14} (see Note 7).

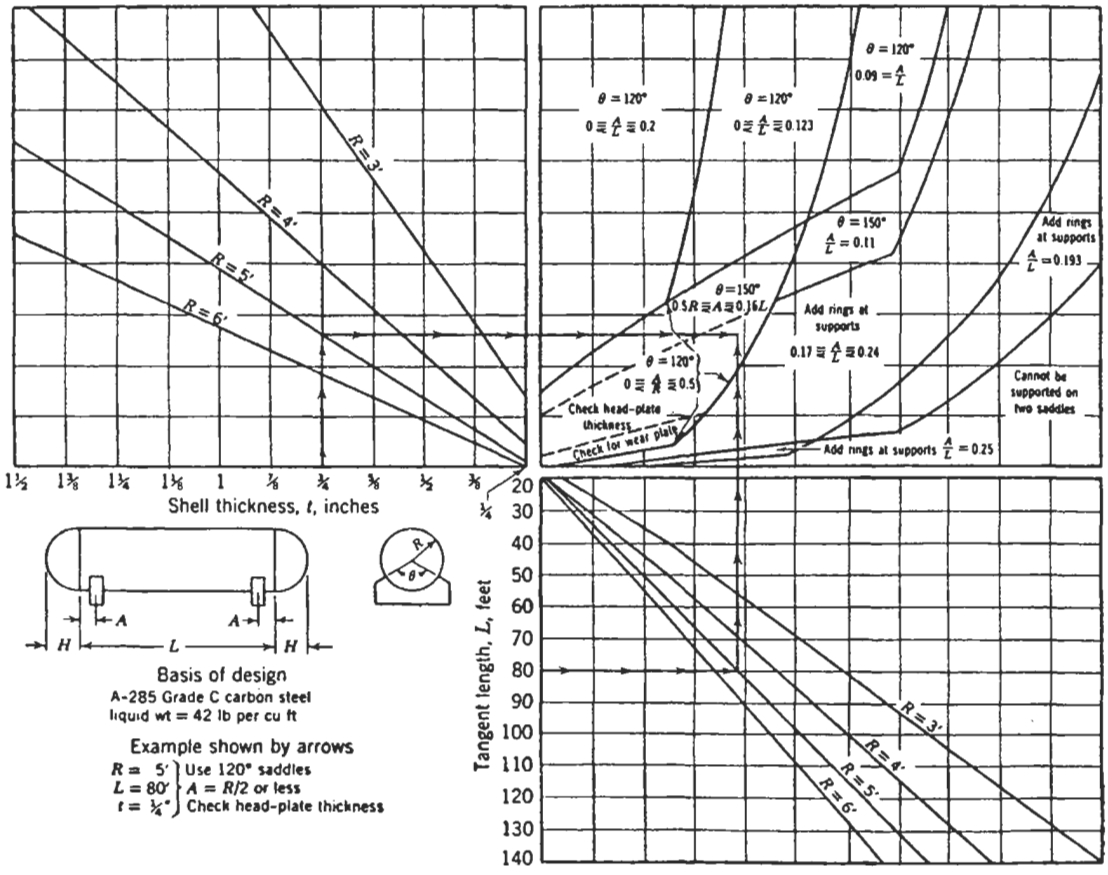

Figure 3-45. Chart for selection of saddles for horizontal vessels. Reprinted by permission of the American Welding Society.

Wind and Seismic Forces

- *Longitudinal forces, F_L*

  Seismic: UBC (see Procedure 3-3)

  $F_L = C_h W_o$

  Wind: ASCE 7-95 (Exposure C, Type III)

  $F_L = A_f C_f G_\sigma q_z$

  where $A_f = \dfrac{\pi D_c^2}{4}$

  $C_f = 0.8$

  $G = 0.85$

  $q_z = 0.00256 K_z V^2 I$

  K_z = from Table 3-23

  $I = 1.15$

  V = basic wind speed, 70 – 100 mph (see Procedure 3-2)

Table 3-21
Seismic Factors, C_s (For I = 1.0)

Zone	C_s
0	0
1	0.069
2A	0.138
2B	0.184
3	0.275
4	0.367

Table 3-22
Effective Diameter, D_e

Diameter (in.)	D_e
< 36	1.5D
36–54	1.37D
54–78	1.28D
78–102	1.2D
> 102	1.18D

Table 3-23
Coefficient, K_z

Height (ft)	K_z
0–15	0.85
20	0.9
25	0.94
30	0.98
40	1.04
50	1.09
60	1.13

- *Transverse forces, F_t, per saddle.*

  Seismic:

  $F_t = (C_h W_o)0.5$

  Wind:

  $F_t = (A_f C_f G_d q_z)0.5$

  $A_f = D_e(L + 2H)$

- *Total saddle reaction forces, Q.*

  Q = greater of Q_1 or Q_2

  Longitudinal, Q_1

$$Q_1 = \frac{W_o}{2} + \frac{F_L B}{L_s}$$

  Transverse, Q_2

$$Q_2 = \frac{W_o}{2} + \frac{3F_t B}{L_s}$$

Shell Stresses

There are 14 main stresses to be considered in the design of a horizontal vessel on saddle supports:

S_1 = longitudinal bending at saddles without stiffeners, tension
S_2 = longitudinal bending at saddles without stiffeners, compression
S_3 = longitudinal bending at saddles with stiffeners

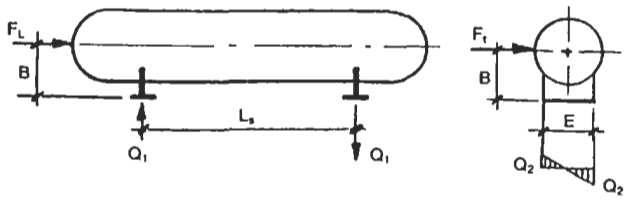

Figure 3-46. Saddle reaction forces.

S_4 = longitudinal bending at midspan, tension at bottom, compression at top
S_5 = tangential shear—shell stiffened in plane of saddle
S_6 = tangential shear—shell not stiffened, A > R/2
S_7 = tangential shear—shell not stiffened except by heads, A ≤ R/2
S_8 = tangential shear in head—shell not stiffened, A ≤ R/2
S_9 = circumferential bending at horn of saddle—shell not stiffened, L ≥ 8R
S_{10} = circumferential bending at horn of saddle—shell not stiffened, L < 8R
S_{11} = additional tension stress in head, shell not stiffened, A ≤ R/2
S_{12} = circumferential compressive stress—stiffened or not stiffened, saddles attached or not
S_{13} = circumferential stress in shell with stiffener in plane of saddle
S_{14} = circumferential stress in ring stiffener

Longitudinal Bending

- *S_1, longitudinal bending at saddles—without stiffeners, tension.*

$$M_1 = 6Q\left[\frac{8AH + 6A^2 - 3R^2 + 3H^2}{3L + 4H}\right]$$

$$S_1 = (+)\frac{M_1}{K_1 r^2 t_s}$$

- *S_2, longitudinal bending at saddles—without stiffeners, compression.*

$$S_2 = (-)\frac{M_1}{K_7 r^2 t_s}$$

- *S_3, longitudinal bending at saddles—with stiffeners.*

$$S_3 = (\pm)\frac{M_1}{\pi r^2 t_s}$$

- *S_4, longitudinal bending at midspan.*

$$M_2 = 3Q\left[\frac{3L^2 + 6R^2 - 6H^2 - 12AL - 16AH}{3L + 4H}\right]$$

$$S_4 = (\pm)\frac{M_2}{\pi r^2 t_s}$$

Tangential Shear

- *S_5, tangential shear—shell stiffened in the plane of the saddle.*

$$S_5 = \frac{Q}{\pi r t_s}\left[\frac{L - 2A}{L + \frac{4}{3}H}\right]$$

- S_6, *tangential shear—shell not stiffened, A > 0.5R.*

$$S_6 = \frac{K_2 Q}{r t_s}\left[\frac{L - 2A}{L + \frac{4}{3}H}\right]$$

- S_7, *tangential shear—shell not stiffened, A ≤ 0.5R.*

$$S_7 = \frac{K_3 Q}{r t_s}$$

- S_8, *tangential shear in head—shell not stiffened, A ≤ 0.5R.*

$$S_8 = \frac{K_3 Q}{r t_h}$$

Note: If shell is stiffened or A > 0.5R, $S_8 = 0$.

Circumferential Bending

- S_9, *circumferential bending at horn of saddle—shell not stiffened (L ≥ 8R).*

$$S_9 = (-)\frac{Q}{4t_s(b + 1.56\sqrt{rt_s})} - \frac{3K_6 Q}{2t_s^2}$$

Note: $t_s = t_s + t_w$ and $t_s^2 = t_s^2 + t_w^2$ only if A ≤ 0.5R and wear plate extends R/10 above horn of saddle.

- S_{10}, *circumferential bending at horn of saddle—shell not stiffened (L < 8R).*

$$S_{10} = (-)\frac{Q}{4t_s(b + 1.56\sqrt{rt_s})} - \frac{12K_6 QR}{Lt_s^2}$$

Note: Requirements for t_s are same as for S_9.

Additional Tension Stress in Head

- S_{11}, *additional tension stress in head—shell not stiffened, A ≤ 0.5R.*

$$S_{11} = \frac{K_4 Q}{r t_h}$$

Note: If shell is stiffened or A > 0.5R, $S_{11} = 0$.

Circumferential Tension/Compression

- S_{12}, *circumferential compression.*

$$S_{12} = (-)\frac{K_5 Q}{t_s(b + 1.56\sqrt{rt_s})}$$

Note: $t_s = t_s + t_w$ only if wear plate is attached to shell and width of wear plate is a minimum of $b + 1.56\sqrt{rt_s}$.

- S_{13}, *circumferential stress in shell with stiffener (see Note 8).*

$$S_{13} = (-)\frac{K_8 Q}{A_r} \pm \frac{K_9 QrC}{I_1}$$

Note: Add second expression if vessel has an internal stiffener, subtract if vessel has an external stiffener.

- S_{14}, *circumferential compressive stress in stiffener (see Note 8).*

$$S_{14} = (-)\frac{K_8 Q}{A_r} - \frac{K_9 Qrd}{I_1}$$

Pressure Stresses

$$\sigma_x = \frac{PR_m}{2t_s}$$

$$\sigma_\phi = \frac{PR_m}{t_s}$$

$$\sigma_e = \frac{P_e R_m}{2t_s}$$

$$\sigma_s = \frac{PlR_m}{A_r}$$

$\sigma_h = \sigma_\phi$, maximum circumferential stress in head is equal to hoop stress in shell

COMBINED STRESSES

TENSION			COMPRESSION		
Stress		Allowable	Stress		Allowable
$S_1+\sigma_x$		SE =	$-S_2-\sigma_\theta$		S_c =
$S_3+\sigma_x$		SE =	$-S_3-\sigma_c$		S_c =
$S_4+\sigma_x$		SE =	$-S_4-\sigma_e$		S_c =
$S_{11}+\sigma_h$		1.25SE =	$-S_{13}-\sigma_s$		$0.5F_y$ =
$S_{13}+\sigma_\phi$		1.5SE =	$-S_{14}-\sigma_s$		$0.9F_y$ =

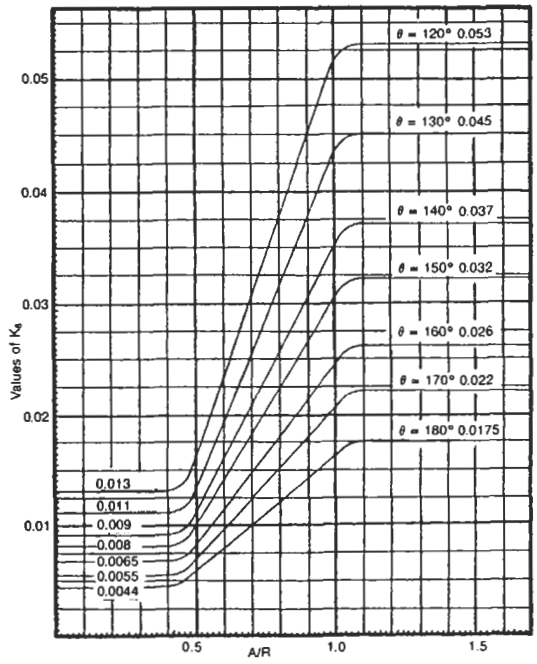

Contact Angle θ	K_1*	K_2	K_3	K_4	K_5	K_7	K_8	K_9	Contact Angle θ	K_1*	K_2	K_3	K_4	K_5	K_7	K_8	K_9
120	0.335	1.171	0.880	0.401	0.760	0.603	0.340	0.053	152	0.518	0.781	0.466	0.289	0.669	0.894	0.298	0.031
122	0.345	1.139	0.846	0.393	0.753	0.618	0.338	0.051	154	0.531	0.763	0.448	0.283	0.665	0.913	0.296	0.030
124	0.355	1.108	0.813	0.385	0.746	0.634	0.336	0.050	156	0.544	0.746	0.430	0.278	0.661	0.933	0.294	0.028
126	0.366	1.078	0.781	0.377	0.739	0.651	0.334	0.048	158	0.557	0.729	0.413	0.272	0.657	0.954	0.292	0.027
128	0.376	1.050	0.751	0.369	0.732	0.669	0.332	0.047	160	0.571	0.713	0.396	0.266	0.654	0.976	0.290	0.026
130	0.387	1.022	0.722	0.362	0.726	0.689	0.330	0.045	162	0.585	0.698	0.380	0.261	0.650	0.994	0.286	0.025
132	0.398	0.996	0.694	0.355	0.720	0.705	0.328	0.043	164	0.599	0.683	0.365	0.256	0.647	1.013	0.282	0.024
134	0.409	0.971	0.667	0.347	0.714	0.722	0.326	0.042	166	0.613	0.668	0.350	0.250	0.643	1.033	0.278	0.024
136	0.420	0.946	0.641	0.340	0.708	0.740	0.324	0.040	168	0.627	0.654	0.336	0.245	0.640	1.054	0.274	0.023
138	0.432	0.923	0.616	0.334	0.702	0.759	0.322	0.039	170	0.642	0.640	0.322	0.240	0.637	1.079	0.270	0.022
140	0.443	0.900	0.592	0.327	0.697	0.780	0.320	0.037	172	0.657	0.627	0.309	0.235	0.635	1.097	0.266	0.021
142	0.455	0.879	0.569	0.320	0.692	0.796	0.316	0.036	174	0.672	0.614	0.296	0.230	0.632	1.116	0.262	0.020
144	0.467	0.858	0.547	0.314	0.687	0.813	0.312	0.035	176	0.0687	0.601	0.283	0.225	0.629	1.137	0.258	0.019
146	0.480	0.837	0.526	0.308	0.682	0.831	0.308	0.034	178	0.702	0.589	0.271	0.220	0.627	1.158	0.254	0.018
148	0.492	0.818	0.505	0.301	0.678	0.853	0.304	0.033	180	0.718	0.577	0.260	0.216	0.624	1.183	0.250	0.017
150	0.505	0.799	0.485	0.295	0.673	0.876	0.300	0.032									

*K_1 = 3.14 if the shell is stiffened by ring or head (A < R/2).

Figure 3-47. Coefficients.

Table 3-24

Coefficients for Zick's Analysis (Angles 80° to 120°)

SADDLE ANGLE θ	K_1	K_2	K_3	K_4	K_5	A/R ≤ 0.5 K_6	A/R ≥ 1.0 K_6	K_7	K_8	K_9
80	0.1711	2.2747	2.0419	0.6238	0.9890	0.0237	0.0947	0.3212	0.3592	−0.0947
81	0.1744	2.2302	1.9956	0.6163	0.9807	0.0234	0.0934	0.3271	0.3592	0.0934
82	0.1777	2.1070	1.9506	0.6090	0.9726	0.0230	0.0922	0.3331	0.3593	0.0922
83	0.1811	2.1451	1.9070	0.6018	0.9646	0.0227	0.0910	0.3391	0.3593	0.0910
84	0.1845	2.1044	1.8645	0.5947	0.9568	0.0224	0.0897	0.3451	0.3593	0.0897
85	0.1879	2.0648	1.8233	0.5877	0.9492	0.0221	0.0885	0.3513	0.3593	0.0885
86	0.1914	2.0264	1.7831	0.5808	0.9417	0.0218	0.0873	0.3575	0.3592	0.0873
87	0.1949	1.9891	1.7441	0.5741	0.9344	0.0215	0.0861	0.3637	0.3591	0.0861
88	0.1985	1.9528	1.7061	0.5675	0.9273	0.0212	0.0849	0.3700	0.3590	0.0849
89	0.2021	1.9175	1.6692	0.5610	0.9203	0.0209	0.0838	0.3764	0.3588	0.0830
90	0.2057	1.8832	1.6332	0.5546	0.9134	0.0207	0.0826	0.3828	0.3586	0.0826
91	0.2094	1.8497	1.5981	0.5483	0.9067	0.0204	0.0815	0.3893	0.3584	0.0815
92	0.2132	1.8172	1.5640	0.5421	0.9001	0.0201	0.0803	0.3959	0.3582	0.0803
93	0.2169	1.7856	1.5308	0.5360	0.8937	0.0198	0.0792	0.4025	0.3579	0.0792
94	0.2207	1.7548	1.4984	0.5300	0.8874	0.0195	0.0781	0.4092	0.3576	0.0781
95	0.2246	1.7247	1.4668	0.5241	0.8812	0.0192	0.0770	0.4160	0.3573	0.0770
96	0.2285	1.6955	1.4360	0.5183	0.8751	0.0190	0.0759	0.4228	0.3569	0.0759
97	0.2324	1.6670	1.4060	0.5125	0.8692	0.0187	0.0748	0.4296	0.3565	0.0748
98	0.2364	1.6392	1.3767	0.5069	0.8634	0.0184	0.0737	0.4366	0.3561	0.0737
99	0.2404	1.6122	1.3482	0.5013	0.8577	0.0182	0.0727	0.4436	0.3557	0.0727
100	0.2445	1.5858	1.3203	0.4959	0.8521	0.0179	0.0716	0.4506	0.3552	0.0716
101	0.2486	1.5600	1.2931	0.4905	0.8466	0.0176	0.0706	0.4577	0.3547	0.0706
102	0.2528	1.5349	1.2666	0.4852	0.8412	0.0174	0.0696	0.4649	0.3542	0.0696
103	0.2570	1.5104	1.2407	0.4799	0.8359	0.0171	0.0686	0.4721	0.3536	0.0686
104	0.2612	1.4865	1.2154	0.4748	0.8308	0.0169	0.0675	0.4794	0.3531	0.0675
105	0.2655	1.4631	1.1907	0.4697	0.8257	0.0166	0.0666	0.4868	0.3525	0.0666
106	0.2698	1.4404	1.1665	0.4647	0.8207	0.0164	0.0656	0.4942	0.3518	0.0656
107	0.2742	1.4181	1.1429	0.4597	0.8159	0.0161	0.0646	0.5017	0.3512	0.0646
108	0.2786	1.3964	1.1199	0.4549	0.8111	0.0159	0.0636	0.5092	0.3505	0.0636
109	0.2830	1.3751	1.0974	0.4500	0.8064	0.0157	0.0627	0.5168	0.3498	0.0627
110	0.2875	1.3544	1.0753	0.4453	0.8018	0.0154	0.0617	0.5245	0.3491	0.0617
111	0.2921	1.3341	1.0538	0.4406	0.7973	0.0152	0.0608	0.5322	0.3483	0.0608
112	0.2966	1.3143	1.0327	0.4360	0.7928	0.0150	0.0599	0.5400	0.3475	0.0599
113	0.3013	1.2949	1.0121	0.4314	0.7885	0.0147	0.0590	0.5478	0.3467	0.0590
114	0.3059	1.2760	0.9920	0.4269	0.7842	0.0145	0.0581	0.5557	0.3459	0.0581
115	0.3107	1.2575	0.9723	0.4225	0.7800	0.0143	0.0572	0.5636	0.3451	0.0572
116	0.3154	1.2394	0.9530	0.4181	0.7759	0.0141	0.0563	0.5717	0.3442	0.0563
117	0.3202	1.2216	0.9341	0.4137	0.7719	0.0139	0.0554	0.5797	0.3433	0.0554
118	0.3251	1.2043	0.9157	0.4095	0.7680	0.0136	0.0546	0.5878	0.3424	0.0546
119	0.3300	1.1873	0.8976	0.4052	0.7641	0.0134	0.0537	0.5960	0.3414	0.0537
120	0.3349	1.1707	0.8799	0.4011	0.7603	0.0132	0.0529	0.6043	0.3405	0.0529
θ SADDLE ANGLE	K_1	K_2	K_3	K_4	K_5	K_6 A/R ≤ 0.5	K_6 A/R ≥ 1.0	K_7	K_8	K_9

Notes:
1. These coefficients are derived from Zick's equations.
2. The ASME Code does not recommend the use of saddles with an included angle, θ, less than 120°. Therefore the values in this table should be used for very small-diameter vessels or to evaluate existing vessels built prior to this ASME recommendation.
3. Values of K_6 for A/R ratios between 0.5 and 1 can be interpolated.

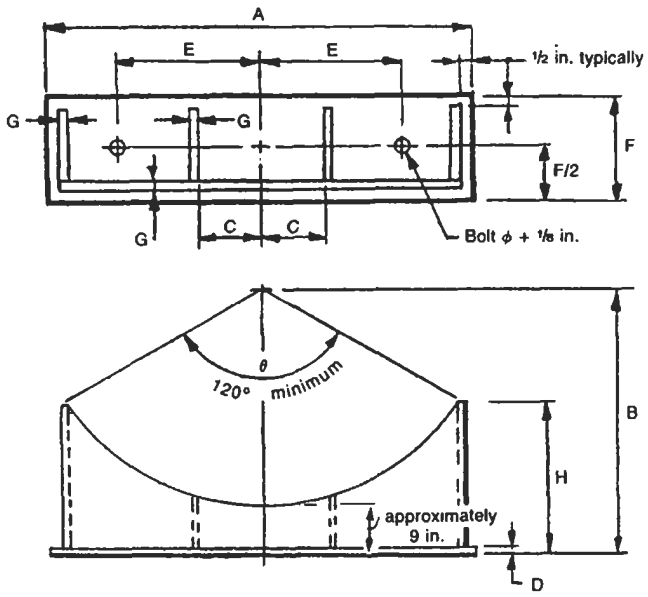

Figure 3-48. Saddle dimensions.

Table 3-25
Slot Dimensions

Temperature °F	Distance Between Saddles				
	10 ft	20 ft	30 ft	40 ft	50 ft
– 50	0	0	0.25	0.25	0.375
100	0	0	0.125	0.125	0.250
200	0	0.250	0.375	0.375	0.500
300	0.250	0.375	0.625	0.750	1.00
400	0.375	0.625	0.875	1.125	1.375
500	0.375	0.750	1.125	1.500	1.625
600	0.500	1.00	1.375	1.875	2.250
700	0.625	1.125	1.625	2.125	2.625
800	0.750	1.250	1.625	2.375	3.000
900	0.750	1.375	2.000	2.500	3.375

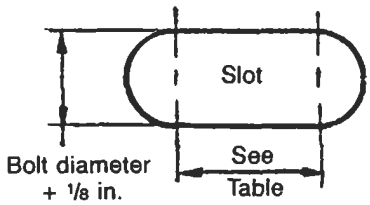

Table 3-26
Typical Saddle Dimensions*

Vessel O.D.	Maximum Operating Weight	A	B	C	D	E	F	G	H	Bolt Diameter	θ	Approximate Weight/Set
24	15,400	22	21	N.A.	0.5	7	4	0.25	15.2	1	122°	80
30	16,700	27	24	↓	↓	9	4	↓	16.5	↓	120°	100
36	15,700	33	27	↓	↓	12	6	↓	18.8	↓	125°	170
42	15,100	38	30	↓	↓	15	↓	↓	20.0	↓	123°	200
48	25,330	44	33	↓	↓	18	↓	↓	22.3	↓	127°	230
54	26,730	48	36	↓	↓	20	↓	↓	22.7	↓	121°	270
60	38,000	54	39	↓	↓	23	↓	↓	25.0	↓	124°	310
66	38,950	60	42	↓	↓	26	↓	↓	27.2	↓	127°	35D
72	50,700	64	45	10	↓	28	↓	0.375	27.6	↓	122°	420
78	56,500	70	48	11	0.75	31	8	↓	29.8	↓	124°	710
84	57,525	74	51	12	↓	33	↓	↓	30.2	↓	121°	810
90	64,200	80	54	13	↓	36	↓	↓	32.5	↓	123°	880
96	65,400	86	57	14	↓	39	↓	↓	34.7	↓	125°	940
102	94,500	92	60	15	↓	42	10	0.500	37.0	1¼	126°	1,350
108	85,000	96	63	16	↓	44	↓	↓	37.3	↓	123°	1,430
114	164,000	102	66	17	↓	47	↓	0.625	39.6	↓	125°	1,760
120	150,000	106	69	18	↓	49	↓	↓	40.0	↓	122°	1,800
132	127,500	118	75	20	↓	55	↓	↓	44.5	↓	125°	2,180
144	280,000	128	81	22	↓	60	↓	↓	47.0	↓	124°	2,500
156	266,000	140	87	24	↓	66	↓	↓	51.6	↓	126°	2,730

*Table is in inches and pounds and degrees.

Notes

1. Horizontal vessels act as beams with the following exceptions:
   a. Loading conditions vary for full or partially full vessels.
   b. Stresses vary according to angle θ and distance "A."
   c. Load due to weight is combined with other loads.
2. Large-diameter, thin-walled vessels are best supported near the heads, provided the shell can take the load between the saddles. The resulting stresses in the heads must be checked to ensure the heads are stiff enough to transfer the load back to the saddles.
3. Thick-walled vessels are best supported where the longitudinal bending stresses at the saddles are about equal to the longitudinal bending at midspan. However, "A" should not exceed 0.2 L.
4. Minimum saddle angle $\theta = 120°$, except for small vessels. For vessels designed for external pressure only θ should always = 120°. The maximum angle is 168° if a wear plate is used.
5. Except for large L/R ratios or A > R/2, the governing stress is circumferential bending at the horn of the saddle. Weld seams should be avoided at the horn of the saddle.
6. A wear plate may be used to reduce stresses at the horn of the saddle *only* if saddles are near heads (A ≤ R/2), and the wear plate extends R/10 (5.73 deg.) above the horn of the saddle.
7. If it is determined that stiffening rings will be required to reduce shell stresses, move saddles away from the heads (preferable to A = 0.2 L). This will prevent designing a vessel with a flexible center and rigid ends. Stiffening ring sizes may be reduced by using a saddle angle of 150°.
8. An internal stiffening ring is the most desirable from a strength standpoint because the maximum stress in the shell is compressive, which is reduced by internal pressure. An internal ring may not be practical from a process or corrosion standpoint, however.
9. Friction factors:

Surfaces	*Friction Factor, μ*
Lubricated steel-to-concrete	0.45
Steel-to-steel	0.4
Lubrite-to-steel	
• Temperature over 500°F	0.15
• Temperature 500°F or less	0.10
• Bearing pressure less than 500 psi	0.15
Teflon-to-Teflon	
• Bearing 800 psi or more	0.06
• Bearing 300 psi or less	0.1

PROCEDURE 3-11

DESIGN OF SADDLE SUPPORTS FOR LARGE VESSELS [4, 15–17, 21]

Notation

A_s = cross-sectional area of saddle, in.^{2}
A_b = area of base plate, in.^{2}
A_f = projected area for wind, ft^2
A_p = pressure area on ribs, in.^{2}
A_r = cross-sectional area, rib, in.^{2}
Q = maximum load per saddle, lb
$Q_1 = Q_o + Q_R$, lb
$Q_2 = Q_o + Q_L$, lb
Q_o = load per saddle, operating, lb
Q_T = load per saddle, test, lb
Q_L = vertical load per saddle due to longitudinal loads, lb
Q_R = vertical load per saddle due to transverse loads, lb
F_L = maximum longitudinal force due to wind, seismic, pier deflection, etc. (see procedure 3-10 for detailed description)
F_a = allowable axial stress, psi (see App. L)
N = number of anchor bolts in the fixed saddle
a_t = cross-sectional area of bolts in tension, in.^{2}
Y = effective bearing length, in.
T = tension load in outer bolt, lb
n_1 = modular ratio, steel to concrete, use 10
F_b = allowable bending stress, psi
F_y = yield stress, psi
f_h = saddle splitting force, lb
f_a = axial stress, psi
f_b = bending stress, psi
f_u = unit force, lb/in.
B_p = bearing pressure, psi
M = bending moment, or overturning moment, in.-lb
I = moment of inertia, in.^{4}
Z = section modulus, in.^{3}
r = radius of gyration, in.
K_1 = saddle splitting coefficient

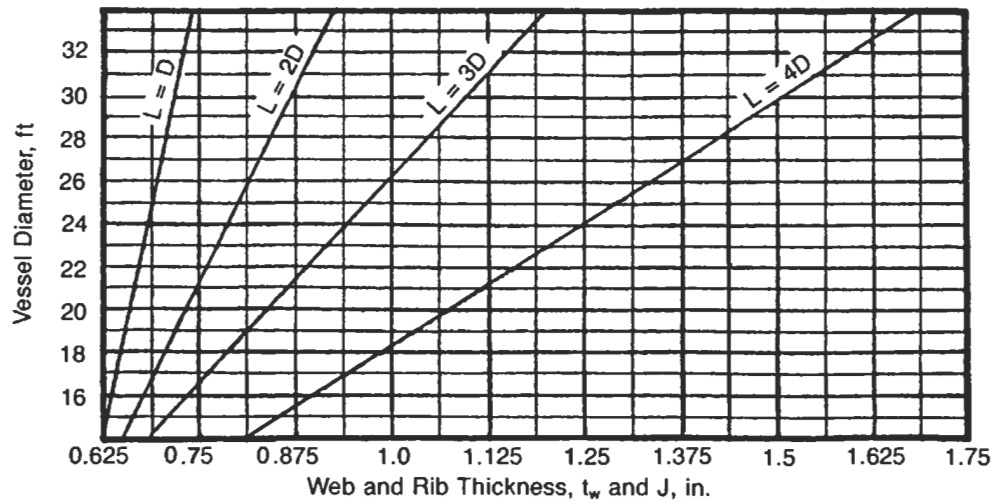

Figure 3-49. Graph for determining web and rib thicknesses.

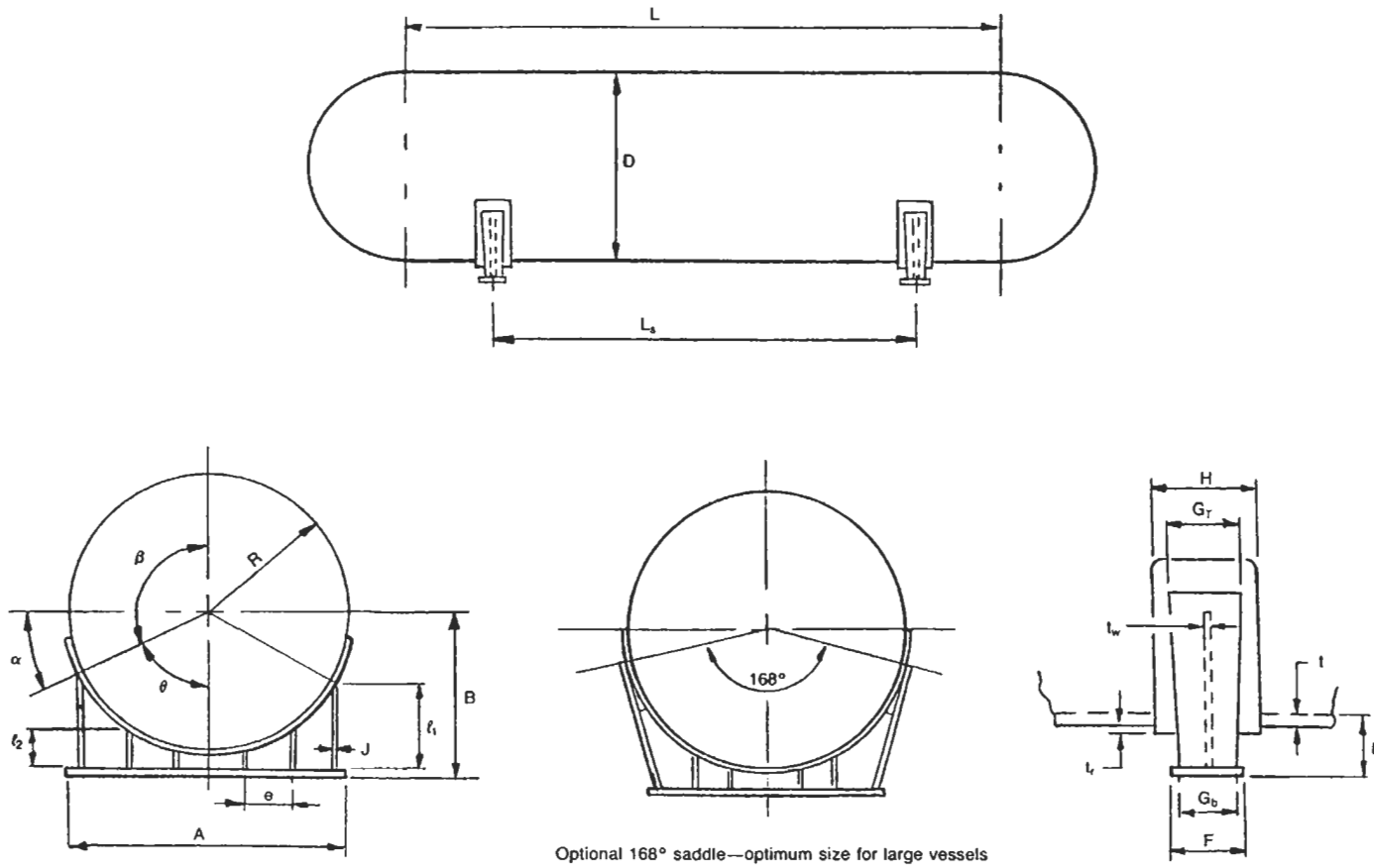

Figure 3-50. Dimensions of horizontal vessels and saddles.

n = number of ribs, including outer ribs, in one saddle
P = equivalent column load, lb
d = distance from base to centroid of saddle arc, in.
W_o = operating weight of vessel + contents, lb
W_T = vessel weight full of water, lb
σ_T = tension stress, psi
w = uniform load, lb

Forces and Loads

Vertical Load per Saddle

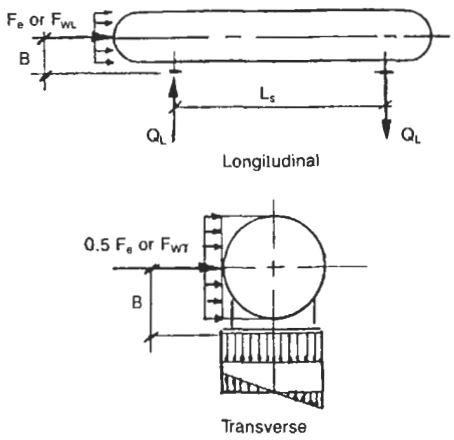

Figure 3-51. Saddle loadings.

For loads due to the following causes, use the given formulas.

- *Operating weight.*

$$Q_o = \frac{W_o}{2}$$

- *Test weight.*

$$Q_T = \frac{W_T}{2}$$

- *Longitudinal wind or seismic.*

$$Q_L = \frac{F_L B}{L_s}$$

- *Transverse wind or seismic.*

$$Q_R = \frac{3F_T B}{A}$$

Maximum Loads

- *Vertical.*

greater of Q_1, Q_2, or Q_T
$Q_1 = Q_o + Q_R$
$Q_2 = Q_o + Q_L$

- *Longitudinal.*

F_L = greater of F_{L1} through F_{L6}
(see procedure 3-10 for definitions)

Saddle Properties

- *Preliminary web and rib thicknesses, t_w and J.* From Figure 3-45:

$J = t_w$

- *Number of ribs required, n.*

$$n = \frac{A}{24} + 1$$

Round up to the nearest even number.

- *Minimum width of saddle at top, G_T, in.*

$$G_T = \sqrt{\frac{5.012F_L}{J(n-1)F_b}\left[h + \frac{A}{1.96}(1 - \sin\alpha)\right]}$$

where F_L and F_b are in kips and ksi or lb and psi, and J, h, A are in in.

- *Minimum wear plate dimensions.*

Width:

$$H = G_T + 1.56\sqrt{Rt_s}$$

Thickness:

$$t_r = \frac{(H - G_T)^2}{2.43R}$$

- *Moment of inertia of saddle, I.*

$$C_1 = \frac{\sum AY}{\sum A}$$
$$C_2 = h - C_1$$
$$I = \sum AY^2 + \sum I_o - C_1 \sum AY$$

- *Cross-sectional area of saddle (excluding shell).*

$$A_s = \sum A - A_1$$

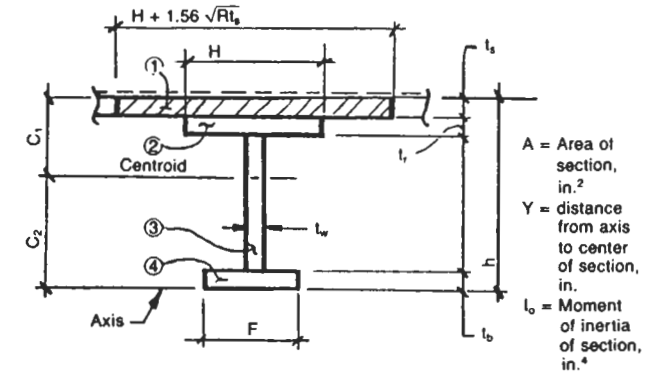

	A	Y	AY	AY²	I_o
①					
②					
③					
④					
Σ					

Note: I_o for rectangles = $\frac{bh^3}{12}$

Figure 3-52. Cross-sectional properties of saddles.

Design of Saddle Parts

Web

Web is in tension and bending as a result of saddle splitting forces. The saddle splitting forces, f_h, are the sum of all the horizontal reactions on the saddle.

- *Saddle coefficient.*

$$K_1 = \frac{1 + \cos\beta - 0.5\sin^2\beta}{\pi - \beta + \sin\beta\cos\beta}$$

Note: β is in radians. See Table 3-18.

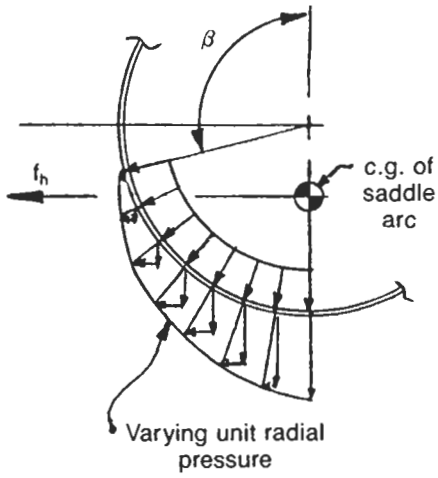

Figure 3-53. Saddle splitting forces.

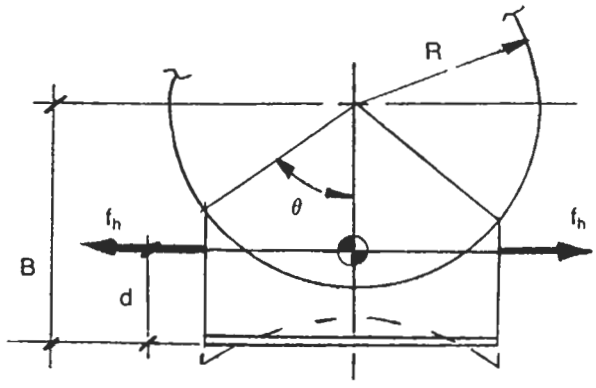

Note: Circumferential bending at horn is neglected for this calculation.

Figure 3-54. Bending in saddle due to splitting forces.

- *Saddle splitting force.*

$$f_h = K_1(Q \text{ or } Q_T)$$

- *Tension stress.*

$$\sigma_T = \frac{f_h}{A_s} < 0.6F_y$$

Note: For tension assume saddle depth "h" as R/3 maximum.

- *Bending moment.*

$$d = B - \frac{R\sin\theta}{\theta}$$

θ is in radians.

$$M = f_h d$$

- *Bending stress.*

$$f_b = \frac{MC_1}{I} < 0.66F_y$$

Table 3-27
Values of k_1

k_1	2θ
0.204	120°
0.214	126°
0.226	132°
0.237	138°
0.248	144°
0.260	150°
0.271	156°
0.278	162°
0.294	168°

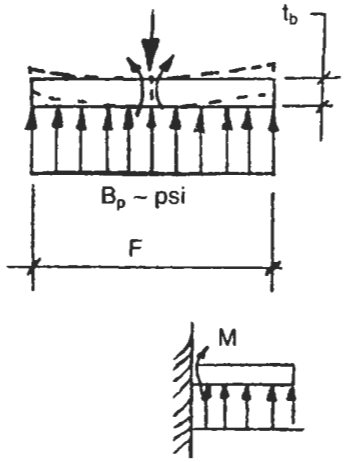

Figure 3-55. Loading diagram of base plate.

Base plate with center web

- *Area.*
  $A_b = AF$
- *Bearing pressure.*

$$B_p = \frac{Q}{A_b}$$

- *Base plate thickness.*

$$\text{Now } M = \frac{QF}{8}$$

$$Z = \frac{At_b^2}{6}$$

$$\text{and} \quad f_b = \frac{M}{Z} = \frac{3QF}{4At_b^2}$$

Therefore

$$t_b = \sqrt{\frac{3QF}{4AF_b}}$$

Assumes uniform load fixed in center.

Base plate analysis for offset web (see Figure 3-56)

- *Overall length,* $\sum L$.

$$\text{Web } L_w = A - 2d_1 - 2J$$
$$\text{ribs } L_r = n(G - t_w)$$
$$\sum L = L_w + L_r$$

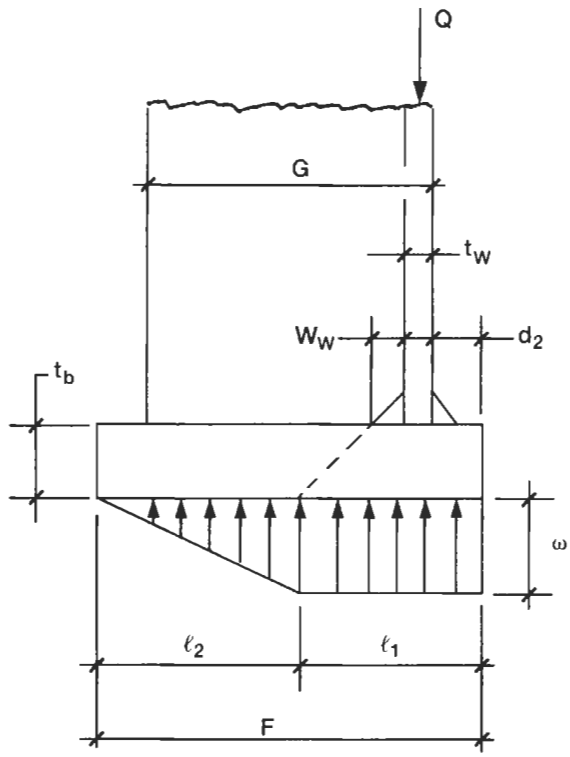

Figure 3-56. Load diagram and dimensions for base plate with an offset web.

- *Unit linear load, fu.*

$$fu = \frac{Q}{\sum L} \text{ lb/linear in.}$$

- *Distances* ℓ_1 *and* ℓ_2.

$$\ell_1 = d_2 + t_w + W_w + t_b$$
$$\ell_2 = F - \ell_1$$

- *Loads moment.*

$$\omega = \frac{fu}{\ell_1 + 0.5\ell_2}$$
$$M = \frac{\omega \ell_2^2}{6}$$

- *Bending stress,* f_b.

$$f_b = \frac{6M}{t_b^2}$$

Anchor Bolts

Anchor bolts are governed by one of the three following load cases:

1. *Longitudinal load:* If $Q_o > Q_L$, then no uplift occurs, and the minimum number and size of anchor bolts should be used.

   If $Q_o < Q_L$, then uplift does occur:

   $$\frac{Q_L - Q_o}{N} = \text{load per bolt}$$

2. *Shear:* Assume the fixed saddle takes the entire shear load.

   $$\frac{F_L}{N} = \text{shear per bolt}$$

3. *Transverse load:* This method of determining uplift and overturning is determined from Ref. 21 (see Figure 3-57).

   $$M = (0.5F_e \text{ or } F_{WT})B$$
   $$e = \frac{M}{Q_o}$$

   If $e < A/6$, then there is no uplift.

If $e \geq A/6$, then proceed with the following steps. This is an iterative procedure for finding the tension force, T, in the outermost bolt.

Step 1: Find the effective bearing length, Y. Start by calculating factors K_{1-3}.

$$K_1 = 3(e - 0.5A)$$
$$K_2 = \frac{6n_1a_t}{F}(f + e)$$
$$K_3 = (-)K_2\left[\frac{A}{2} + f\right]$$

Step 2: Substitute values of K_{1-3} into the following equation and assume a value of $Y = \frac{2}{3}A$ as a first trial.

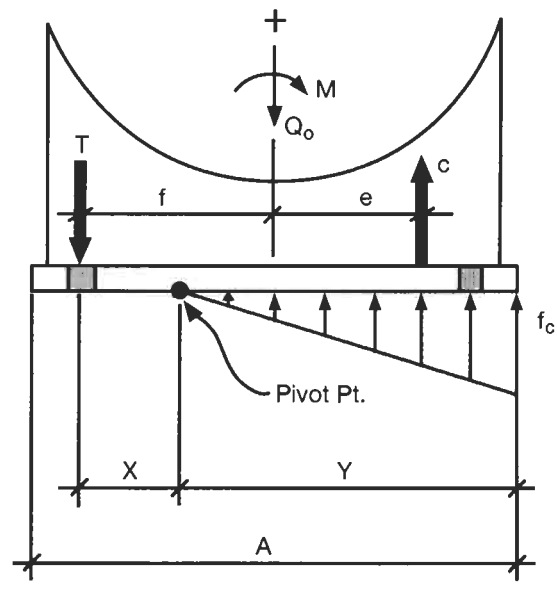

Figure 3-57. Dimensions and loading for base plate and anchor bolt analysis.

$$Y^3 + K_1Y^2 + K_2Y + K_3 = 0$$

If not equal to 0, then proceed with Step 3.

Step 3: Assume a new value of Y and recalculate the equation in Step 2 until the equation balances out to approximately 0. Once Y is determined, proceed to Step 4.

Step 4: Calculate the tension force, T, in the outermost bolt or bolts.

$$T = (-)Q_o\left[\frac{\frac{A}{2} - \frac{Y}{3} - e}{\frac{A}{2} - \frac{Y}{3} + f}\right]$$

Step 5: From Table 3-28, select an appropriate bolt material and size corresponding to tension force, T.

Step 6: Analyze the bending in the base plate.

$$\text{Distance, } x = 0.5A + f - Y$$
$$\text{Moment, } M = Tx$$
$$\text{Bending stress, } f_b = \frac{6M}{t_b^2}$$

Table 3-28
Allowable Tension Load on Bolts, Kips, per AISC

Nom. Bolt Dia., in.		5/8	3/4	7/8	1	1 1/8	1 1/4	1 3/8	1 1/2
Cross-sectional Area, a_b, in.^{2}		0.3068	0.4418	0.6013	0.7854	0.994	1.227	1.485	1.767
A-307	$F_t = 20$ ksi	6.1	8.8	12.0	15.7	19.9	24.5	29.7	35.3
A-325	$F_t = 44$ ksi	13.5	19.4	26.5	34.6	43.7	54.0	65.3	77.7

Ribs

Outside Ribs

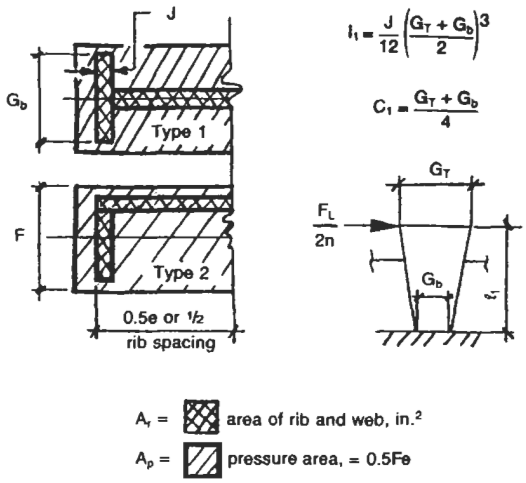

Figure 3-58. Dimensions of outside saddle ribs and webs.

Outside Ribs

- *Axial load, P.*

$$P = B_p A_p$$

- *Compressive stress, f_a.*

$$f_a = \frac{P}{A_r}$$

- *Radius of gyration, r.*

$$r = \sqrt{\frac{I_1}{A_r}}$$

- *Slenderness ratio, ℓ_1/r.*

$$\ell_1/r =$$
$$F_a = \text{(See App. L.)}$$

- *Unit force, f_u.*

$$f_u = \frac{F_L}{2A}$$

- *Bending moment, M.*

$$M = 0.5 f_u e \ell_1$$

- *Bending stress, $f_b = 0.66 F_Y$.*

$$f_b = \frac{MC_1}{I}$$

- *Combined stress.*

$$\frac{f_a}{F_a} + \frac{f_b}{F_b} < 1$$

Inside Ribs

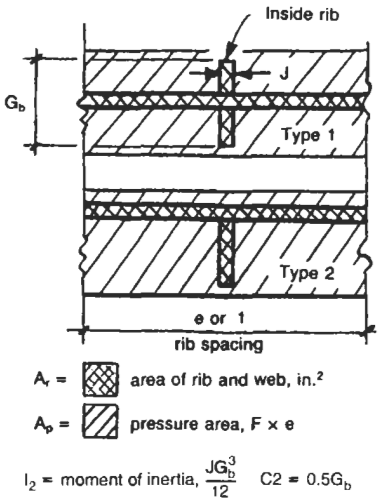

Figure 3-59. Dimensions of inside saddle ribs and webs.

- *Axial load, P.*

$$P = B_p A_p$$

- *Compressive stress, f_a.*

$$f_a = \frac{P}{A_r}$$

- *Radius of gyration, r.*

$$r = \sqrt{\frac{I_2}{A_r}}$$

- *Slenderness ratio, ℓ_2/r.*

$$\ell_2/r =$$
$$F_a =$$

- *Unit force, f_u.*

$$f_u = \frac{F_L}{2A}$$

- *Bending moment, M.*

$$M = f_u \ell_2 e$$

- *Bending stress, f_b.*

$$f_b = \frac{MC_2}{I}$$

- *Combined stress.*

$$\frac{f_a}{F_a} + \frac{f_b}{F_b} < 1$$

Notes

1. The depth of web is important in developing stiffness to prevent bending about the cross-sectional axis of the saddle. For larger vessels, assume 6 in. as the minimum depth from the bottom of the wear plate to the top of the base plate.
2. The full length of the web may be assumed effective in carrying compressive stresses along with ribs. Ribs are not effective at carrying compressive load if they are spaced greater than 25 times the web thickness apart.
3. Concrete compressive stresses are usually considered to be uniform. This assumes the saddle is rigid enough to distribute the load uniformly.
4. Large-diameter horizontal vessels are best supported with 168° saddles. Larger saddle angles do not effectively contribute to lower shell stresses and are more difficult to fabricate. The wear plate need not extend beyond center lines of vessel in any case or 6° beyond saddles.
5. Assume fixed saddle takes all of the longitudinal loading.

PROCEDURE 3-12

DESIGN OF BASE PLATES FOR LEGS [20, 21]

Notation

Y = effective bearing length, in.
M = overturning moment, in.-lb
M_b = bending moment, in.-lb
P = axial load, lb
f_t = tension stress in anchor bolt, psi
A = actual area of base plate, in.^{2}
A_r = area required, base plate, in.^{2}
f'_c = ultimate 28-day strength, psi
f_c = bearing pressure, psi
f_1 = equivalent bearing pressure, psi
F_b = allowable bending stress, psi
F_t = allowable tension stress, psi
F_c = allowable compression stress, psi
E_s = modulus of elasticity, steel, psi
E_c = modulus of elasticity, concrete, psi
n = modular ratio, steel-concrete
n' = equivalent cantilever dimension of base plate, in.
B_p = allowable bearing pressure, psi
$K_{1,2,3}$ = factor
T = tension force in outermost bolt, lb
C = compressive load in concrete, lb
V = base shear, lb
N = total number of anchor bolts
N_t = number of anchor bolts in tension
A_b = cross-sectional area of one bolt, in.^{2}
A_s = total cross-sectional area of bolts in tension, in.^{2}
α = coefficient
T_s = shear stress

Calculations

- *Axial loading only, no moment.*

Angle legs:

$$f_c = \frac{P}{BD}$$

L = greater of m, n, or n′

$$t = \sqrt{\frac{3f_c L^2}{F_b}}$$

Beam legs:

$$A_r = \frac{P}{0.7f'_c}$$

$$m = \frac{D - 0.95d}{2}$$

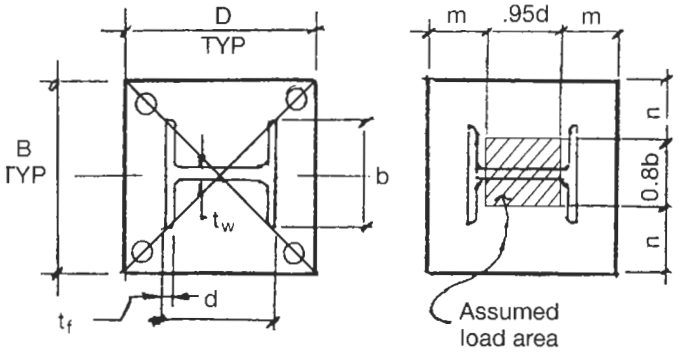

BEAM

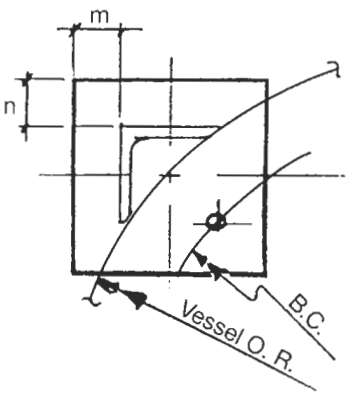

ANGLE

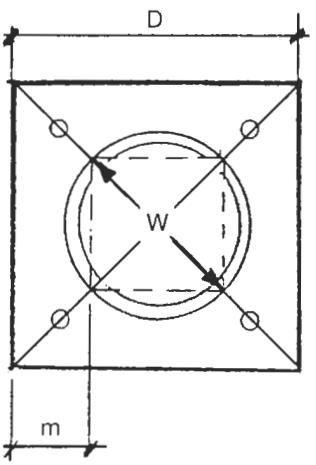

For pipe legs;

$$m = \frac{D - 0.707\,W}{2}$$

assume B = D

PIPE

Figure 3-60. Dimensions and loadings of base plates.

$$n = \frac{B - 0.8d}{2}$$

$$\alpha = \frac{b - t_w}{2(d - 2t_f)}$$

$$n' = \frac{b - t_w}{2}\sqrt{\frac{1}{1 + 3.2\alpha^3}}$$

or from Table 3-29

Pipe legs:

$$m = \frac{B - 0.707W}{2}$$

$$f_c = \frac{P}{A}$$

$$t = \sqrt{\frac{3f_c m^2}{F_b}}$$

- *Axial load plus bending, load condition #1, full compression, uplift, $e \leq D/6$.*

Eccentricity:

$$e = \frac{M}{P} \leq \frac{D}{6}$$

Loadings:

$$f_c = \frac{P}{A}\left[1 + \frac{6e}{D}\right]$$

$$f_1 = \frac{P}{A}\left[1 + \frac{6e(D - 2a)}{D^2}\right]$$

Moment:

$$M_b = \frac{a^2 B}{6}(f_1 + 2f_c)$$

Thickness:

$$t = \sqrt{\frac{6M_b}{BF_b}}$$

- *Axial load plus bending, load condition #2, partial compression, uplift, $e > D/6$.*

Eccentricity:

$$e = \frac{M}{P} > \frac{D}{6}$$

Load Condition #1

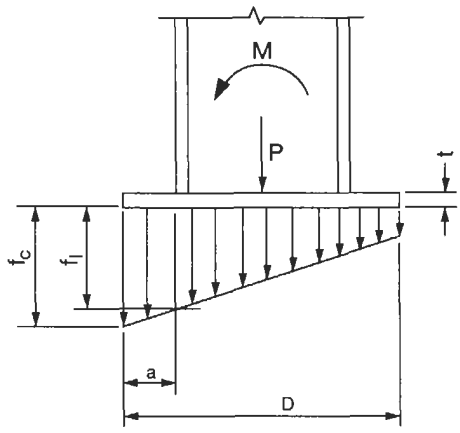

Full compression, no uplift, e ≤ D/6

Load Condition #2

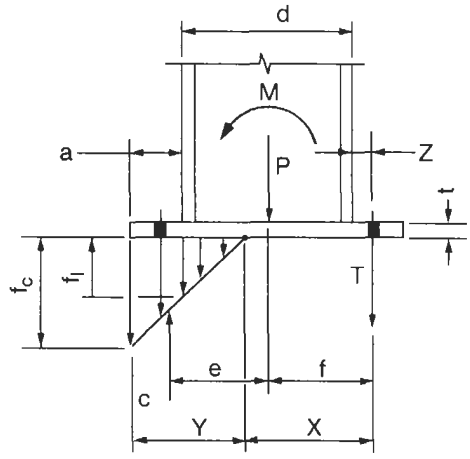

Partial compression, uplift, e > D/6

Figure 3-61. Load conditions on base plates.

Table 3-29
Values of n′ for Beams

Column Section	n′	Column Section	n′
W14 x 730 – W14 x 145	5.77	W10 x 45 – W10 x 33	3.42
W14 x 132 – W14 x 90	5.64	W8 x 67 – W8 x 31	3.14
W14 x 82 – W14 x 61	4.43	W8 x 28 – W8 x 24	2.77
W14 x 53 – W14 x 43	3.68	W6 x 25 – W6 x 15	2.38
W12 x 336 – W12 x 65	4.77	W6 x 16 – W6 x 9	1.77
W12 x 58 – W12 x 53	4.27	W5 x 19 – W5 x 16	1.91
W12 x 50 – W12 x 40	3.61	W4 x 13	1.53
W10 x 112 – W10 x 49	3.92		

Table 3-30
Average Properties of Concrete

Water Content/Bag	Ult f'_c 28-Day Str (psi)	Allowable Compression, F_c (psi)	Allowable B_p (psi)	Coefficient, n
7.5	2000	800	500	15
6.75	2500	1000	625	12
6	3000	1200	750	10
5	3750	1400	938	8

Reprinted by permission of John Wiley & Sons, Inc.

Coefficient:

$$n = \frac{E_s}{E_c} \text{ (see Table 3-30)}$$

Dimension:

$$f = 0.5d + z$$

By trial and error, determine Y, effective bearing length, utilizing factors $K_{1\text{-}3}$.

Factors:

$$K_1 = 3\left(e + \frac{D}{2}\right)$$

$$K_2 = \frac{6nA_s}{B}(f + e)$$

$$K_3 = (-)K_2(0.5D + f)$$

By successive approximations, determine distance Y. Substitute $K_{1\text{-}3}$ into the following equation and assume an initial value of $Y = \frac{2}{3}$ A as a first trial.

$$Y^3 + K_1Y^2 + K_2Y + K_3 = 0$$

Tension force:

$$T = (-)P\left[\frac{\frac{D}{2} - \frac{Y}{3} - e}{\frac{D}{2} - \frac{Y}{3} + f}\right]$$

Bearing pressure:

$$f_c = \frac{2(P + T)}{YB} < f'_c$$

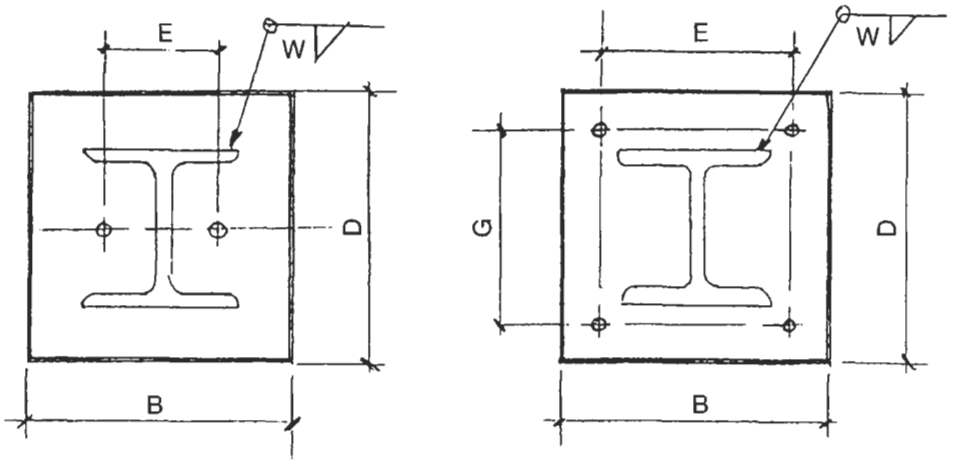

Type 1 Type 2

Figure 3-62. Dimensions for base plates-beams.

Dimensions for Type 1—(2) Bolt Base Plate

Column Size	D, in.	B, in.	E, in.	W, in.	Min Plate Thk, in.	Max Bolt ϕ, in.
W4	8	8	4	1/4	5/8	3/4
W6	8	8	4	1/4	3/4	3/4
W8	10	10	6	1/4	3/4	3/4
W10–33 thru 45	12	12	6	5/16	3/4	1
W10–49 thru 112	13	13	6	5/16	3/4	1
W12–40 thru 50	14	10	6	5/16	7/8	1
W12–53 thru 58	14	12	6	5/16	7/8	1
W12–65 thru 152	15	15	8	5/16	7/8	1 1/4

Dimensions for Type 2—(4) Bolt Base Plate

Column Size	D, in.	B, in.	G, in.	E, in.	W, in.	Min Plate Thk, in.	Max Bolt ϕ, in.
W4	10	10	7	7	1/4	5/8	1
W6	12	12	9	9	5/16	3/4	1
W8	15	15	11	11	3/8	3/4	1
W10–33 thru 45	17	15	13	11	3/8	7/8	1 1/4
W10–49 thru 112	17	17	13	13	3/8	7/8	1 1/4
W12–40 thru 50	19	15	15	11	3/8	1	1 1/2
W12–53 thru 58	19	17	15	13	3/8	1	1 1/2
W12–65 thru 152	19	19	15	15	3/8	1	1 1/2

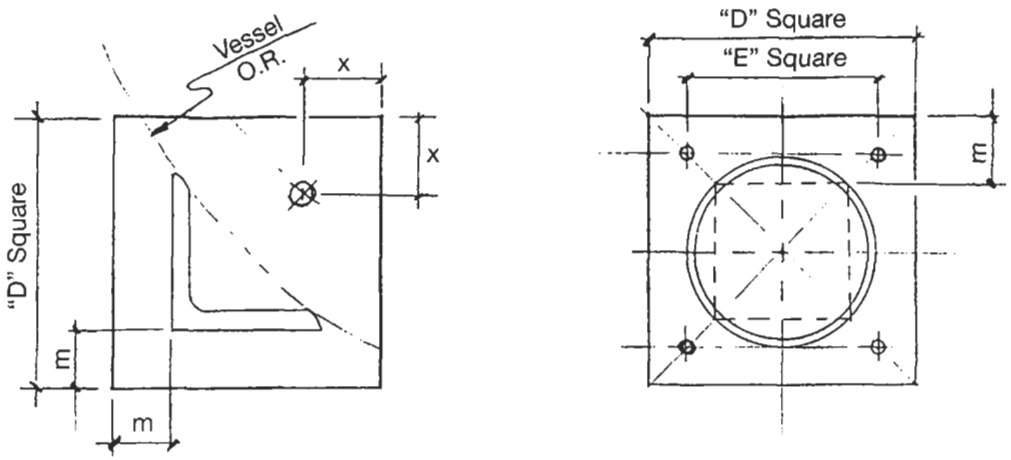

Angle Legs Pipe Legs

Figure 3-63. Dimensions for base plates—angle/pipe.

Dimensions for Angle Legs

Leg Size	D	X	m	Min. Plate Thk
L2 in. × 2 in.	4 in.	1.5	1	½ in.
L2½ in. × 2½ in.	5 in.	1.5	1.25	½ in.
L3 in. × 3 in.	6 in.	1.75	1.5	½ in.
L4 in. × 4 in.	8 in.	2	2	⅝ in.
L5 in. × 5 in.	9 in.	2.75	2	⅝ in.
L6 in. × 6 in.	10 in.	3.5	2	¾ in.

Dimensions for Pipe Legs

Leg Size	D	E	m	Min. Plate Thk
3 in. NPS	7½ in.	4½ in.	2.5 in.	½ in.
4 in. NPS	8½ in.	5½ in.	2.7 in.	½ in.
6 in. NPS	10 in.	7 in.	2.7 in.	⅝ in.
8 in. NPS	11½ in.	8½ in.	2.7 in.	¾ in.
10 in. NPS	14 in.	10 in.	3.2 in.	⅞ in.
12 in. NPS	16 in.	12 in.	3.5 in.	1 in.

Moment:

$$x = 0.5D + f - Y$$

$$M_t = Tx$$

$$f_1 = f_c\left(\frac{Y - a}{Y}\right)$$

$$M_c = \frac{a^2B}{6}(f_1 + 2f_c)$$

Thickness:

$$t = \sqrt{\frac{6M}{BF_b}}$$

where M is greater of M_T or M_c.

- *Anchor bolts.*

Without uplift: design anchor bolts for shear only.

$$T_s = \frac{V}{NA_b}$$

With uplift: design anchor bolts for full shear and tension force, T.

$$f_t = \frac{T}{N_T A_b}$$

PROCEDURE 3-13

DESIGN OF LUG SUPPORTS

Notation

Q = vertical load per lug, lb
Q_a = axial load on gusset, lb
Q_b = bending load on gusset, lb
n = number of gussets per lug
F_a = allowable axial stress, psi
F_b = allowable bending stress, psi
f_a = axial stress, psi
f_b = bending stress, psi
A = cross-sectional area of assumed column, in.^{2}
Z = section modulus, in.^{3}
w = uniform load on base plate, lb/in.
I = moment of inertia of compression plate, in.^{4}
E_v = modulus of elasticity of vessel shell at design temperature, psi
E_s = modulus of elasticity of compression plate at design temperature, psi
e = log base 2.71
M_b = bending moment, in.-lb
M_x = internal bending moment in compression plate, in.-lb
K = spring constant or foundation modulus
β = damping factor

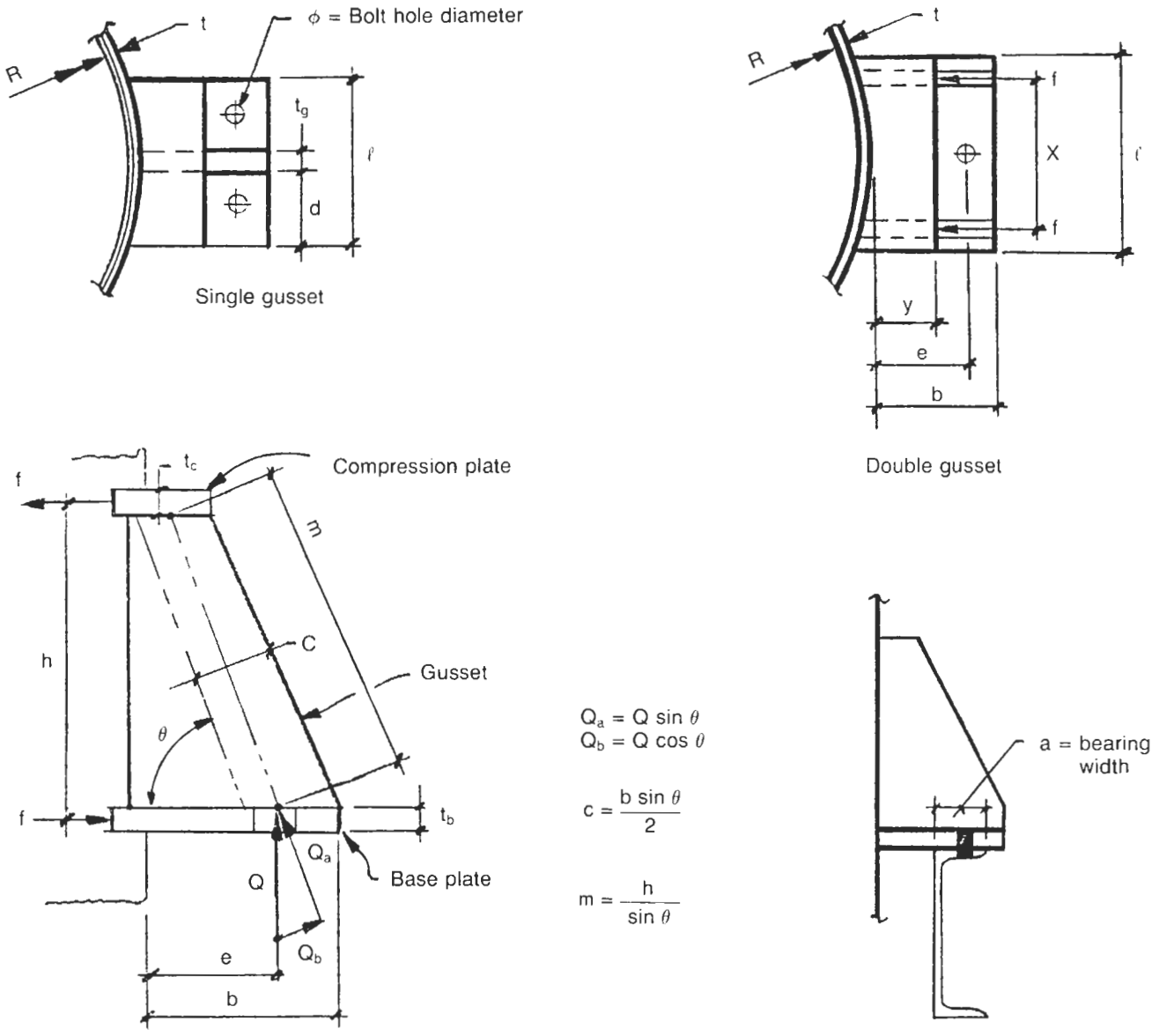

Figure 3-64. Dimensions and forces on a lug support.

Design of Gussets

Assume gusset thickness from Table 3-31.

$$Q_a = Q \sin \theta$$

$$Q_b = Q \cos \theta$$

$$C = \frac{b \sin \theta}{2}$$

$$A = t_g C$$

$$F_a = 0.4F_y$$

$$F_b = 0.6F_y$$

$$Z = \frac{t_g C^2}{6}$$

$$M_b = \frac{Q_b m}{n}$$

$$f_a = \frac{Q_a}{nA}$$

$$f_b = \frac{M_b}{Z}$$

Design of Base Plate

Single Gusset

- *Bending.* Assume to be a simply supported beam.

$$M_b = \frac{Ql}{4}$$

- *Bearing.*

$$w = \frac{Q}{al}$$

$$M_b = \frac{wd^2}{2}$$

- *Thickness required base plate.*

$$t_b = \sqrt{\frac{6M_b}{(b - \phi)F_b}}$$

where M_b is greater moment from bending or bearing.

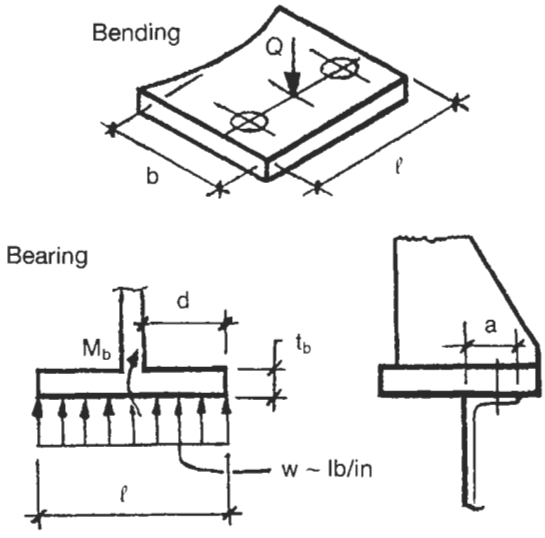

Figure 3-65. Loading diagram of base plate with one gusset.

Double Gusset

- *Bending.* Assume to be between simply supported and fixed.

$$M_b = \frac{Ql}{6}$$

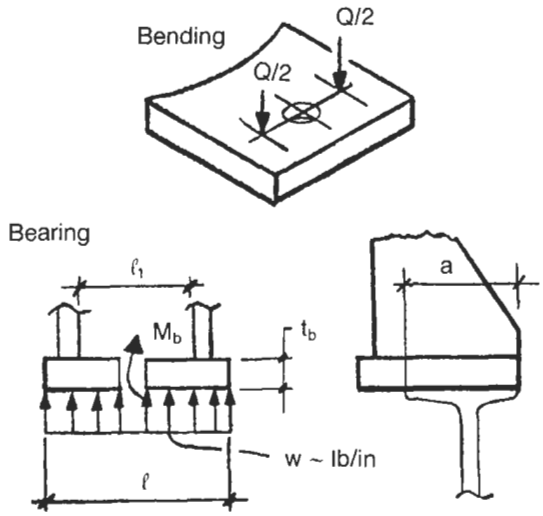

Figure 3-66. Loading diagram of base plate with two gussets.

- *Bearing.*

$$w = \frac{Q}{al}$$

$$M_b = \frac{wl_1^2}{10}$$

- *Thickness required base plate.*

$$t_b = \sqrt{\frac{6M_b}{(b - \phi)F_b}}$$

where M_b is greater moment from bending or bearing.

Compression Plate

Single Gusset

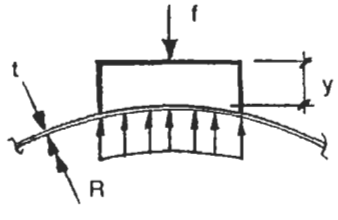

Figure 3-67. Loading diagram of compression plate with one gusset.

$$f = \frac{Qe}{h}$$

$$K = \frac{E_v t}{R^2}$$

Assume thickness t_c and calculate I and Z:

$$I = \frac{t_c y^3}{12}$$

$$Z = \frac{t_c y^2}{6}$$

$$\beta = \sqrt[4]{\frac{K}{4E_s I}}$$

$$M_x = \frac{f}{4\beta}$$

$$f_b = \frac{M_x}{Z} \quad < 0.6F_y$$

Note: These calculations are based on a beam on elastic foundation methods.

Double Gusset

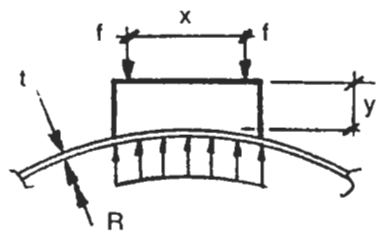

Figure 3-68. Loading diagram of compression plate with two gussets.

$$f = \frac{Qe}{2h}$$

$$K = \frac{E_v t}{R^2}$$

$$I = \frac{t_c y^3}{12}$$

$$Z = \frac{t_c y^2}{6}$$

$$\beta = \sqrt[4]{\frac{K}{4E_s I}}$$

$$M_x = \frac{f}{4\beta}[1 + (e^{-\beta x}(\cos \beta x - \sin \beta x))]$$

βx is in radians. See Procedure 5-2.

$$f_b = \frac{M_x}{Z} < 0.6F_y$$

Table 3-31
Standard Lug Dimensions

Type	e	b	y	x	h	$t_g = t_b$	Capacity (b)
1	4	6	2	6	6	3/8	23,500
2	4	6	2	6	9	7/16	45,000
3	4	6	2	6	12	1/2	45,000
4	5	7	2.5	7	15	9/16	70,000
5	5	7	2.5	7	18	5/8	70,000
6	5	7	2.5	7	21	11/16	70,000
7	6	8	3	8	24	3/4	100,000

PROCEDURE 3-14

DESIGN OF BASE DETAILS FOR VERTICAL VESSELS #1

[5, 10, 14, 18, 19]

Notation

A_b = required area of anchor bolts, in.^{2}
B_d = anchor bolt diameter, in.
B_p = allowable bearing pressure, psi (see Table 3-35)
b_p = bearing stress, psi
C = compressive load on concrete, lb
d = diameter of bolt circle, in.
d_b = diameter of hole in base plate of compression plate or ring, in.
F_{LT} = longitudinal tension load, lb/in.
F_{LC} = longitudinal compression load, lb/in.
F_b = allowable bending stress, psi
F_c = allowable compressive stress, concrete, psi (see Table 3-35)
F_s = allowable tension stress, anchor bolts, psi (see Table 3-33)
F_y = minimum specified yield strength, psi
f_b = bending stress, psi
f_c = compressive stress, concrete, psi
f_s = equivalent tension stress in anchor bolts, psi
M_b = overturning moment at base, in.-lb
M_t = overturning moment at tangent line, in.-lb
M_x = unit bending moment in base plate, circumferential, in.-lb/in.
M_y = unit bending moment in base plate, radial, in.-lb/in.
H = overall vessel height, ft
δ = vessel deflection, in. (see Procedure 4-4)
M_o = bending moment per unit length in.-lb/in.
N = number of anchor bolts
n = ratio of modulus of elasticity of steel to concrete (see Table 3-35)
P = maximum anchor bolt force, lb
P_1 = maximum axial force in gusset, lb
E = joint efficiency of skirt-head attachment weld
R_a = root area of anchor bolt, in.^{2} (see Table 3-32)
r = radius of bolt circle, in.
W_b = weight of vessel at base, lb
W_t = weight of vessel at tangent line, lb
w = width of base plate, in.
Z_1 = section modulus of skirt, in.^{3}
S_t = allowable stress (tension) of skirt, psi
S_c = allowable stress (compression) of skirt, psi
G = width of unreinforced opening in skirt, in.
C_c,C_T,J,Z,K = coefficients (see Table 3-38)
γ_1,γ_2 = coefficients for moment calculation in compression ring
S = code allowable stress, tension, psi
E_1 = modulus of elasticity, psi
t_s = equivalent thickness of steel shell which represents the anchor bolts in tension, in.
T = tensile load in steel, lb
ν = Poisson's ratio, 0.3 for steel
B = code allowable longitudinal compressive stress, psi

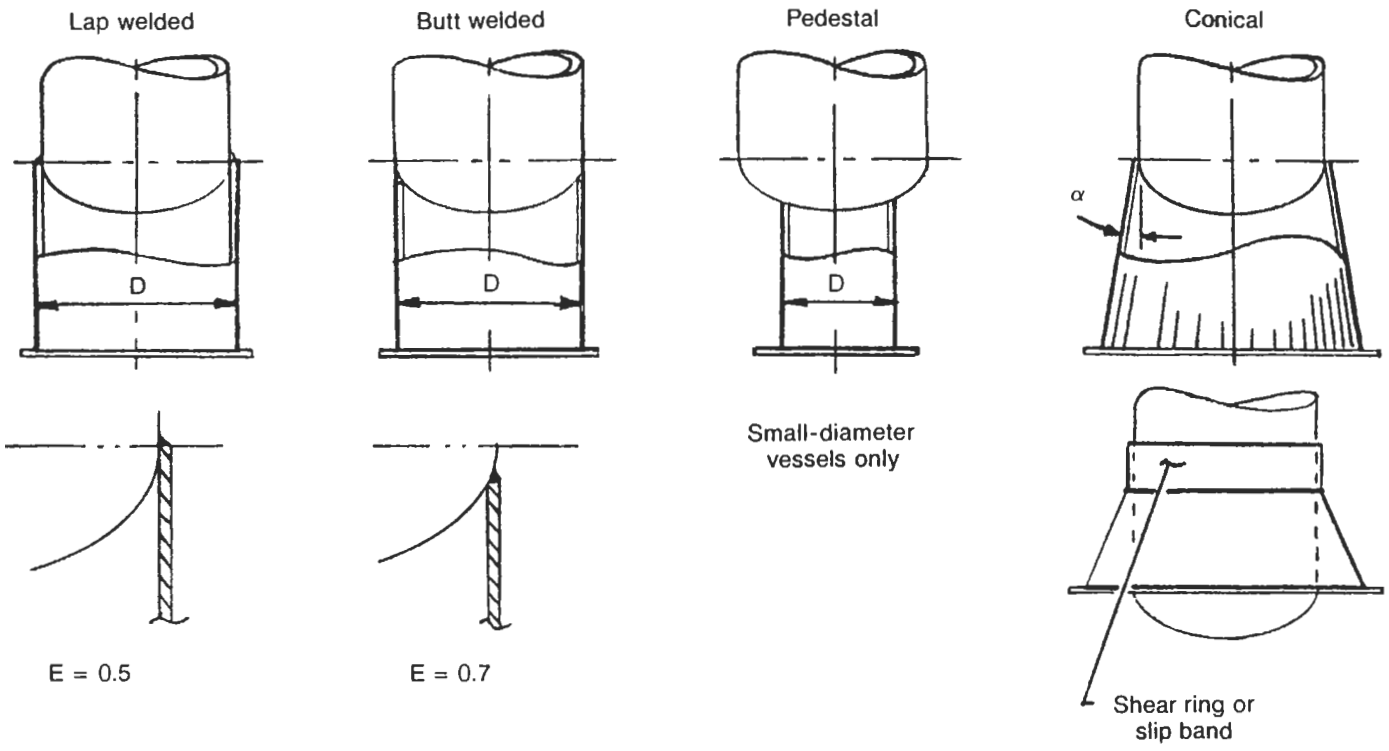

Figure 3-69. Skirt types.

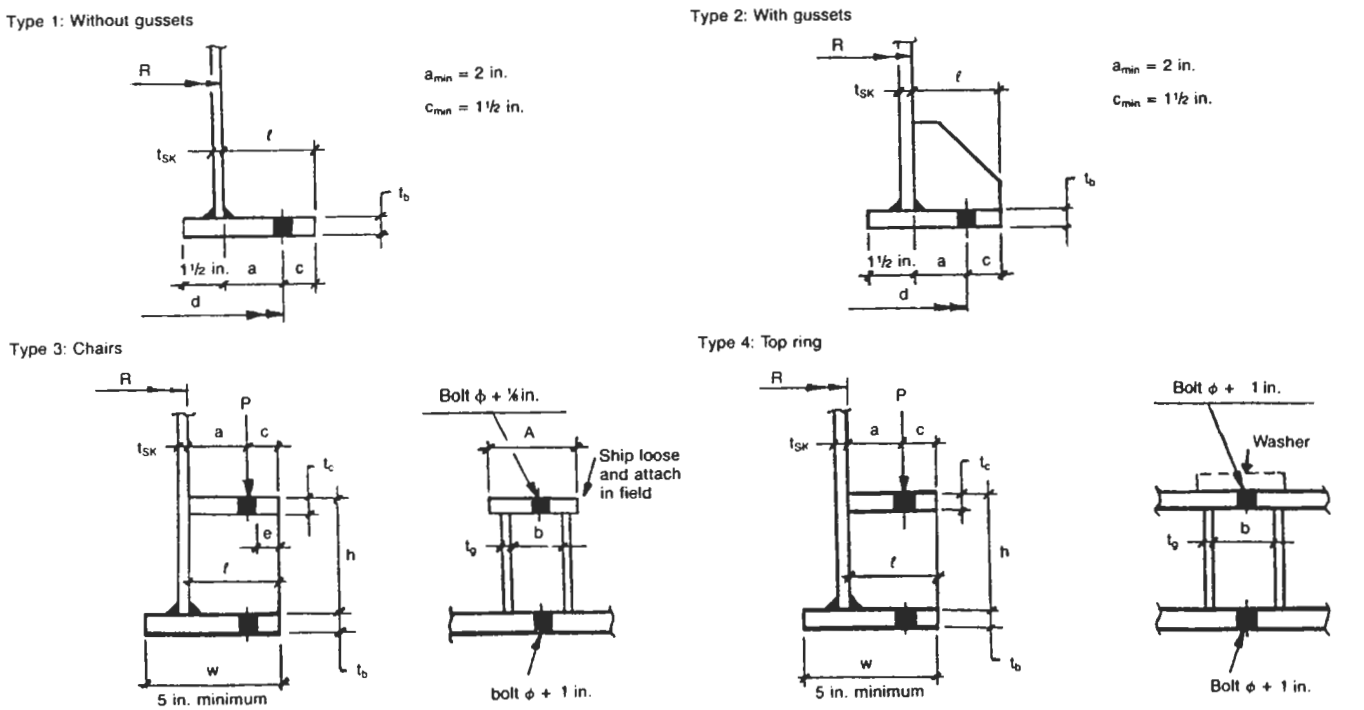

Figure 3-70. Base details of various types of skirt-supported vessels.

Table 3-32
Bolt Chair Data

Size (in.)	A_{min}	R_a	a_{min}	b	c_{min}
¾–10	5.50	0.302	2	3.50	1.5
⅞–9	5.50	0.419	2	3.50	1.5
1–8	5.50	0.551	2	3.50	1.5
1⅛–7	5.50	0.693	2	3.50	1.5
1¼–7	5.50	0.890	2	3.50	1.5
1⅜–6	5.50	1.054	2.13	3.50	1.75
1½–6	5.75	1.294	2.25	3.50	2
1⅝–5½	5.75	1.515	2.38	4.00	2
1¾–5	6.00	1.744	2.5	4.00	2.25
1⅞–5	6.25	2.049	2.63	4.00	2.5
2–4½	6.50	2.300	2.75	4.00	2.5
2¼–4½	7.00	3.020	3	4.50	2.75
2½–4	7.25	3.715	3.25	4.50	3
2¾–4	7.50	4.618	3.50	4.75	3.25
3–4	8.00	5.621	3.75	5.00	3.50

Table 3-33
Number of Anchor Bolts, N

Skirt Diameter (in.)	Minimum	Maximum
24–36	4	4
42–54	4	8
60–78	8	12
84–102	12	16
108–126	16	20
132–144	20	24

Table 3-34
Allowable Stress for Bolts, F_s

Spec	Diameter (in.)	Allowable Stress (KSI)
A-307	All	20.0
A-36	All	19.0
A-325	< 1-1/2″	44.0
A-449	< 1″	39.6
	1-1/8″ to 1-1/2″	34.7
	1-5/8″ to 3″	29.7

Table 3-35
Average Properties of Concrete

Water Content/Bag	Ult 28-Day Str (psi)	Allowable Compression, F_c (psi)	Allowable B_p (psi)	Coefficient, n
7.5	2000	800	500	15
6.75	2500	1000	625	12
6	3000	1200	750	10
5	3750	1400	938	8

Reprinted by permission of John Wiley & Sons, Inc.

Table 3-36
Bending Moment Unit Length

ℓ/b	$M_x\begin{pmatrix}x=0.5b\\y=\ell\end{pmatrix}$	$M_y\begin{pmatrix}x=.5b\\y=0\end{pmatrix}$
0	0	$-0.5f_c\ell^2$
0.333	$0.0078f_cb^2$	$-0.428f_c\ell^2$
0.5	$0.0293f_cb^2$	$-0.319f_c\ell^2$
0.667	$0.0558f_cb^2$	$-0.227f_c\ell^2$
1.0	$0.0972f_cb^2$	$-0.119f_c\ell^2$
1.5	$0.123f_cb^2$	$-0.124f_c\ell^2$
2.0	$0.131f_cb^2$	$-0.125f_c\ell^2$
3.0	$0.133f_cb^2$	$-0.125f_c\ell^2$
∞	$0.133f_cb^2$	$-0.125f_c\ell^2$

Reprinted by permission of John Wiley & Sons, Inc.

Table 3-37
Constant for Moment Calculation, γ_1 and γ_2

b/ℓ	γ_1	γ_2
1.0	0.565	0.135
1.2	0.350	0.115
1.4	0.211	0.085
1.6	0.125	0.057
1.8	0.073	0.037
2.0	0.042	0.023
∞	0	0

Reprinted by permission of John Wiley & Sons, Inc.

Table 3-38
Values of Constants as a Function of K

K	C_c	C_t	J	Z	K	C_c	C_t	J	Z
0.1	0.852	2.887	0.766	0.480	0.55	2.113	1.884	0.785	0.381
0.15	1.049	2.772	0.771	0.469	0.6	2.224	1.765	0.784	0.369
0.2	1.218	2.661	0.776	0.459	0.65	2.333	1.640	0.783	0.357
0.25	1.370	2.551	0.779	0.448	0.7	2.442	1.510	0.781	0.344
0.3	1.510	2.442	0.781	0.438	0.75	2.551	1.370	0.779	0.331
0.35	1.640	2.333	0.783	0.427	0.8	2.661	1.218	0.776	0.316
0.4	1.765	2.224	0.784	0.416	0.85	2.772	1.049	0.771	0.302
0.45	1.884	2.113	0.785	0.404	0.9	2.887	0.852	0.766	0.286
0.5	2.000	2.000	0.785	0.393	0.95	3.008	0.600	0.760	0.270

Reprinted by permission of John Wiley & Sons, Inc.

ANCHOR BOLTS: EQUIVALENT AREA METHOD

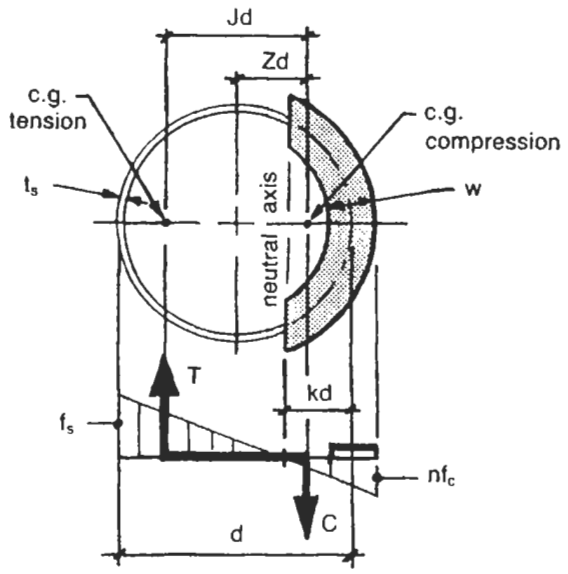

PROCEDURE

1. Calculate preliminary K value based on allowables.
2. Make preliminary selection of anchor bolts and width of base plate.
3. Calculate loads and stresses.
4. Calculate K based on actual stresses and compare with value computed in Step 2.
5. If difference exceeds .01, select a new K between both values and repeat Steps 2–8. (See Note 6.)

TRIAL 1				TRIAL 2	
1 Data				**1 Data**	
F_a (Table 3-35)		M_b			
F_c (Table 3-36)		d			
n (Table 3-36)		r			
W_b					
2 Approximate K Using Allowables		**Coefficients**		**2 Approximate K Using Allowables**	
$K = \frac{1}{1 + \frac{F_s}{nF_c}}$		C_c			
		C_t			
		J			
		Z			
3 Tensile Load in Steel				**3 Tensile Load in Steel**	
$T = \frac{M_b - W_b(Zd)}{Jd}$					
4 Number of Anchor Bolts Required				**4 Number of Anchor Bolts Required**	
$A_b = \frac{T\pi d}{F_a r C_t}$		R_a (Table 3-33)	in.^{2}		
A_b/N		Use ( )	bolts		
5 Stress in Equivalent Steel Band				**5 Stress in Equivalent Steel Band**	
$t_s = \frac{NR_a}{\pi d}$		$f_s = \frac{T}{t_s r C_t}$			
6 Compressive Load in Concrete				**6 Compressive Load in Concrete**	
$C = T + W_b$					
7 Stress in Concrete				**7 Stress in Concrete**	
$f_c = \frac{C}{[(w - t_s) + nt_s]rC_c}$					
8 Recheck K Using Actual f_s and f_c				**8 Recheck K Using Actual f_s and f_c**	
$K = \frac{1}{1 + \frac{f_s}{nf_c}}$					

See example of completed form on next page.

ANCHOR BOLTS: EQUIVALENT AREA METHOD EXAMPLE

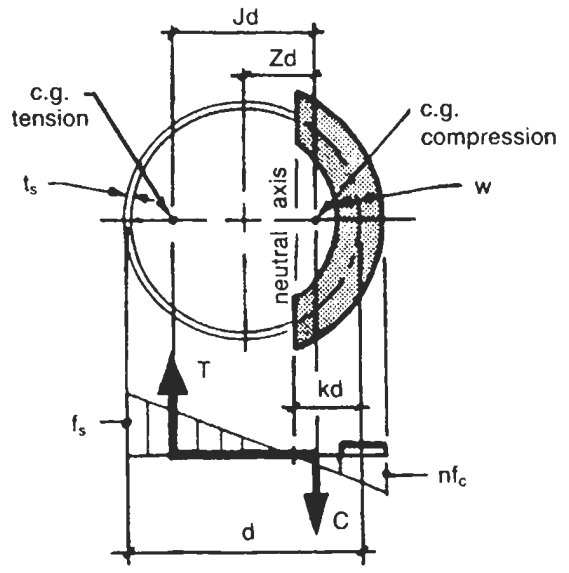

PROCEDURE

1. Calculate preliminary K value based on allowables.
2. Make preliminary selection of anchor bolts and width of base plate.
3. Calculate loads and stresses.
4. Calculate K based on actual stresses and compare with value computed in Step 2.
5. If difference exceeds .01, select a new K between both values and repeat Steps 2–8. (See Note 6.)

TRIAL 1				TRIAL 2
1 Data				**1 Data**
F_s (Table 3-35)	= 15 KSI	M_b = 3034 FT-KIPS		USE W = 8.25" and K = .34
F_c (Table 3-36)	= 1.2 KSI	d = 8.75' or 105"		
n (Table 3-36)	= 10	r = 4.38' or 52.5"		
W_b	= 194 KIPS			
2 Approximate K Using Allowables		**Coefficients**		**2 Approximate K Using Allowables**
$K = \frac{1}{1 + \frac{F_s}{nF_c}}$	= .444	C_c = 1.884		K = .34
		C_t = 2.113		C_c = 1.610 J = .7826
		J = .785		C_t = 2.355 Z = .429
		Z = .404		
3 Tensile Load in Steel				**3 Tensile Load in Steel**
$T = \frac{M_b - W_b(Zd)}{Jd}$	$= \frac{3034 - 194(.404)8.75}{.785(8.75)} = 341^K$			336.7^K
4 Number of Anchor Bolts Required				**4 Number of Anchor Bolts Required**
$A_b = \frac{T \pi d}{F_s r C_t}$	$= \frac{341\,\pi\,8.75}{15(4.38)2.113} = 67.5\ in^2$	R_a (Table 3-33)	= 3.715 in.²	$\frac{336.7\,\pi\,8.75}{15(4.36)2.355} = \frac{59.82}{20} = 2.99\ in^2$
A_b/N = 67.5/20 = 3.37		Use (20)	2½" ϕ bolts	59.82 USE (20) 2½" ϕ BOLTS
5 Stress in Equivalent Steel Band				**5 Stress in Equivalent Steel Band**
$t_s = \frac{NR_a}{\pi d}$	$= \frac{20(3.715)}{\pi\ 105} = .225$	$f_s = \frac{T}{t_s r C_t}$	$= \frac{341}{.225(52.5)2.113} = 13.66$ KSI < 15 KSI OK	$t_s = .225$ $f_s = \frac{336.7}{.225(52.5)2.355} = 12.10$ OK
6 Compressive Load in Concrete				**6 Compressive Load in Concrete**
$C = T + W_b$	$= 341 + 194 = 535^K$			$C = 336.7 + 194 = 530.7^K$
7 Stress in Concrete				**7 Stress in Concrete**
$f_c = \frac{C}{[(w - t_s) + nt_s]rC_c}$	$= \frac{535}{[(10 - .225) + 2.25]52.5(1.884)} = .449$ KSI			$f_c = \frac{530.7}{10.275(52.5)1.61} = .611$ KSI
8 Recheck K Using Actual f_s and f_c				**8 Recheck K Using Actual f_s and f_c**
$K = \frac{1}{1 + \frac{f_s}{nf_c}}$	$= \frac{1}{1 + \frac{13.66}{10(.449)}} = .247 \neq .444$ NO GOOD!			$K = \frac{1}{1 + \frac{12.10}{10(.611)}} = .336$ OK $\approx .34$

Base Plate

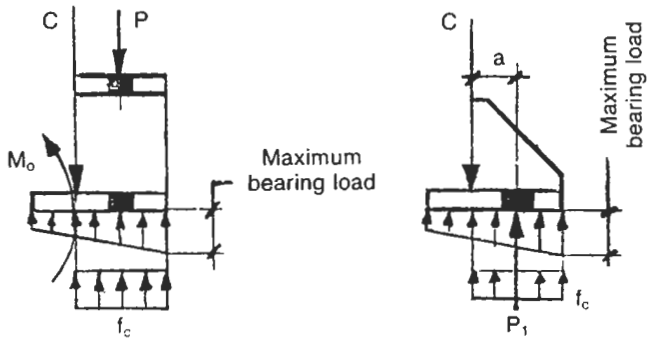

Figure 3-71. Loading diagram of base plate with gussets and chairs.

Type 1: Without Chairs or Gussets

K = from "Anchor Bolts."
ℓ =
f_c = from "Anchor Bolts."
d =

- *Bending moment per unit length.*

$$M_o = 0.5 f_c l^2$$

- *Maximum bearing load.*

$$b_p = f_c\left(\frac{2Kd + w}{2Kd}\right) < B_p \text{ (see Table 3-35)}$$

- *Thickness required.*

$$t_b = \sqrt{\frac{6M_o}{F_b}}$$

Type 2: With Gussets Equally Spaced, Straddling Anchor Bolts

- *With same number as anchor bolts.*

$$b = \frac{\pi d}{N}$$
$$\frac{\ell}{b}$$

M_o = greater of M_x or M_y from Table 3-36

$$t_b = \sqrt{\frac{6M_o}{F_b}}$$

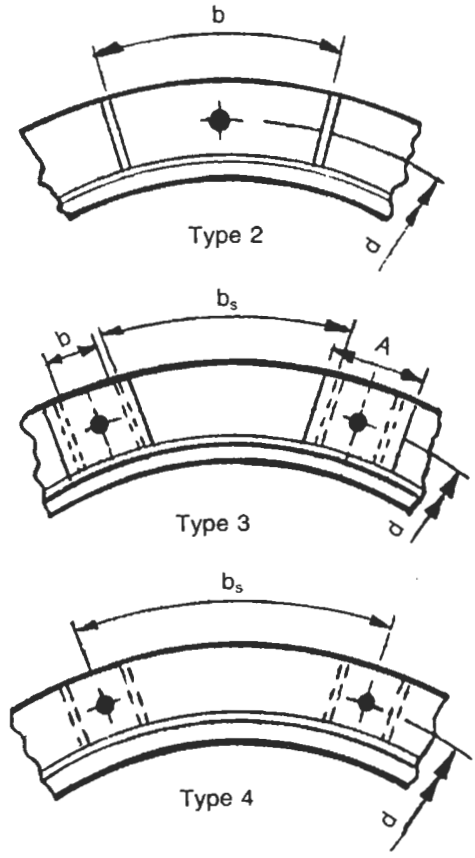

Figure 3-72. Dimensions of various base plate configurations.

- *With twice as many gussets as anchor bolts.*

$$b = \frac{\pi d}{2N}$$
$$\frac{\ell}{b}$$

M_o = greater of M_x or M_y from Table 3-36

$$t_b = \sqrt{\frac{6M_o}{F_b}}$$

Type 3 or 4: With Anchor Chairs or Full Ring

- *Between gussets.*

$$P = F_s R_a$$
$$M_o = \frac{Pb}{8}$$
$$t_b = \sqrt{\frac{6M_o}{(w - d_b)F_b}}$$

- *Between chairs.*

$$\frac{\ell}{b_s}$$

M_o = greater of M_x or M_y from Table 3-36

$$t_b = \sqrt{\frac{6M_o}{F_b}}$$

Top Plate or Ring (Type 3 or 4)

- *Minimum required height of anchor chair (Type 3 or 4).*

$$h_{min} = \frac{7.29\delta d}{H} < 18\,\text{in.}$$

- *Minimum required thickness of top plate of anchor chair.*

$$t_c = \sqrt{\frac{P}{F_b e}(0.375b - 0.22d_b)}$$

Top plate is assumed as a beam, e × A with partially fixed ends and a portion of the total anchor bolt force P/3, distributed along part of the span. (See Figure 3-73.)

- *Bending moment, M_o, in top ring (Type 4).*

$$\frac{b}{\ell}$$

γ_1 = (see Table 3-37)
γ_2 = (see Table 3-37)

1. If $a = \ell/2$ and $b/\ell > 1$, M_y governs

$$M_o = \frac{P}{4\pi}\left[(1+\nu)\log\left(\frac{2\ell}{\pi g}\right) + (1-\gamma_1)\right]$$

2. If $a \neq \ell/2$ but $b/\ell > 1$, M_y governs

$$M_o = \frac{P}{4\pi}\left[(1+\nu)\log\left(\frac{2\ell \sin\frac{\pi a}{\ell}}{\pi g}\right) + 1\right] - \frac{\gamma_1 P}{4\pi}$$

3. If $b/\ell < 1$, invert b/ℓ and rotate axis X-X and Y-Y 90°

$$M_o = \frac{P}{4\pi}\left[(1+\nu)\log\left(\frac{2\ell \sin\frac{\pi a}{\ell}}{\pi g}\right) + 1\right] - \left[(1-\nu-\gamma_2)\frac{P}{4\pi}\right]$$

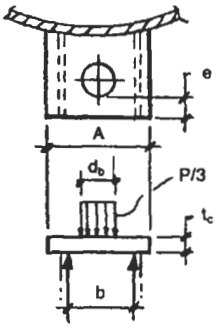

Figure 3-73. Top plate dimensions and loadings.

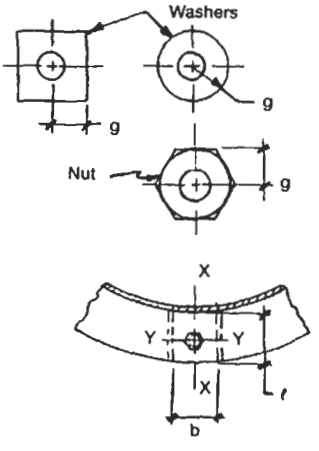

Figure 3-74. Compression plate dimensions.

- *Minimum required thickness of top ring (Type 4).*

$$t_c = \sqrt{\frac{6M_o}{F_b}}$$

Gussets

- *Type 2.* Assume each gusset shares load with each adjoining gusset. The uniform load on the base is f_c, and the area supported by each gusset is $\ell \times b$. Therefore the load on the gusset is

$P_1 = f_c \ell b$

Thickness required is

$$t_g = \frac{P_1(6a - 2\ell)}{F_b \ell^2}$$

- *Type 3 or 4.*

$$t_g = \frac{P}{18{,}000\,\ell} > \frac{3}{8}\,\text{in.}$$

Skirt

- *Thickness required in skirt at compression plate or ring due to maximum bolt load reaction.*

For Type 3:

$$Z = \frac{1.0}{\frac{1.77\,At_b}{\sqrt{Rt_{sk}}}\left[\frac{t_b}{t_{sk}}\right]^2 + 1}$$

$$S = \frac{Pa}{t_{sk}^2}\left[\frac{1.32Z}{\frac{1.43Ah^2}{Rt_{sk}} + [4Ah^2]^{0.333}} + \frac{0.031}{\sqrt{Rt_{sk}}}\right] < 25\,\text{ksi}$$

For Type 4:

Consider the top compression ring as a uniform ring with N number of equally spaced loads of magnitude.

$$\frac{Pa}{h}$$

See Procedure 5-1 for details.
The moment of inertia of the ring may include a portion of the skirt equal to $16t_{sk}$ on either side of the ring (see Figure 3-75).

- *Thickness required at opening of skirt.*

Note: If skirt is stiffened locally at the opening to compensate for lost moment of inertia of skirt cross section, this portion may be disregarded.

G = width of opening, in.

$$f_b = \frac{1}{\pi D - 3G}\left[\frac{48\,M_b}{D} + W_b\right]$$

Actual weights and moments at the elevation of the opening may be substituted in the foregoing equation if desired.

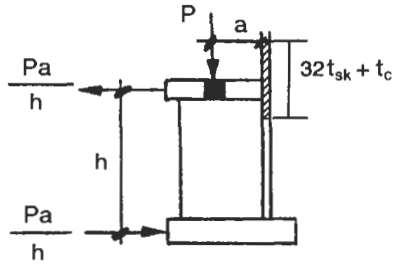

Figure 3-75. Dimensions and loadings on skirt due to load P.

Skirt thickness required:

$$t_{sk} = \frac{f_b}{8F_y} \quad \text{or} \quad \sqrt{\frac{f_b}{4{,}640{,}000}}$$

whichever is greater

- *Determine allowable longitudinal stresses.*

Tension

S_t = lesser of $0.6F_y$ or $1.33S$

Compression

$$S_c = 0.333\,F_y$$
$$= 1.33 \times \text{factor "B"}$$
$$= \frac{t_{sk}E_1}{16\,R}$$
$$= 1.33S$$

whichever is less.

Longitudinal forces

$$F_{LT} = \frac{48\,M_b}{\pi D^2} - \frac{W_b}{\pi D}$$
$$F_{LC} = (-)\frac{48M_b}{\pi D^2} - \frac{W_b}{\pi D}$$

Skirt thickness required

$$t_{sk} = \frac{F_{LT}}{S_t} \quad \text{or} \quad \frac{F_{LC}}{S_c}$$

whichever is greater.

- *Thickness required at skirt-head attachment due to M_t.*

Longitudinal forces

$$F_{LT} = \frac{48M_t}{\pi D^2} - \frac{W_t}{\pi D}$$
$$F_{LC} = (-)\frac{48M_t}{\pi D^2} - \frac{W_t}{\pi D}$$

Skirt thickness required

$$t_{sk} = \frac{F_{LT}}{0.707\,S_tE} \quad \text{or} \quad \frac{F_{LC}}{0.707S_cE}$$

whichever is greater.

Notes

1. Base plate thickness:
   - If $t \leq \frac{1}{2}$ in., use Type 1.
   - If $\frac{1}{2}$ in. $< t \leq \frac{3}{4}$ in., use Type 2.
   - If $t > \frac{3}{4}$ in., use Type 3 or 4.
2. To reduce sizes of anchor bolts:
   - Increase number of anchor bolts.
   - Use higher-strength bolts.
   - Increase width of base plate.
3. Number of anchor bolts should always be a multiple of 4. If more anchor bolts are required than spacing allows, the skirt may be angled to provide a larger bolt circle or bolts may be used inside and outside of the skirt. Arc spacing should be kept to a minimum if possible.
4. The base plate is not made thinner by the addition of a compression ring. t_t, would be the same as required for chair-type design. Use a compression ring to reduce induced stresses in the skirt or for ease of fabrication when chairs become too close.
5. Dimension "a" should be kept to a minimum to reduce induced stresses in the skirt. This will provide a more economical design for base plate, chairs, and anchor bolts.
6. The value of K represents the location of the neutral axis between the anchor bolts in tension and the concrete in compression. A preliminary value of K is estimated based on a ratio of the "allowable" stresses of the anchor bolts and concrete. From this preliminary value, anchor bolt sizes and numbers are determined and actual stresses computed. Using these actual stresses, the location of the neutral axis is found and thus an actual corresponding K value. A comparison of these K values tells the designer whether the location of the neutral axis he assumed for selection of anchor bolts was accurate. In successive trials, vary the anchor bolt sizes and quantity and width of base plate to obtain an optimum design. At each trial a new K is estimated and calculations repeated until the estimated K and actual K are approximately equal. This indicates both a balanced design and accurate calculations.
7. The maximum compressive stress between base plate and the concrete occurs at the outer periphery of the base plate.
8. For heavy-wall vessels, it is advantageous to have the center lines of the skirt and shell coincide if possible. For average applications, the O.D. of the vessel and O.D. of the skirt should be the same.
9. Skirt thickness should be a minimum of R/200.

PROCEDURE 3-15

DESIGN OF BASE DETAILS FOR VERTICAL VESSELS #2

Notation

E = joint efficiency
E_1 = modulus of elasticity at design temperature, psi
A_b = cross-sectional area of bolts, in.^{2}
d = diameter of bolt circle, in.
W_b = weight of vessel at base, lb
W_T = weight of vessel at tangent line, lb
w = width of base plate, in.
S = code allowable stress, tension, psi
N = number of anchor bolts
F'_c = allowable bearing pressure, concrete, psi
F_y = minimum specified yield stress, skirt, psi
F_s = allowable stress, anchor bolts, psi
f_{LT} = axial load, tension, lb/in.-circumference
f_{LC} = axial load, compression, lb/in.-circumference
F_T = allowable stress, tension, skirt, psi
F_c = allowable stress, compression, skirt, psi
F_b = allowable stress, bending, psi
f_s = tension force per bolt, lb
f_c = bearing pressure on foundation, psi
M_b = overturning moment at base, ft-lb
M_T = overturning moment at tangent line, ft-lb

Allowable Stresses

$$F_T = \text{lesser of} \begin{cases} \bullet\ 0.6F_y = \\ \bullet\ 1.33S = \end{cases}$$

$$F_c = \text{lesser of} \begin{cases} \bullet\ 0.333F_y = \\ \bullet\ 1.33 \text{ Factor B} = \\ \bullet\ \dfrac{t_{sk}E_1}{16\,R} = \\ \bullet\ 1.33\,S = \end{cases}$$

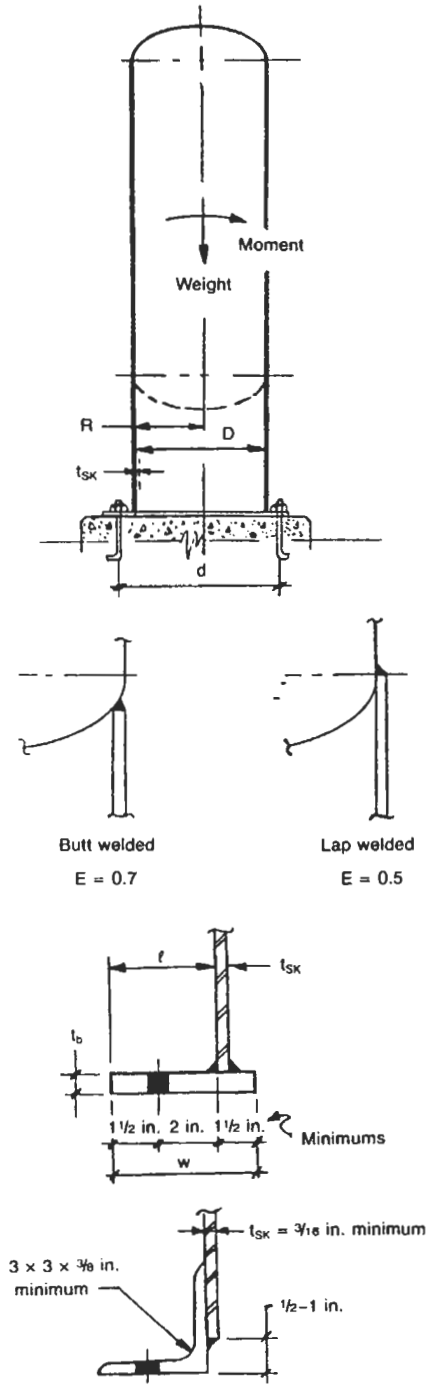

Figure 3-76. Typical dimensional data and forces for a vertical vessel supported on a skirt.

$F_b = 0.66F_y =$

F'_c =500 psi for 2000 lb concrete
750 psi for 3000 lb concrete

$$\text{Factor A} = \frac{0.125t_{sk}}{R} =$$

Factor B = from applicable material chart of ASME Code, Section II, Part D, Subpart 3

Anchor Bolts

- *Force per bolt due to uplift.*

$$f_s = \frac{48M_b}{dN} - \frac{W_b}{N}$$

- *Required bolt area, A_b.*

$$A_b = \frac{f_s}{F_s} =$$

Use ( ) _____ diameter bolts
Note: Use four ¾-in.-diameter bolts as a minimum.

Base Plate

- *Bearing pressure, f_c (average at bolt circle).*

$$f_c = \frac{48M_b}{\pi d^2 w} + \frac{W_b}{\pi dw} =$$

- *Required thickness of base plate, t_b.*

$$t_b = 1\sqrt{\frac{3f_c}{20{,}000}}$$

Skirt

- *Longitudinal forces, f_{LT} and f_{LC}.*

$$f_{LT} = \frac{48M_b}{\pi D^2} - \frac{W_b}{\pi D}$$

$$f_{LC} = (-)\frac{48M_b}{\pi D^2} - \frac{W_b}{\pi D}$$

Notes

1. This procedure is based on the "neutral axis" method and should be used for relatively small or simple vertical vessels supported on skirts.
2. If moment M_b is from seismic, assume W_b as the operating weight at the base. If M_b is due to wind, assume empty weight for computing the maximum value of f_{LT} and operating weight for f_{LC}.

- *Thickness required of skirt at base plate, t_{sk}.*

$$t_{sk} = \text{greater of } \frac{f_{LT}}{F_T} =$$

$$\text{or } \frac{f_{LC}}{F_C} =$$

- *Thickness required of skirt at skirt-head attachment.*

Longitudinal forces:

$$f_{LT}, f_{LC} = \pm\frac{48M_T}{\pi D^2} - \frac{W_T}{\pi D} =$$

$$f_{LT} =$$

$$f_{LC} =$$

Thickness required:

$$t_{sk} = \text{greater of } \frac{f_{LT}}{0.707\,F_T E} =$$

$$\text{or } \frac{f_{LC}}{0.707\,F_C E} =$$

REFERENCES

1. ASCE 7-95, "Minimum Design Loads for Buildings and Other Structures," American Society of Civil Engineers.
2. "Recommended Practice #11, Wind and Earthquake Design Standards," Chevron Corp., San Francisco, CA, March 1985.
3. *Uniform Building Code*, 1997 Edition, International Conference of Building Officials, Whittier, CA, 1997.
4. Bednar, H. H., *Pressure Vessel Design Handbook*, Van Nostrand Reinhold Co., 1981, Section 5.1.
5. Brownell, L. E., and Young, E. H., *Process Equipment Design*, John Wiley and Sons, Inc., 1959, Section 10.2c.
6. Fowler, D. W., "New Analysis Method for Pressure Vessel Column Supports," *Hydrocarbon Processing*, May 1969.
7. *Manual of Steel Construction*, 8th Edition, American Institute of Steel Construction, Inc., 1980, Tables C1.8.1 and 3-36.
8. Roark, R. J., *Formulas for Stress and Strain*, 4th Edition, McGraw Hill, 1971, Table VIII, Cases 1, 8, 9 and 18.
9. Wolosewick, F. E., "Support for Vertical Pressure Vessels," *Petroleum Refiner*, July 1981, pp. 137–140, August 1981, pp. 101–108.
10. Blodgett, O., *Design of Weldments*, The James F. Lincoln Arc Welding Foundation, 1963, Section 4.7.
11. "Local Stresses in Spherical and Cylindrical Shells Due to External Loadings," WRC Bulletin #107, 3rd revised printing, April 1972.
12. Bijlaard, P. P., "Stresses from Radial Loads and External Moments in Cylindrical Pressure Vessels," *Welding Journal Research Supplement*, December 1955, pp. 608–617.
13. Bijlaard, P. P., "Stresses from Radial Loads and External Moments in Cylindrical Pressure Vessels." *Welding Journal Research Supplement*, December 1954, pp. 615–623.
14. Megyesy, E. F., *Pressure Vessel Handbook*, 3rd Edition, Pressure Vessel Handbook Publishing Co., 1975, pp. 72–85.
15. Zick, L. P., "Stresses in Large Horizontal Cylindrical Pressure Vessels on Two Saddle Supports," *Welding Research Journal Supplement*, September 1951.
16. Moody, G. B., "How to Design Saddle Supports," *Hydrocarbon Processing*, November 1972.
17. Wolters, B. J., "Saddle Design—Horizontal Vessels over 13 Feet Diameter," Fluor Engineers, Inc., Irvine, CA, 1978.
18. Committee of Steel Plate Producers, *Steel Plate Engineering Data, Volume 2, Useful Information on the Design of Plate Structures*, American Iron and Steel Institute, Part VII.
19. Gartner, A. I., "Nomographs for the Solution of Anchor Bolt Problems," *Petroleum Refiner*, July 1951, pp. 101–106.
20. *Manual of Steel Construction*, 8th Edition, American Institute of Steel Construction, Inc., 1980, Part 3.
21. Blodgett, O., *Design of Welded Structures*, The James F. Lincoln Arc Welding Foundation, 7th printing, 1975, Section 3.3.

4
Special Designs

PROCEDURE 4-1

DESIGN OF LARGE-DIAMETER NOZZLE OPENINGS [1]

There are three methods for calculating the strength of reinforcement required for openings in pressure vessels:

1. Area replacement rules per UG-36(b).
2. Analysis per Appendix 1-7.
   a. 2/3 area replacement rule.
   b. Membrane-bending stress analysis.
3. FEA.

The Code defines when and where these methods apply. Reinforcement for large-diameter openings has been in the Code for a long time. The previous rule was simply to move the majority of the area replacement closer to the nozzle neck, also called the *2/3 rule*. Unfortunately, there were a few cases of flange leakage where the flange was located close to the shell. It was discovered that as the opening opened up, the flange was distorted. It was actually bending. In addition, the 2/3 rule did not allow for an accurate way to determine MAWP for the vessel without proof testing.

This issue was addressed in 1979 by McBride and Jacobs. Jacobs was from Fluor in Houston. The principle was to calculate stresses in two distinct areas, membrane and bending. Membrane stresses are based on pressure area times metal area. Bending is based on AISC beam formulas. The neck-and-shell section (and sometimes the flange as well) is assumed as bent on the hard axis. This is not a beam-on-elastic-foundation calculation. It is more of a brute-force approach.

This procedure was eventually adopted by the Code and incorporated. Unfortunately, it turned out that the procedure, while good for most cases, was not good for all. Yet it was still superior to what we used before this paper was published. The ASME has now revised the applicability of the procedure to the cases where it has been deemed safe.

Large openings calculated by this procedure are limited to openings less than 70% of the vessel diameter. There are four cases that can be solved for, depending on your nozzle geometry.

Reinforcement for Large-Diameter Openings

Per ASME, Section VIII, Appendix 1-7(b)1(b), the rules for "radial nozzles," not oblique or tangential, must meet strength requirements in addition to area replacement rules. The following lists the parameters for which these additional calculations shall be performed:

a. Exceed the limits of UG-36(b).
b. Vessel diameter > 60 in.
c. Nozzle diameter > 40 in.
d. Nozzle diameter > $3.4\sqrt{Rt}$.
e. The ratio $R_n/R < 0.7$ (that is, the nozzle does not exceed 70% of the vessel diameter).

Table 4-1 shows the ratio of vessel diameter, D, and shell thickness, t, where the values of $3.4\sqrt{Rt}$ are greater than 40. The heavy line indicates the limits for which 40 is exceeded. For nozzles that exceed these parameters, a finite element analysis (FEA) should be performed.

Table 4-1
Parameters for Large-Diameter Nozzles

D / t	60	72	84	96	108	120	132	144	156	168	180
1.00											
1.25											
1.5										38.16	39.5
1.75								38.2	39.7	41.2	42.6
2.00							39.1	40.8	42.5		
2.25						39.5	41.4				
2.50					39.5	41.6					
2.75				39.1	41.4						
3.00				40.8							
3.25			39.72	42.5							
3.50			41.22								
3.75		39.5									
4.00	37.2	40.8									
4.25	38.4										
4.50	39.5										
4.75	40.5										

Use $^2/_3$ rule area replacement when $3.4\sqrt{Rt} < 40$

Use membrane-bending analysis when $3.4\sqrt{Rt} > 40$

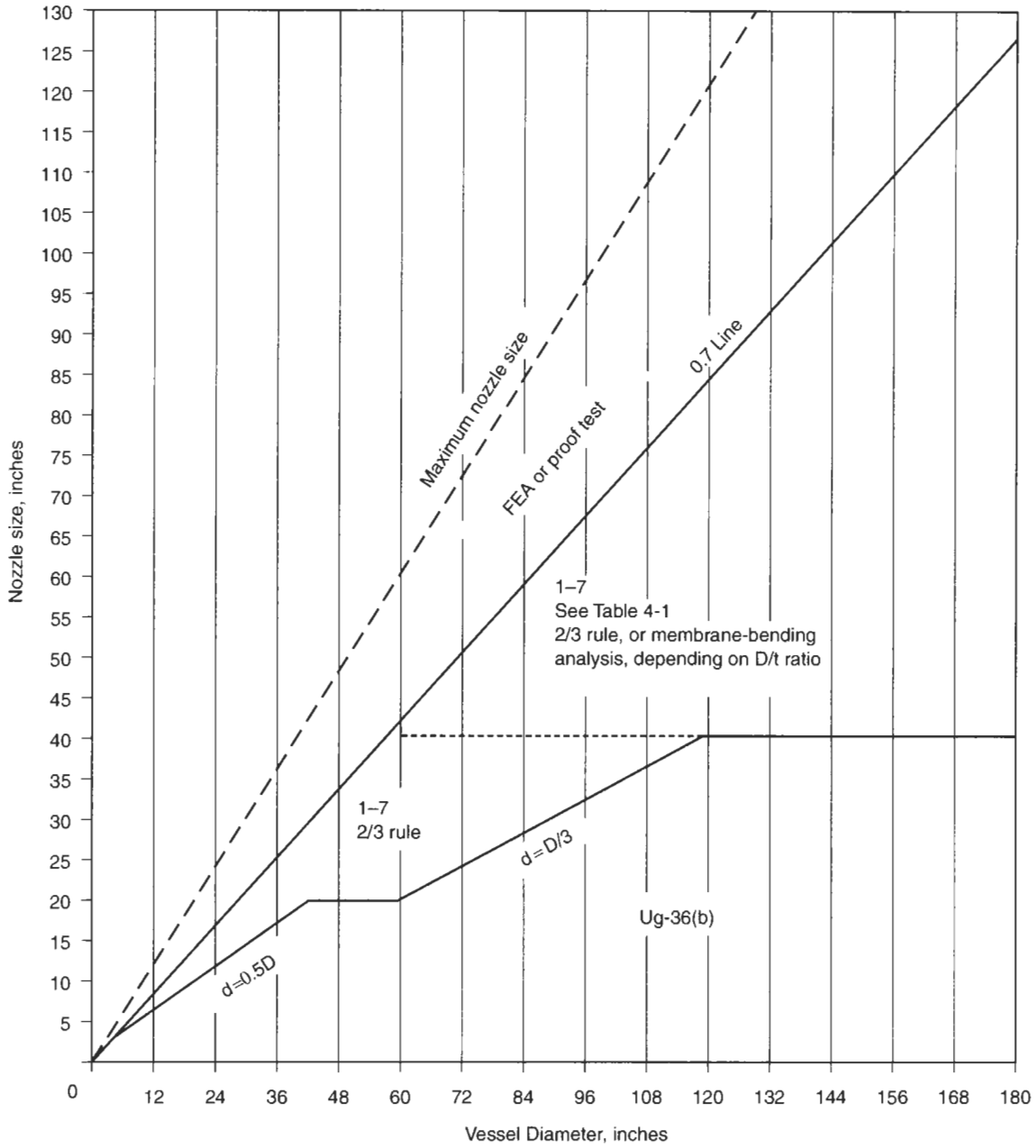

Figure 4-1. Guideline of nozzle reinforcement rules.

LARGE OPENINGS—MEMBRANE AND BENDING ANALYSIS

Notation

A_s = area of steel, in.^{2}
A_p = area of pressure, in.^{2}
P = internal pressure, psi (design or test)
r_m = mean radius of nozzle, in.
R_m = mean radius of shell, in.
T = thickness of shell, in.
t = thickness of nozzle, in.
F_y = minimum specified yield strength, ksi
σ = maximum combined stress, psi
σ_b = bending stress, psi
σ_m = membrane stress, psi
I = moment of inertia, in.^{4}
M = bending moment, in.-lb

Procedure

Step 1: Compute boundary limits for bending along shell and nozzle in accordance with Note 3. Limit will be governed by whether material of construction has a yield strength, F_y, less than or greater than 40 ksi.

Along shell =
Along nozzle =

Step 2: Utilizing the appropriate case (Figure 4-3) calculate the moment of inertia, I, and the distance from centroid to the inside of the shell, C.

I =
C =

Step 3: Compute membrane and bending stresses in accordance with the equations given later.

σ_m =
σ_b =

Step 4: Combine stresses and compare with allowable.

$\sigma_m + \sigma_b$ =

Calculations

- *Membrane stress, σ_m nozzles with reinforcing pads* (Cases 1 and 3).

$$\sigma_m = P\left[\frac{\left(R_i\left(r_i + t + \sqrt{R_m T}\right) + R_i\left(T + T_e + \sqrt{r_m t}\right)\right)}{A_S}\right]$$

- *Membrane stress, S_m nozzles without reinforcing pads* (Cases 2 and 4).

$$\sigma_m = P\left[\frac{\left(R_i\left(r_i + t + \sqrt{R_m T}\right) + R_i\left(T + \sqrt{r_m t}\right)\right)}{A_S}\right]$$

- *Bending stress, σ_b.*

$$M = P\left(\frac{r_i^3}{6} + R_i r_i C\right)$$

$$\sigma_b = \frac{MC}{I}$$

- *Allowable stesses.*

$\sigma_m < S$
$\sigma_m + \sigma_b < 1.5S$

Notes

1. Openings that exceed the limits of UG-36(b)(1) shall meet the requirements of the 2/3 rule.
2. This analysis combines the primary membrane stress due to pressure with the secondary bending stress resulting from the flexure of the nozzle about the hard axis.
3. Boundaries of metal along the shell and nozzle wall are as follows:

	Along Shell	Along Nozzle
Cases 1 and 2	$\sqrt{R_m T}$	$\sqrt{r_m t}$
Cases 3 and 4	16T	16t

4. This procedure applies to radial nozzles only.

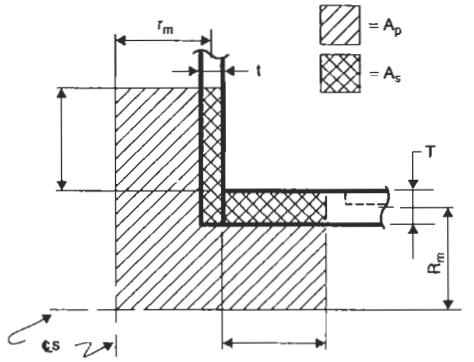

Figure 4-2. Areas of pressure and steel for nozzles.

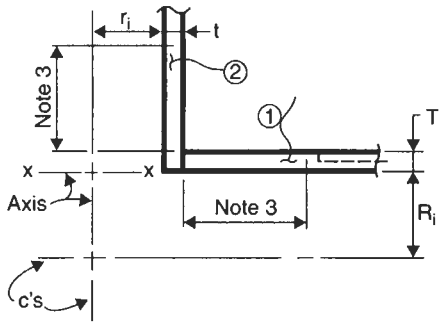

Moment of Inertia					
Part	A	Y	AY	AY^2	I
1					
2					
Σ					

$$C = \frac{\sum AY}{\sum A} \qquad I = \sum AY^2 + \sum I - C \sum AY$$

Case 1

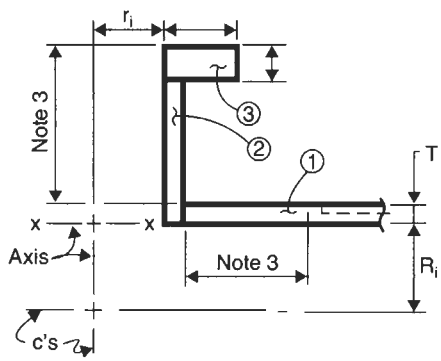

Moment of Inertia					
Part	A	Y	AY	AY^2	I
1					
2					
3					
Σ					

$$C = \frac{\sum AY}{\sum A} \qquad I = \sum AY^2 + \sum I - C \sum AY$$

Case 3

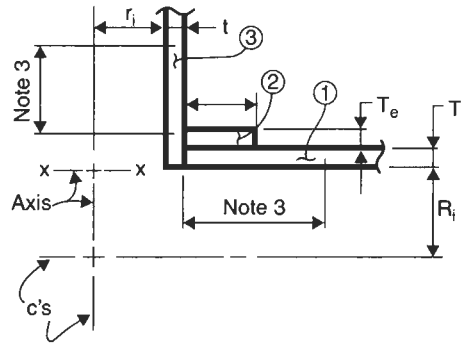

Part	A	Y	AY	AY^2	I
1					
2					
3					
Σ					

$$C = \frac{\sum AY}{\sum A} \qquad I = \sum AY^2 + \sum I - C \sum AY$$

Case 2

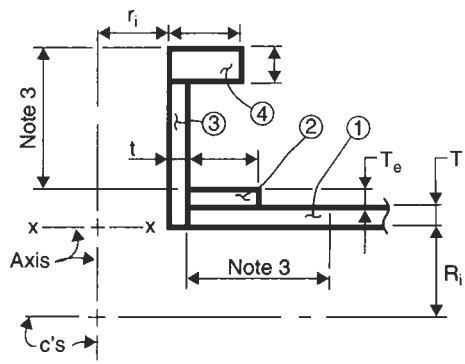

Part	A	Y	AY	AY^2	I
1					
2					
3					
4					
Σ					

$$C = \frac{\sum AY}{\sum A} \qquad I = \sum AY^2 + \sum I - C \sum AY$$

Case 4

Figure 4-3. Calculation form for moment of inertia I and centroid C for various nozzle configurations. Select the case that fits the geometry of the nozzle being considered.

PROCEDURE 4-2

DESIGN OF CONE–CYLINDER INTERSECTIONS [2]

Notation

P_e = equivalent internal pressure, psi

P = internal pressure, psi

P_x = external pressure, psi

$P_{1\text{-}2}$ = longitudinal force due to internal or external pressure, lb/in.-circumference

A = ASME external pressure factor

A_a = cross-sectional area of ring, in.^{2}

A_e = excess metal area available, in.^{2}

A_T = equivalent area of composite shell, cone, and ring, in.^{2}

A_s = required area of reinforcement at small end of cone, in.^{2}

A_L = required area of reinforcement at large end of cone, in.^{2}

A_r = minimum required cross-sectional area of ring, in.^{2}

B = allowable longitudinal compressive stress, psi

$M_{1\text{-}2}$ = longitudinal bending moment due to wind or seismic at Elevation 1 or 2, in.-lb

M = equivalent radius of large end, in.

N = equivalent radius of small end, in.

$V_{1\text{-}4}$ = longitudinal loads due to weight plus moment, lb/in.-circumference

$H_{P1\text{-}2}$ = radial thrust due to internal or external pressure, lb/in.-circumference

$H_{1\text{-}4}$ = radial thrust due to weight and moment, lb/in.-circumference

H_c = circumferential load due to internal or external pressure, lb/in.-circumference

$F_{L1\text{-}2}$ = total longitudinal load on cylinder at Elevation 1 or 2, lb/in.-circumference

F_{LC} = longitudinal load in cone, lb/in.-circumference

f_s = equivalent axial load at junction of small end, lb/in.

f_L = equivalent axial load at junction of large end, lb/in.

$E_{1\text{-}2}$ = joint efficiency of longitudinal welded joints in shell or cone

E_S,E_C,E_R = modulus of elasticity of shell, cone and ring, respectively, at design temperature, psi

S_S,S_C,S_R = allowable stress, tension, of shell, cone and ring, respectively, at design temperature, psi

$W_{1\text{-}2}$ = dead weight at Elevation 1 or 2, lb

σ_L = longitudinal stress in shell, psi

σ_{LC} = longitudinal stress in cone, psi

σ_c = circumferential stress, psi

I = moment of inertia of ring, in.^{4}

I_r = moment of inertia required of ring, in.^{4}

t_e = excess metal thickness available for reinforcement, in.

t_{rs} = thickness required, shell, in.

t_{rc} = thickness required, cone, in.

Δ,m,K,X,Y = factors as defined herein

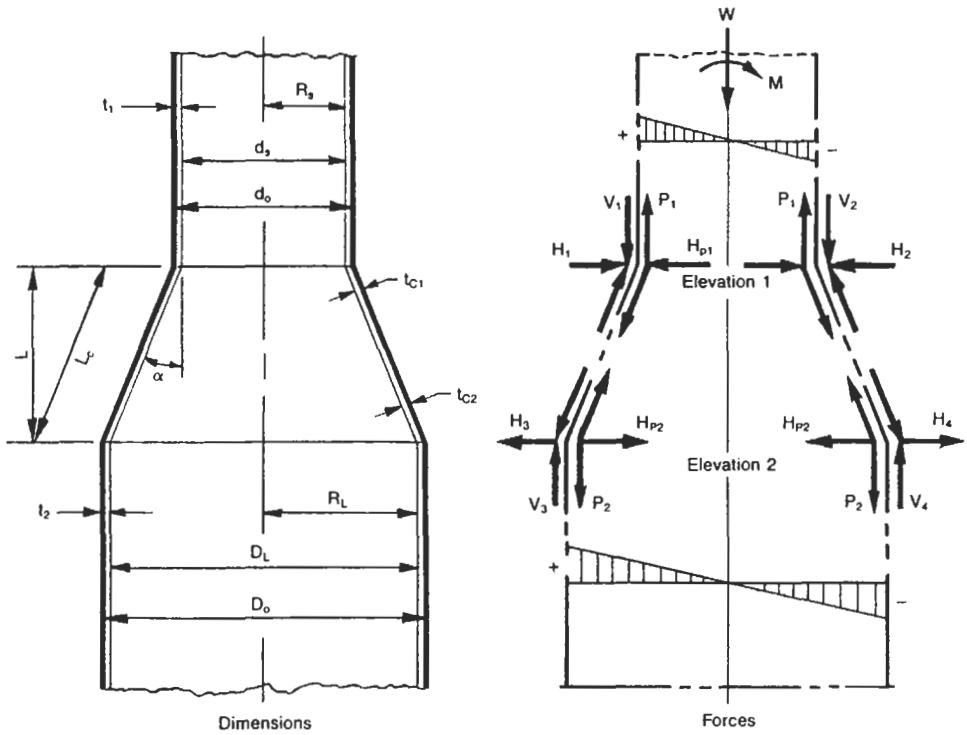

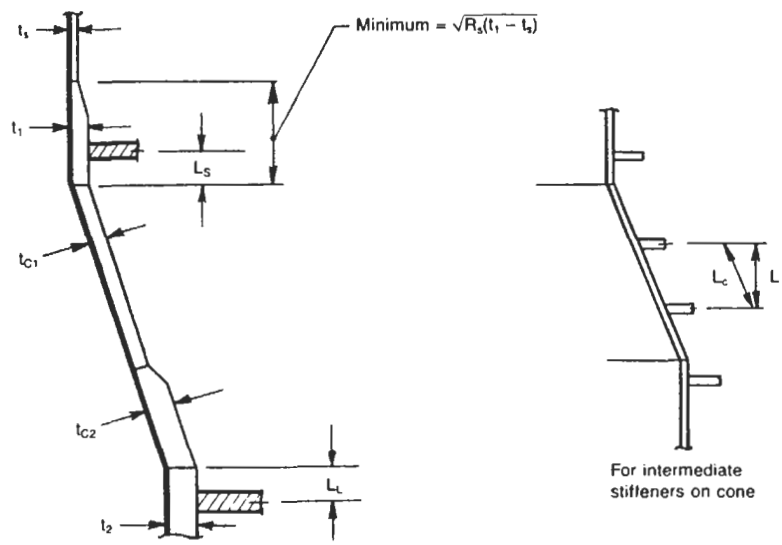

Figure 4-4. Dimension and forces of cone–cylinder intersections.

COMPUTING FORCES AND STRESSES

	SMALL END				LARGE END			
	Case 1: Tension		Case 2: Compression		Case 3: Tension		Case 4: Compression	
	See Note 1 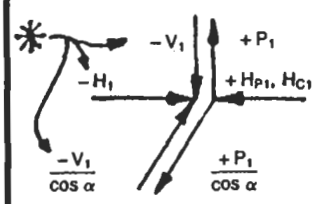		See Note 1 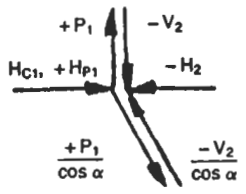		See Note 1 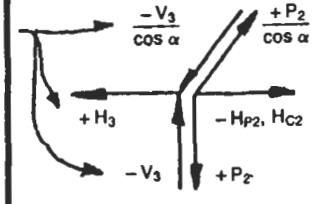		See Note 1 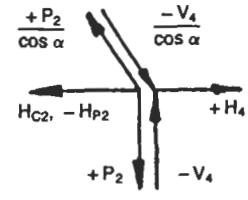	
		Int.	Ext.		Int.	Ext.		Int.	Ext.
Cylinder	$V_1 = \frac{-w_1}{\pi d_s} - \frac{4M_1}{\pi d_s^2}$	–	–	$V_2 = \frac{-w_1}{\pi d_s} + \frac{4M_1}{\pi d_s^2}$	–	–	$V_3 = \frac{-w_2}{\pi D_L} - \frac{4M_2}{\pi D_L^2}$	–	–	$V_4 = \frac{-w_2}{\pi D_L} + \frac{4M_2}{\pi D_L^2}$	–	–
	See Note 1						See Note 1					
	$P_1 = \frac{PR_s}{2}, \frac{P_xR_s}{2}$	+	–	P_1 = same	+	–	$P_2 = \frac{PR_L}{2}, \frac{P_xR_L}{2}$	+	–	P_2 = same	+	–
Function	$F_L =$			$F_L =$			$F_L =$			$F_L =$		
	See Note 1						See Note 1					
	$H_1 = V_1 \tan\alpha$	–	–	$H_2 = V_2 \tan\alpha$	–	–	$H_3 = V_3 \tan\alpha$	–	–	$H_4 = V_4 \tan\alpha$	–	–
	$H_{P1} = P_1 \tan\alpha$	+	–	$H_{P1} = P_1 \tan\alpha$	+	–	$H_{P2} = -P_2 \tan\alpha$	–	+	$H_{P2} = -P_2 \tan\alpha$	–	+
	$H_{C1} = PR_s, P_xR_s$	+	–	H_{C1} = same	+	–	$H_{C2} = PR_L, P_xR_L$	+	–	H_{C2} = same	+	–
Cone	$F_C =$			$F_C =$			$F_C =$			$F_C =$		
	See Note 1						See Note 1					
	$\frac{V_1}{\cos\alpha} =$	–	–	$\frac{V_2}{\cos\alpha} =$	–	–	$\frac{V_3}{\cos\alpha} =$	–	–	$\frac{V_4}{\cos\alpha} =$	–	–
	$\frac{P_1}{\cos\alpha} =$	+	–	$\frac{P_1}{\cos\alpha} =$	+	–	$\frac{P_2}{\cos\alpha} =$	+	–	$\frac{P_2}{\cos\alpha} =$	+	–
	$F_{LC} =$			$F_{LC} =$			$F_{LC} =$			$F_{LC} =$		

STRESS	END	TENSION	COMPRESSION	MAX. ALLOW. STRESS COMP.
Maximum longitudinal stress cylinder, σ_L, psi	Small	$F_L/t_1 =$	$F_L/t_1 =$	[2, Para. UG-23(b)(2) longitudinal compression only.] Small end: $A = \frac{0.125t_1}{R_S}$ B =
	Large	$F_L/t_2 =$	$F_L/t_2 =$	
Maximum circumferential stress at junction, σ_c, psi	Small	$F_C/t_1 =$	$F_C/t_1 =$	
	Large	$F_C/t_2 =$	$F_C/t_2 =$	
Maximum longitudinal stress in cone, σ_{LC}, psi	Small	$F_{LC}/t_{C1} =$	$F_{LC}/t_{C1} =$	Large end: $A = \frac{0.125t_2}{R_L}$ B =
	Large	$F_{LC}/t_{C2} =$	$F_{LC}/t_{C2} =$	

Notes:

1. Signs for V_1, H_1, V_3, and H_3 must be reversed if uplift due to moment is greater than weight.
2. Int./Ext. signify cases for internal and/or external pressure.

Example

$P = 50$ psi
$P_x = 7.5$ psi

Material: SA516-55, $F_y = 30$ ksi

$S = 13.8$ ksi
$E = 0.85$

Design temperature: 650°F

$t_1 = 0.1875$ in.

$t_2 = 0.3125$ in.

$t_{c1} = t_{c2} = 0.3125$ in.

$R_s = 30.156$ in.

$R_L = 60.219$ in.

$d_s = 60.3125$ in.

$D_L = 120.438$ in.

$W_1 = 36{,}500$ lb

$W_2 = 41{,}100$ lb

$M_1 = 2{,}652{,}000$ in.-lb

$M_2 = 3{,}288{,}000$ in.-lb

$\alpha = 25.46°$

$$V_1 = \frac{-36{,}500}{\pi 60.3125} + \frac{4(2{,}652{,}000)}{\pi 60.3125^2} = +735$$

$$V_2 = \frac{-36{,}500}{\pi 60.3125} - \frac{4(2{,}652{,}000)}{\pi 60.3125^2} = -1121$$

$$V_3 = \frac{-41{,}100}{\pi 120.438} + \frac{4(3{,}288{,}000)}{\pi 120.438^2} = +180$$

$$V_4 = \frac{-41{,}100}{\pi 120.438} - \frac{4(3{,}288{,}000)}{\pi 120.438^2} = -396$$

$$P_1 = \frac{50(30.156)}{2} = +754$$

$$P_1 = \frac{-7.5(30.156)}{2} = -113$$

$$P_2 = \frac{50(60.219)}{2} = +1505$$

$$P_2 = \frac{-7.5(60.219)}{2} = -225$$

$$H_1 = V_1 \tan\alpha = +350$$

$$H_2 = V_2 \tan\alpha = -533$$

$$H_3 = V_3 \tan\alpha = +86$$

$$H_4 = V_4 \tan\alpha = -189$$

$$H_{P1} = P_1 \tan\alpha = +358/-54$$

$$H_{P2} = P_2 \tan\alpha = -717/+107$$

$$H_{c1} = PR_s = 50(30.156) = +1508$$
$$P_xR_s = -7.5(30.156) = -226$$

$$H_{c2} = PR_L = 50(60.219) = +3011$$
$$P_xR_L = -7.5(60.219) = -452$$

$$\frac{V_1}{\cos\alpha} = +814$$

$$\frac{V_2}{\cos\alpha} = -1241$$

$$\frac{V_3}{\cos\alpha} = +199$$

$$\frac{V_4}{\cos\alpha} = -438$$

$$\frac{P_1}{\cos\alpha} = \frac{+754}{\cos\alpha} = +835, \quad \frac{-113}{\cos\alpha} = -125$$

$$\frac{P_2}{\cos\alpha} = \frac{+1505}{\cos\alpha} = +1666, \quad \frac{-225}{\cos\alpha} = -249$$

COMPUTING FORCES AND STRESSES

SMALL END						LARGE END					
Case 1: Tension			**Case 2: Compression**			**Case 3: Tension**			**Case 4: Compression**		
See Note 1 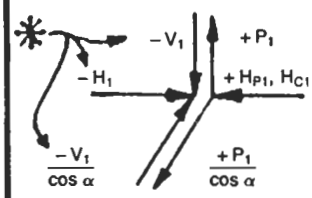			See Note 1 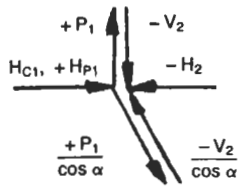			See Note 1 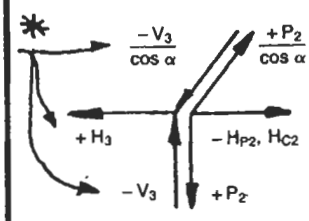			See Note 1 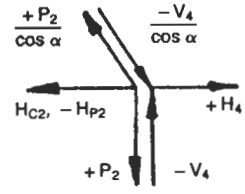		
	Int.	Ext.		Int.	Ext.		Int.	Ext.		Int.	Ext.
$V_1 = \frac{-w_1}{\pi d_s} - \frac{4M_1}{\pi d_s^2}$	+795	+735	$V_2 = \frac{-w_1}{\pi d_s} + \frac{4M_1}{\pi d_s^2}$	−1121	−1121	$V_3 = \frac{-w_2}{\pi D_L} - \frac{4M_2}{\pi D_L^2}$	+180	+180	$V_4 = \frac{-w_2}{\pi D_L} + \frac{4M_2}{\pi D_L^2}$	−396	−396
See Note 1						See Note 1					
$P_1 = \frac{PR_s}{2}, \frac{P_xR_s}{2}$	+754	−113	P_1 = same	+754	−113	$P_2 = \frac{PR_L}{2}, \frac{P_xR_L}{2}$	+1505	−225	P_2 = same	+1505	−225
F_L =	1489	622	F_L =	−367	−1234	F_L =	1685	−45	F_L =	1109	−621
See Note 1						See Note 1					
$H_1 = V_1 \tan \alpha$	+350	+350	$H_2 = V_2 \tan \alpha$	−533	−533	$H_3 = V_3 \tan \alpha$	+86	+86	$H_4 = V_4 \tan \alpha$	−189	−189
$H_{P1} = P_1 \tan \alpha$	+358	−54	$H_{P1} = P_1 \tan \alpha$	+368	−54	$H_{P2} = -P_2 \tan \alpha$	−717	+107	$H_{P2} = -P_2 \tan \alpha$	−717	+107
$H_{C1} = PR_s, P_xR_s$	+1508	−226	H_{C1} = same	+1508	−226	$H_{C2} = PR_L, P_xR_L$	+3011	−452	H_{C2} = same	+3011	−452
F_C =	2216	70	F_C =	1333	−813	F_C =	2380	−259	F_C =	2105	−534
See Note 1						See Note 1					
$\frac{V_1}{\cos \alpha}$ =	+814	+814	$\frac{V_2}{\cos \alpha}$ =	−1241	−1241	$\frac{V_3}{\cos \alpha}$ =	+199	+199	$\frac{V_4}{\cos \alpha}$ =	−438	−438
$\frac{P_1}{\cos \alpha}$ =	+835	−125	$\frac{P_1}{\cos \alpha}$ =	+835	−125	$\frac{P_2}{\cos \alpha}$ =	+1666	−249	$\frac{P_2}{\cos \alpha}$ =	+1666	−249
F_{LC} =	1649	689	F_{LC} =	−406	−1366	F_{LC} =	1865	−50	F_{LC} =	1228	−687

STRESS	END	TENSION	COMPRESSION	MAX. ALLOW. STRESS COMP.
Maximum longitudinal stress cylinder, σ_L, psi	Small	F_L/t_1 = 1489/.1875 = 7941	F_L/t_1 = −1234/.1875 = −6581	[2, Para. UG-23(b)(2) longitudinal compression only.] Small end: UCS 28.2
	Large	F_L/t_2 = 1685/.3125 = 5392	F_L/t_2 = −621/.3125 = −1987	
Maximum circumferential stress at junction, σ_c, psi	Small	F_C/t_1 = 2216/.1875 = 11818	F_C/t_1 = −813/.1875 = −4336	$A = \frac{0.125t_1}{R_S}$ = .00078 B = 7800 PSI
	Large	F_C/t_2 = 2380/.3125 = 7616	F_C/t_2 = −534/.3125 = −1709	
Maximum longitudinal stress in cone, σ_{LC}, psi	Small	F_{LC}/t_{C1} = 1649/.3125 = 5277	F_{LC}/t_{C1} = −1366/.3125 = −4371	Large end: $A = \frac{0.125t_2}{R_L}$ = .000665 B = 7500 PSI
	Large	F_{LC}/t_{C2} = 1865/.3125 = 5968	F_{LC}/t_{C2} = −687/.3125 = −2198	

Notes:

1. Signs for V_1, H_1, V_3, and H_3 must be reversed if uplift due to moment is greater than weight.
2. Int./Ext. signify cases for internal and/or external pressure.

Reinforcement Required at Large End Due to Internal Pressure

Table 4-2
Δ Degrees

P_e/X	Δ
0.001	11
0.002	15
0.003	18
0.004	21
0.005	23
0.006	25
0.007	27
0.008	28.5
0.009	30

From ASME Code, Section VIII, Div. 1. Reprinted by permission.

- *Equivalent pressure, P_e.*

$$P_e = P + \frac{4V}{D_L}$$

where V is the worst case, tension, at large end.

- *Determine if reinforcement is required.*

X = smaller of $S_s E_1$ or $S_c E_2$

Y = greater of $S_s E_s$ or $S_c E_c$

$$\frac{P_e}{X} =$$

Δ = (from Table 4-2)

Note: Δ = 30° if $P_e/X > 0.009$

If $\Delta < \alpha$, then reinforcement is required.

If $\Delta \geq \alpha$, then no reinforcement is required.

- *Determine area of reinforcement required, A_L.*

$$K = \frac{Y}{S_R E_R} \geq 1$$

$$t_{rs} = \frac{PR_L}{S_s E_1 - 0.6P}$$

$$t_{rc} = \frac{PD_L}{2\cos\alpha(S_c E_2 - 0.6P)}$$

$$A_L = \frac{P_e R_L^2 K}{2X}\left(1 - \frac{\Delta}{\alpha}\right)\tan\alpha$$

- *Determine area of ring required, A_r.*

t_e = smaller of $(t_2 - t_{rs})$ or

$$\left(t_{c2} - \frac{t_{rs}}{\cos\alpha}\right)$$

$$A_e = 4t_e\sqrt{R_L t_2}$$

$$A_r = A_L - A_e$$

If A_r is negative, the design is adequate as is. If A_r is positive, add a ring.

- *If a ring is required.*

Maximum distance to edge of ring:

$$\sqrt{R_L t_2}$$

Maximum distance to centroid of ring, L_L:

$$L_L = 0.25\sqrt{R_L t_2}$$

Reinforcement Required at Small End Due to Internal Pressure

- *Equivalent pressure, P_e.*

$$P_e = P + \frac{4V}{d_s}$$

where V is the worst case, tension, at small end.

Table 4-3
Δ Degrees

P_e/X	Δ
0.002	4
0.005	6
0.010	9
0.02	12.5
0.04	17.5
0.08	24
0.1	27
0.125	30

From ASME Code, Section VIII, Div. 1. Reprinted by permission.

- *Determine if reinforcement is required.*

  X = smaller of S_sE_1 or S_cE_2
  Y = greater of S_sE_s or S_cE_c

  $$\frac{P_e}{X} =$$

  Δ = (from Table 4-3)

  Note: $\Delta = 30°$ if $P_e/X > 0.125$

  If $\Delta < \alpha$, then reinforcement is required.
  If $\Delta \geq \alpha$, then no reinforcement is required.

- *Determine area of reinforcement required, A_s.*

  $$K = \frac{Y}{S_RE_R} = \geq 1$$

  $$A_s = \frac{P_eR_s^2K}{2X}\left(1 - \frac{\Delta}{\alpha}\right)\tan\alpha$$

  $$t_{rs} = \frac{PR_s}{S_sE_1 - 0.6P}$$

  $$t_{rc} = \frac{Pd_s}{2\cos\alpha(S_cE_2 - 0.6P)}$$

- *Determine area of ring required, A_r.*

  $$m = \text{smaller of } \frac{t_1}{t_2}\cos(\alpha - \Delta)$$

  or

  $$\frac{t_{C1}\cos\alpha\cos(\alpha - \Delta)}{t_{rs}}$$

  $$A_e = m\sqrt{R_st_{rs}}\left[\left(t_{C1} - \frac{t_{rc}}{\cos\alpha}\right) + (t_1 - t_{rs})\right]$$

  $$A_r = A_s - A_e$$

  If A_r is negative, the design is adequate as is. If A_r is positive, add a ring.

- *If a ring is required.*

  Maximum distance to edge of ring

  $$= \sqrt{R_st_1}$$

  Maximum distance to centroid of ring

  $$L_s = 0.25\sqrt{R_st_1}$$

Reinforcement Required at Large End Due to External Pressure

- *Determine if reinforcement is required.*

  $$\frac{P_x}{S_sE_1}$$

  Δ = (from Table 4-4)
  Note: $\Delta = 60°$ if $P_x/S_sE_1 > 0.35$
  $E_1 = 1.0$ for butt welds in compression

  If $\Delta < \alpha$, then reinforcement is required.
  If $\Delta \geq \alpha$, then no reinforcement is required.

- *Determine area of reinforcement required, A_L.*

  $$K = \frac{S_sE_s}{S_RE_R}$$

  $$A_L = \frac{KF_LR_L\tan\alpha}{S_sE_1}\left[1 - 0.25\left(\frac{P_xR_L - F_L}{F_L}\right)\frac{\Delta}{\alpha}\right]$$

  where F_L is the largest compressive force at large end.

Table 4-4
Δ Degrees

P_x/S_sE_1	Δ
0	0
0.002	5
0.005	7
0.010	10
0.02	15
0.04	21
0.08	29
0.1	33
0.125	37
0.15	40
0.2	47
0.25	52
0.3	57
0.35	60

From ASME Code, Section VIII, Div. 1. Reprinted by permission.

- *Determine area of ring required, A_r.*

  t_{rs} = required thickness of shell for external pressure

  t_e = smaller of $(t_2 - t_{rs})$

  or

$$\left(t_{C2} - \frac{t_{rs}}{\cos \alpha}\right)$$

$$A_e = 4t_e\sqrt{R_L t_2}$$

$$A_r = A_L - A_e$$

If A_r is negative, the design is adequate as is. If A_r is positive, a ring must be added.

- *If a ring is required*

  Assume a ring size and calculate the following:

  A_a =

$$L_L = 0.5\sqrt{R_L t_2}$$

$$L_e = \sqrt{L^2 + (R_L - R_s)^2}$$

$$A_T = \frac{L_L t_2}{2} + \frac{L_e t_{c2}}{2} + A_a$$

$$M = \frac{-R_L \tan \alpha}{2} + \frac{L_L}{2} + \frac{R_L^2 - R_s^2}{3R_L \tan \alpha}$$

$$f_L = P_x M + V_4 \tan \alpha$$

$$B = \frac{f_L D_o}{A_T}$$

  A = using calculated value of B determine A from applicable material chart of ASME Code, Section II. For values of A falling to the left of the material/temperature line:

$$A = \frac{2B}{E_s}$$

Required moment of inertia, I_r:

Ring only	*Ring-shell*
$I_r = \frac{AD_o^2 A_T}{14}$	$I'_r = \frac{AD_o^2 A_T}{10.9}$

Reinforcement Required at Small End Due to External Pressure

- *Determine area of reinforcement required, A_s.*

$$K = \frac{S_s E_s}{S_R E_R}$$

$$A_s = \frac{KF_L R_s \tan \alpha}{S_s E_1}$$

where F_L is the largest compressive load at small end and $E_1 = 1.0$ for butt welds in compression.

- *Determine area of ring required, A_r.*

$$m = \text{smaller of } \left[\frac{t_1}{t_{rs}} \cos(\alpha - \Delta)\right]$$

or

$$\left[\frac{t_{C1} \cos \alpha \cos(\alpha - \Delta)}{t_{rs}}\right]$$

$$A_e = m\sqrt{R_s t_{rs}}\left[\left(t_{C1} - \frac{t_{rs}}{\cos \alpha}\right) + (t_1 - t_{rs})\right]$$

where t_{rs} is the thickness required of the small cylinder due to external pressure and Δ is from Table 4-4 as computed for the large end.

$$A_r = A_s - A_e$$

If A_r is negative, the design is adequate as is. If A_r is positive, a ring must be added.

- *If a ring is required.*

  Assume a ring size and calculate the following:

  A_a =

$$L_s = 0.5\sqrt{R_s t_1}$$

$$L_c = \sqrt{L^2 + (R_L - R_s)^2}$$

$$A_T = \frac{L_s t_1}{2} + \frac{L_C t_{C1}}{2} + A_a$$

$$N = \frac{R_s \tan \alpha}{2} + \frac{L_s}{2} + \frac{R_L^2 - R_s^2}{3R_L \tan \alpha}$$

$$f_s = P_x N + V_2 \tan \alpha$$

$$B = \frac{f_s d_o}{A_T}$$

A = using calculated value of B, determine A from the applicable material chart of ASME Code, Section II. For values of A falling to the left of the material/temperature line:

$$A = \frac{2B}{E_s}$$

- *Required moment of inertia, I_r.*

Ring only	*Ring-shell*
$I_r = \frac{AD_o^2 A_T}{14}$	$I_r' = \frac{AD_o^2 A_T}{10.9}$

Notes

1. Cone–cylinder intersections are areas of high discontinuity stresses. For this reason the ASME Code requires reinforcement at each junction and limits angle α to 30° unless a special discontinuity analysis is performed. This procedure enables the designer to take into account combinations of loads, pressures, temperatures, and materials for cones where α is less than or equal to 30° without performing a discontinuity analysis and fulfill all code requirements.
2. The design may be checked unpressurized with the effects of weight, wind, or earthquake by entering P_x as 0 in the design tables. This condition may govern for the compression side.

PROCEDURE 4-3

STRESSES AT CIRCUMFERENTIAL RING STIFFENERS [3–6]

Notation

P = pressure; (+) internal pressure, (−) external pressure, psi
ν_s = Poisson's ratio, shell, 0.3 for steel
α_r = coefficient of thermal expansion of ring, in./in./°F
α_s = coefficient of thermal expansion of shell, in./in./°F
E_r = modulus of elasticity, ring, psi
E_s = modulus of elasticity, shell, psi
ΔT_r = temperature difference between 70°F and design temperature, ring, °F
ΔT_s = temperature difference between 70°F and design temperature, shell, °F
M = bending moment in shell, in.-lb
M_b = longitudinal bending moment, in.-lb
F = discontinuity force, lb/in.
N = axial force, lb/in.
W_o = operating weight of vessel above ring elevation, lb/in.
$W_{1\text{-}7}$ = radial deflections, in.
A_r = cross-sectional area of ring, in.^{2}
σ_x = longitudinal stress, shell, psi
σ_ϕ = circumferential stress, shell, psi
$\sigma_{\phi r}$ = circumferential stress, ring, psi
β = damping factor

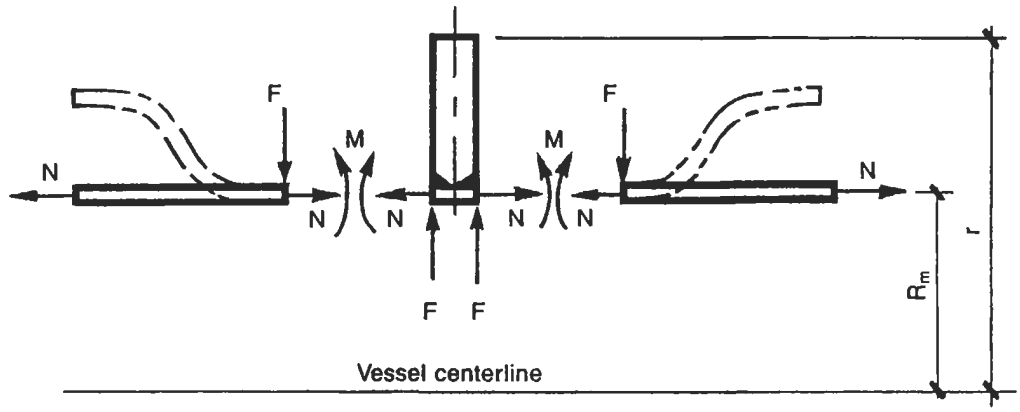

Figure 4-5. Dimension and forces for a stiffening ring on the outside of a vessel.

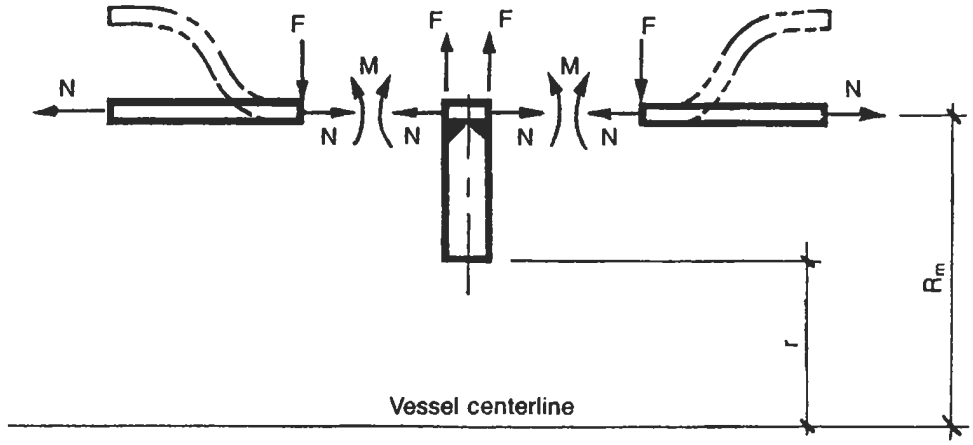

Figure 4-6. Dimension and forces for a stiffening ring on the inside of a vessel.

Table 4-5
Radial Displacements

	Cause	Displacement	Notes
Shell	Discontinuity force, F	$W_1 = \frac{FR_m^2\beta}{2E_s t}$	Solve for W_1 in terms of F, which is unknown at this time.
	Thermal expansion	$W_2 = R_m\alpha_s\,\Delta T_s$	
	Pressure, P	$W_3 = \frac{PR_m^2}{tE_s}(1 - 0.5\nu_s)$	
	Axial load, N	$W_4 = (-)\frac{N\nu_s}{2\pi tE_s}$	
Ring	Discontinuity force, F	$W_5 = (-)\frac{FR_m^2}{A_r E_r}$	Solve for W_5 in terms of F, which is unknown at this time.
	Pressure, P	$W_6 = \frac{PR_m}{E_r}\left[\frac{2r^2}{R_m^2 - r^2}\right]$	
	Thermal expansion	$W_7 = R_m\alpha_r\,\Delta T_r$	

Required Data

$R_m =$ _____ $E_r =$ _____
$r =$ _____ $\Delta T_s =$ _____
$A_r =$ _____ $\Delta T_r =$ _____
$t =$ _____ $P =$ _____
$\alpha_s =$ _____ $\nu_s =$ _____
$\alpha_s =$ _____ $M_b =$ _____
$E_s =$ _____ $W_o =$ _____

Formulas

- *Coefficient, β.*

$$\beta = \sqrt[4]{\frac{3(1-\nu_s^2)}{R_m^2 t^2}}$$

For steel, where $\nu_s = 0.3$,

$$\beta = \frac{1.285}{\sqrt{R_m t}}$$

- *Axial load, N.*

$$N = (\pm)\frac{2M_b}{R_m} - W_o + P\pi R_m^2$$

(+) tension, (−) compression

Forces and Moments

- *Equate displacements and solve for force, F.*

$$W_1 + W_2 + W_3 + W_4 = W_5 + W_6 + W_7$$

where $W_1 = (+)$
$W_5 = (-)$
$F =$

- *Internal moment, M.*

$$M = \frac{(W_2 - W_7) + (W_3 - W_6) + W_4}{4\beta\left[\frac{R_m^2}{A_r E_r} + \frac{R_m^2 \beta}{2E_s t}\right]}$$

Stresses

- *Shell.*

$$\sigma_x = (\pm)\frac{6M}{t^2} - \frac{N}{2\pi R_m t} + \frac{PR_m}{2t}$$

$$\sigma_\phi = (\pm)\frac{6M\nu_s}{t^2} - \frac{FR_m}{2t} + \frac{PR_m}{t}$$

- *Ring.*

$$\sigma_{\phi r} = \frac{FR_m}{A_r}$$

Table 4-6
Values of E (10^6 psi) and α (10^{-6} in./in./°F)

Material		Temp. °F											
		100°	200°	300°	400°	500°	600°	700°	800°	900°	1000°	1100°	1200°
Carbon steel	E	29	28.7	28.2	27.6	26.8	25.9	24.5	23	21	18.1		
	α	6.2	6.4	6.6	6.8	7.0	7.2	7.4	7.7	7.9	8.0		
Austenitic stainless steel	E	28	27.3	26.6	25.9	25.2	24.5	23.8	23	22.4	21.6		
	α	9.2	9.3	9.5	9.6	9.7	9.8	10.0	10.1	10.2	10.3		
Low chromium (<3%)	E	29.9	29.5	29	28.6	28	27.4	26.6	25.7	24.5	23	20.4	15.6
	α	6.2	6.4	6.6	6.8	7.0	7.2	7.4	7.7	7.9	8.0	8.1	8.2
Chrome-moly (5%–9% chrome)	E	27.4	27.1	26.8	26.4	26	25.4	24.9	24.2	23.5	22.8	21.9	20.8
	α	5.9	6.0	6.2	6.3	6.5	6.7	6.8	7.0	7.1	7.2	7.3	7.4
High chrome (11%–27%)	E	29.2	28.7	28.3	27.7	27	26	24.8	23.1	21.1	18.6	15.6	12.2
	α	5.4	5.5	5.7	5.8	6	6.1	6.3	6.4	6.5	6.6	6.7	6.8
Inconel 600	E	31.7	30.9	30.5	30	29.6	29.2	28.6	27.9		25		20
	α	7.2	7.4	7.6	7.7	7.8	7.9	8.0	8.1				
Incoloy 800	E	28.5	27.8	27.3	26.8	26.2	25.7	25.2	24.6				
	α		7.9	7.9	8.8	8.9	9	9.1	9.2				

Notes

A stiffening ring causes longitudinal bending stresses in the shell immediately adjacent to the ring due to differential radial deflection between the vessel and ring. The stress is highest at the inner surface of the shell where longitudinal tension stresses due to pressure are combined with local bending stresses. This stress may be as high as 2.04 times the hoop stress in a simple, unstiffened shell of like size. The stress is local and fades rapidly with increasing distance from the ring. This procedure assumes stiffening rings are spaced greater than π/β so effect from adjacent rings is insignificant.

PROCEDURE 4-4

TOWER DEFLECTION [7]

Notation

L = overall length of vessel, in.
L_n = length of section, in.
E_n = modulus of elasticity of section, psi
I_n = moment of inertia of section, in.^{4}
W_n = concentrated loads, lb
w = uniformly distributed load, lb/in.
w_{max} = uniformly distributed load at top of vessel, lb/in.
w_{min} = uniformly distributed load at bottom of vessel, lb/in.
X = ratio L_n/L for concentrated loads
δ = deflection, in.

Cases

Case 1: Uniform Vessel, Uniform Load

$$\delta = \frac{wL^4}{8EI}$$

Case 2: Nonuniform Vessel, Uniform Load

- *If E is constant*

$$\delta = \frac{w}{8E}\left[\left(\frac{L_1^4}{I_1} + \frac{L_2^4}{I_2} + \cdots + \frac{L_n^4}{I_n}\right) - \left(\frac{L_2^4}{I_1} + \frac{L_3^4}{I_2} + \cdots + \frac{L_n^4}{I_{n-1}}\right)\right]$$

- *If E is not constant*

$$\delta = \frac{w}{8}\left[\left(\frac{L_1^4}{I_1E_1} + \frac{L_2^4}{I_2E_2} + \cdots + \frac{L_n^4}{I_nE_n}\right) - \left(\frac{L_2^4}{I_1E_1} + \frac{L_3^4}{I_2E_2} + \cdots + \frac{L_n^4}{I_{n-1}E_{n-1}}\right)\right]$$

Section n	L_n	L_n^4	I_n	$\frac{L_n^4}{I_n}$	$\frac{L_n^4}{I_{n-1}}$
			$\Sigma=$		

$$\delta = \frac{w}{8E}\left[\sum\frac{L_n^4}{I_n} - \sum\frac{L_n^4}{I_{n-1}}\right]$$

Case 3: Nonuniform Vessel, Nonuniform Load

$$\delta = \left[\sum\frac{L_n^4}{I_n} - \sum\frac{L_n^4}{I_{n-1}}\right]\left[\frac{w_{min}}{8E} + \frac{5.5(w_{max} - w_{min})}{60E}\right]$$

Section n	L_n	L_n^4	I_n	$\frac{L_n^4}{I_n}$	$\frac{L_n^4}{I_{n-1}}$
			$\Sigma=$		

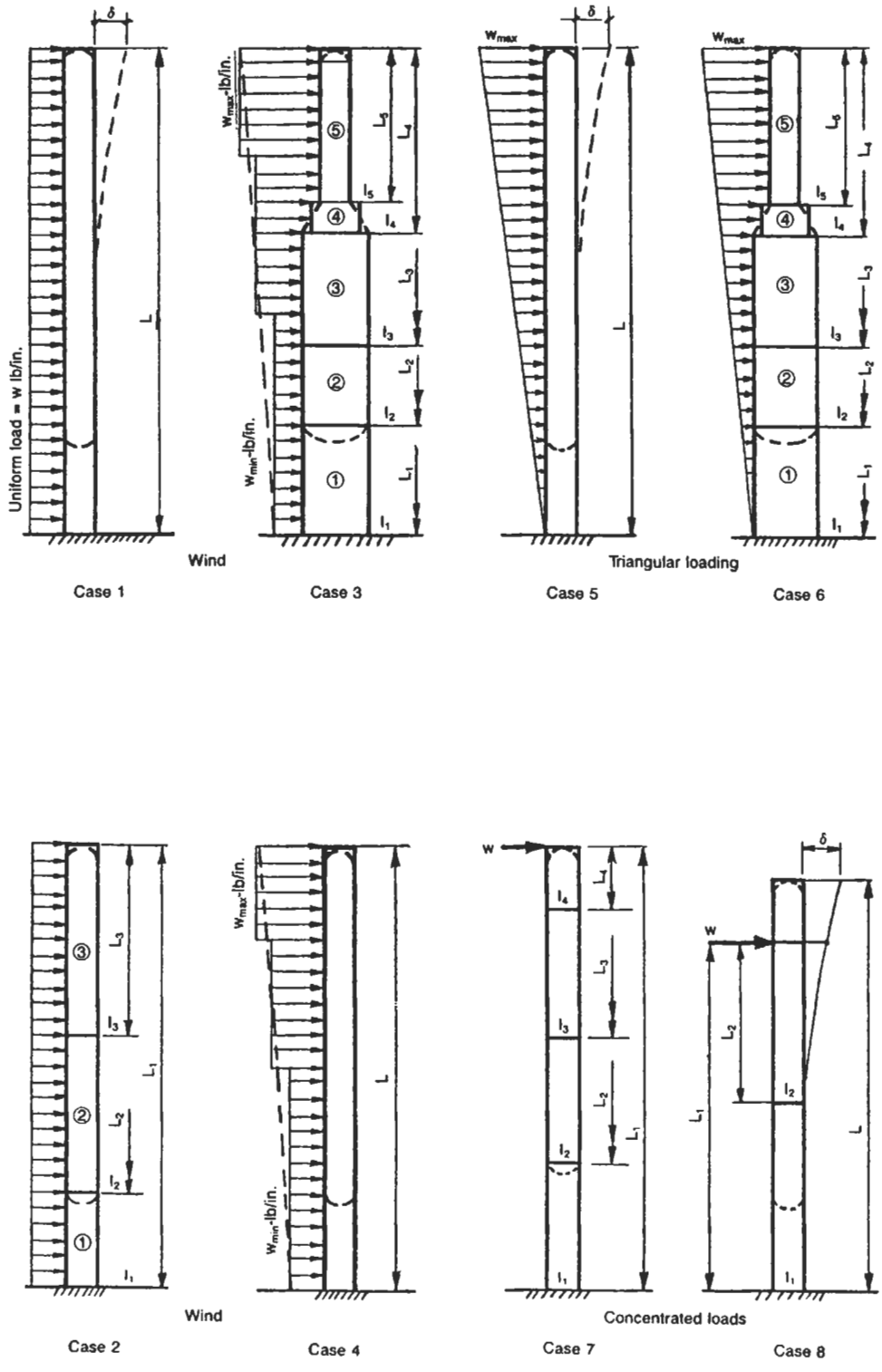

Figure 4-7. Dimension and various loadings for vertical, skirt-supported vessels.

Case 4: Uniform Vessel, Nonuniform Load

$$\delta = \frac{L^4}{I}\left[\frac{w_{min}}{8E} + \frac{5.5(w_{max} - w_{min})}{60E}\right]$$

Case 5: Uniform Vessel, Triangular Load

Load at base = 0
Load at top = w, lb/in.

$$\delta = \frac{5.5wL^4}{60EI}$$

Case 6: Nonuniform Vessel, Triangular Load

$$\delta = \frac{5.5w}{60E}\left[\sum \frac{L_n^4}{I_n} - \sum \frac{L_n^4}{I_{n-1}}\right]$$

Section n	L_n	L_n^4	I_n	$\frac{L_n^4}{I_n}$	$\frac{L_n^4}{I_{n-1}}$
			Σ=		

Case 7: Concentrated Load at Top of Vessel

- *Uniform vessel*

$$\delta = \frac{WL^3}{3EI}$$

Section n	L_n	L_n^3	I_n	$\frac{L_n^3}{I_n}$	$\frac{L_n^3}{I_{n-1}}$
			Σ=		

- *Nonuniform vessel*

$$\delta = \frac{W}{3E}\left[\sum \frac{L_n^3}{I_n} - \sum \frac{L_n^3}{I_{n-1}}\right]$$

Case 8: Concentrated Lateral Load at Any Elevation

$$X = \frac{L_1}{L}$$

- *For uniform vessel.*

$$\delta = \frac{WL_1^3}{3EI}\left(\frac{3 - X}{2X}\right)$$

- *For nonuniform vessels.*

$$\delta = \left[\frac{W}{3E}\left(\sum \frac{L_n^3}{I_n} - \sum \frac{L_n^3}{I_{n-1}}\right)\right]\left[\frac{3 - X}{2X}\right]$$

Section n	L_n	L_n^3	I_n	$\frac{L_n^3}{I_n}$	$\frac{L_n^3}{I_{n-1}}$
			Σ=		

Notes

1. This procedure calculates the static deflection of tall towers due to various loadings and accounts for the following:
   a. Different wind pressures at different elevations.
   b. Various thicknesses, diameters, and moments of inertia at different elevations.
   c. Different moduli of elasticity at different elevations due to a change in material or temperatures.
2. This procedure is not valid for vessels that are subject to wind-induced oscillations or that must be designed dynamically. See Procedure 4-8, "Vibration of Tall Towers and Stacks" and Note 5 of Procedure 3-1 for additional information regarding vessels in this category.
3. Deflection should be limited to 6 in. per 100 ft.
4. Deflections due to combinations of various loadings should be added to find the overall deflection.

PROCEDURE 4-5

DESIGN OF RING GIRDERS [8–12]

The circular girder supports the weight of the tank, vessel, or bin; its contents; and any installed plant equipment. The ring beam will take the load from the vessel uniformly distributed over its full circumference, and in turn will be supported on a structural steel framework in at least four places.

The shell of a column-supported tank, vessel, or bin can be considered as a ring beam whether or not there is a special built-up beam structure for that purpose.

Horizontal seismic force is transferred from the shell or short support skirt to the ring beam by tangential shear. The girder performs the function of transmitting the horizontal shear from the tank shell to the rods and posts of the supporting structure.

The girder is analyzed as a closed horizontal ring acted upon by the horizontal shear stresses in the tank shell and by the horizontal components of the stresses in the rods and posts in the top panel of the supporting steel framework.

Maximum girder stresses generally occur when the direction of the earthquake force is parallel to a diameter passing through a pair of opposite posts.

The ring beam (girder) is subjected to compression, bending, and torsion due to the weight of the tank, contents, and horizontal wind or seismic forces. The maximum bending moment will occur at the supports. The torsional moment will be zero at the supports and maximum at an angular distance β away from support points.

This procedure assumes that the rods are tension-only members and connect every adjacent post. It is not valid for designs where the rods skip a post or two!

For cases where the ring beam has additional moment, tangential and/or radial loads (such as sloping columns) these additional horizontal loads may be calculated using ring redundants. See Procedure 5-1.

Notation

D = diameter of column circle, in.
F = horizontal wind or earthquake force at plane of girder, lb
$F_{1,2}$ = resisting force in tie rod, panel force, lb
f_b = bending stress, psi
R = radius of column circle, in.
R_t = torsional resistance factor
Q = equivalent vertical force at each support due to dead weight and overturning moment, lb
q = uniform vertical load on ring beam, lb/in.
q_t = tangential shear, lb/in.
W = operating weight, lb

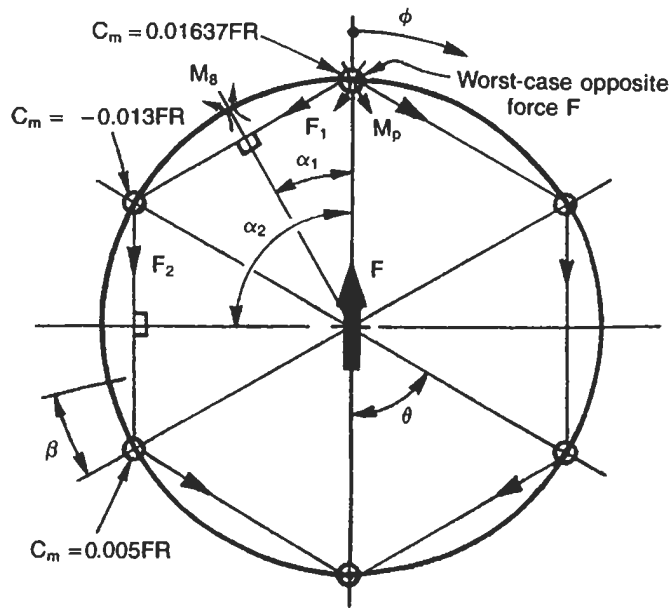

Typical six-column support structure shown (C_m are coefficients)

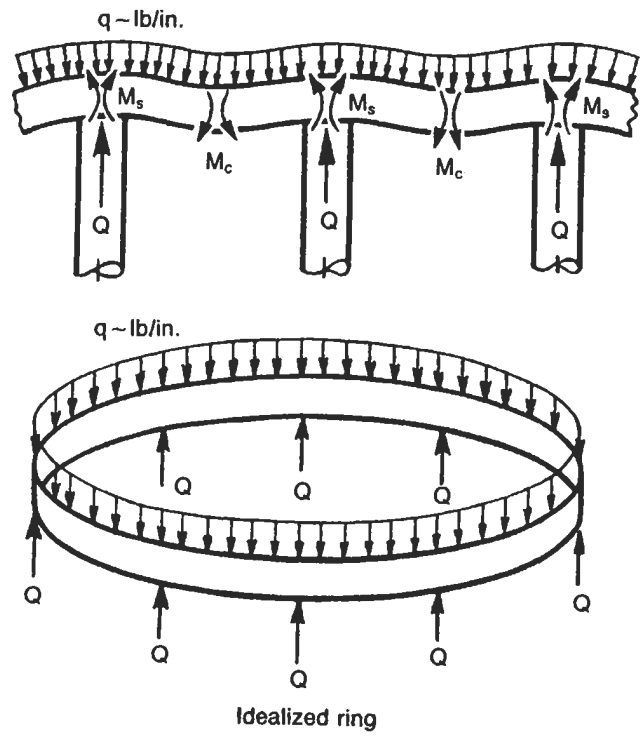

Idealized ring

Figure 4-8. Dimension, forces, and loading at a ring girder.

β = location of maximum torsional moment from column, degrees
I_x, I_y = moment of inertia, in.^{4}
τ = torsional shear stress, psi
B_p = bearing pressure, psi
J = polar moment of inertia, in.^{4}
M = bending moment in base plate due to bearing pressure, in.-lb
M_B = horizontal bending moment between posts due to force F, in.-lb
M_c = vertical bending moment between posts due to force Q, in.-lb
M_o = overturning moment of vessel at base of ring beam, in.-lb
M_P = horizontal bending moment at posts due to force F, in.-lb
M_s = vertical bending moment at posts due to force Q, in.-lb
M_T = torsional moment at distance β from post, in.-lb

Table 4-7
Internal Bending Moments

	Due to Force Q				Due to Force F	
No. of Posts	M_s	M_c	M_T	β	M_P	M_B
4	−0.1366 QR	+0.0705 QR	+0.0212 QR	19°-12′	+0.0683 FR	−0.049 FR
6	−0.0889 QR	+0.0451 QR	+0.0091 QR	12°-44′	+0.0164 FR	−0.013 FR
8	−0.0662 QR	+0.0333 QR	+0.0050 QR	9°-33′	+0.0061 FR	−0.0058 FR
10	−0.0527 QR	+0.0265 QR	+0.0032 QR	7°-37′	+0.0030 FR	−0.0029 FR
12	−0.0438 QR	+0.0228 QR	+0.0022 QR	6°-21′	+0.0016 FR	−0.0016 FR
16	−0.0328 QR	+0.0165 QR	+0.0013 QR	4°-46′	+0.0007 FR	−0.0007 FR

1. Values in table due to force Q are based on *Walls, Bins, and Grain Elevators* by M.S. Ketchum, McGraw-Hill Book Co., 1929. Coefficients have been modified for force Q rather than weight W.
2. Values in table due to force F are based on "Stress Analysis of the Balcony Girder of Elevated Water Tanks Under Earthquake Loads" by W.E. Black; Chicago Bridge and Iron Co., 1941.

Formulas

$$M_s = \frac{WR}{N}\left[\frac{1}{\theta} - \frac{0.5}{\tan \theta/2}\right]$$

$$M_c = M_s \cos\frac{\theta}{2} + \frac{WR}{2N}\left[\sin\frac{\theta}{2} - \frac{2\sin^2 \theta/4}{\theta/2}\right]$$

$$M_T = (-)M_s \sin\beta - \frac{WR}{2N}(1 - \cos\beta) + \frac{WR\beta}{2\pi}\left(1 - \frac{\sin\beta}{\beta}\right)$$

$$q_t = \frac{F \sin\phi}{\pi R}$$

$$F_{1,2\ldots} = \frac{2F \sin\alpha_n}{N}$$

F_n is maximum where $\alpha = 90°$ since $\sin 90° = 1$.

$$q = (-)\frac{W}{\pi D} \pm \frac{4M_o}{\pi D^2}$$

$$Q = \frac{\pi D q}{N}$$

Load Diagrams

Vertical Forces on Ring Beam

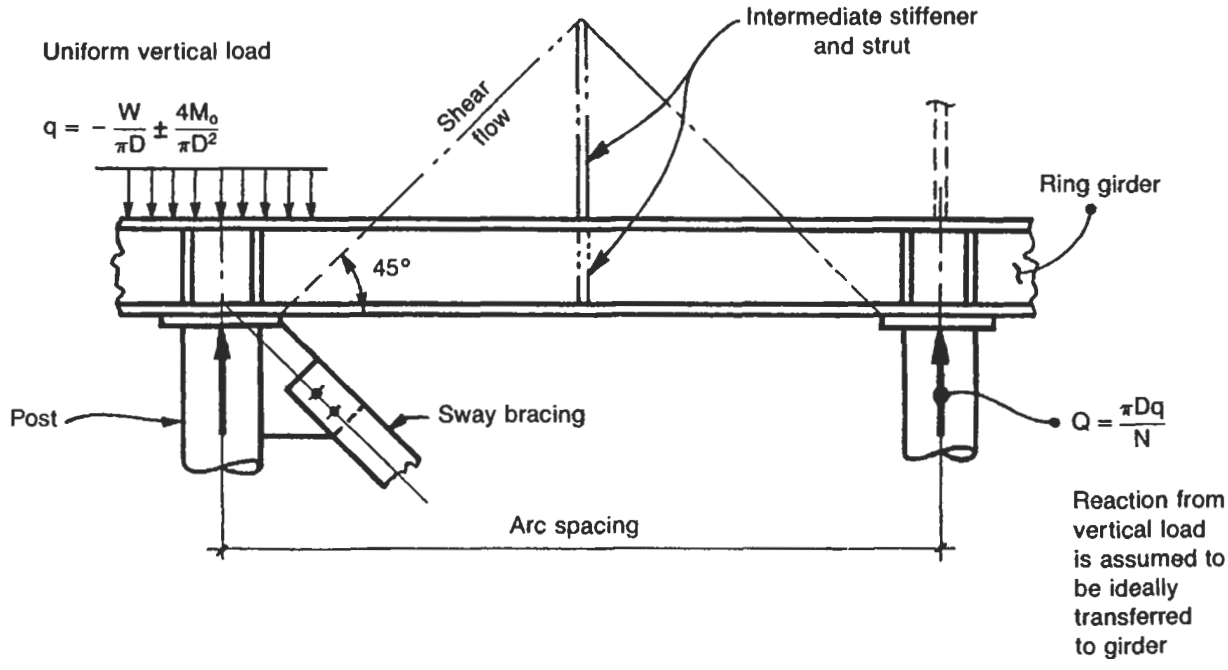

Figure 4-9. Loading diagram for a ring girder: vertical forces on a ring beam.

Horizontal Forces on Ring Beam

In the analysis for in-plane bending moment and thrust, the wind or seismic force is assumed to be transferred to the girder by a sine-distributed tangential shear. (See Figure 4-10.) These loads are resisted by the horizontal reaction components of the sway bracing as shown in Figure 4-11.

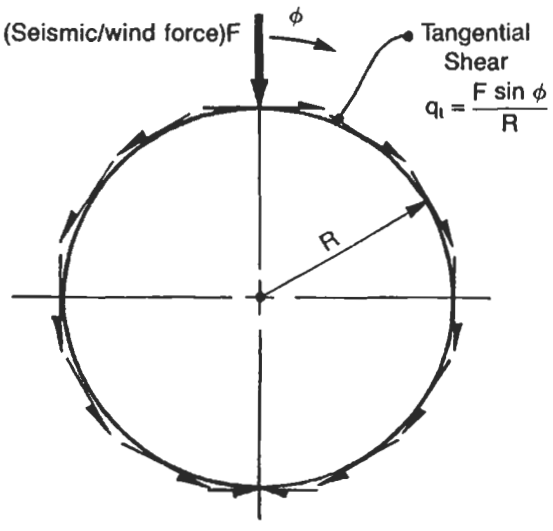

Figure 4-10. Loading diagram for a ring girder: shell to beam.

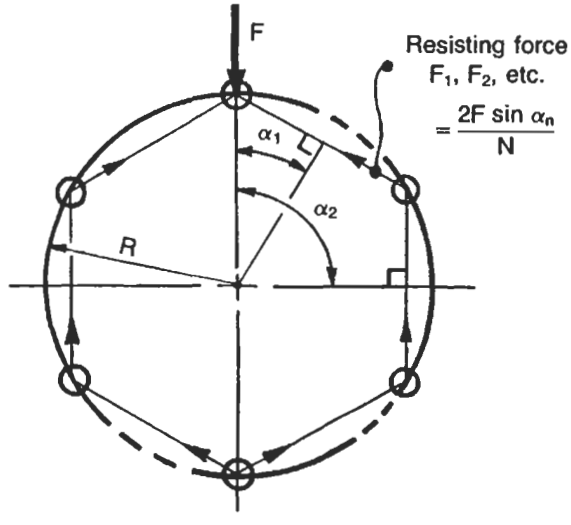

Figure 4-11. Loading diagram for a ring girder: support structure to beam.

Procedure

- *Determine loads q and Q.*

$$q = (-)\frac{W}{D} \pm \frac{4M_o}{\pi D^2}$$

$$Q = \frac{\pi D q}{N}$$

- *Determine bending moments in ring.*

Note: All coefficients are from Table 4-7.

M_s = coefficient × QR

M_c = coefficient × QR

M_T = coefficient × QR

M_P = coefficient × FR

M_B = coefficient × FR

- *Determine properties of ring.*

For torsion the formula for shear stress, τ, is

$$\tau = \frac{M_T C_o}{J}$$

where J = Polar moment of inertia, in.^{4}
$= I_x + I_y$
C_o = Distance to extreme fiber, in.

Note: Box sections are best for resisting torsion.

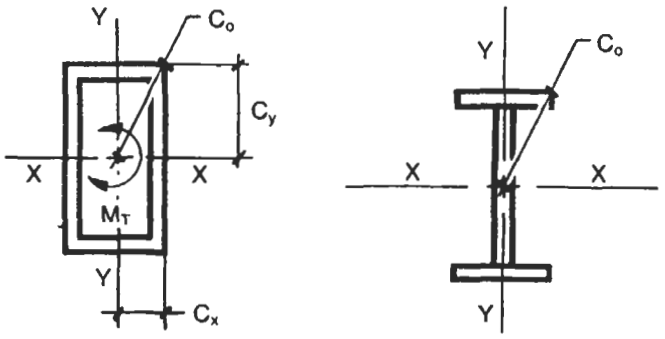

Figure 4-12. Axis and distance of extreme fibers of typical beam sections.

An alternate procedure is suggested by Blodgett in *Design of Welded Structures* [12] for substituting a torsional resistance factor, R_t, for the polar moment of inertia in the equation for stress. The torsional resistance factor, R_t, is determined by dividing up the composite section into its component parts, finding the properties of these components, and adding the individual properties to obtain the sum. An example is shown in Figure 4-13.

R_t for any rectangular section $= \gamma bd^3$. See Table 4-8 for γ.

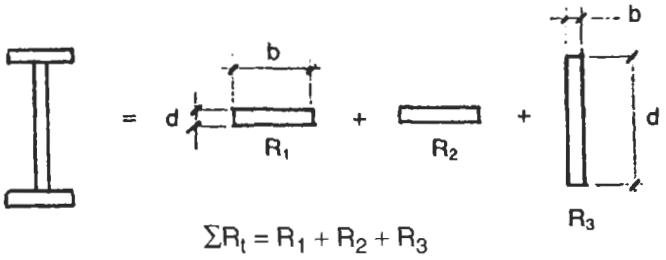

Figure 4-13. Determination of value R_t for typical section.

Table 4-8
Values of Coefficient γ

b/d	γ
1.0	0.141
1.5	0.196
1.75	0.214
2.0	0.229
2.5	0.249
3.0	0.263
4.0	0.281
6.0	0.299
8.0	0.307
10.8	0.313
∞	0.333

Reprinted by permission of the James F. Lincoln Arc Welding Foundation.

- *Stresses in beam.*
Note: Bending is maximum at the posts. Torsion is maximum at β.

$$f_{bx} = \frac{M_s C_y}{I_x}$$

$$f_{by} = \frac{M_P C_x}{I_y}$$

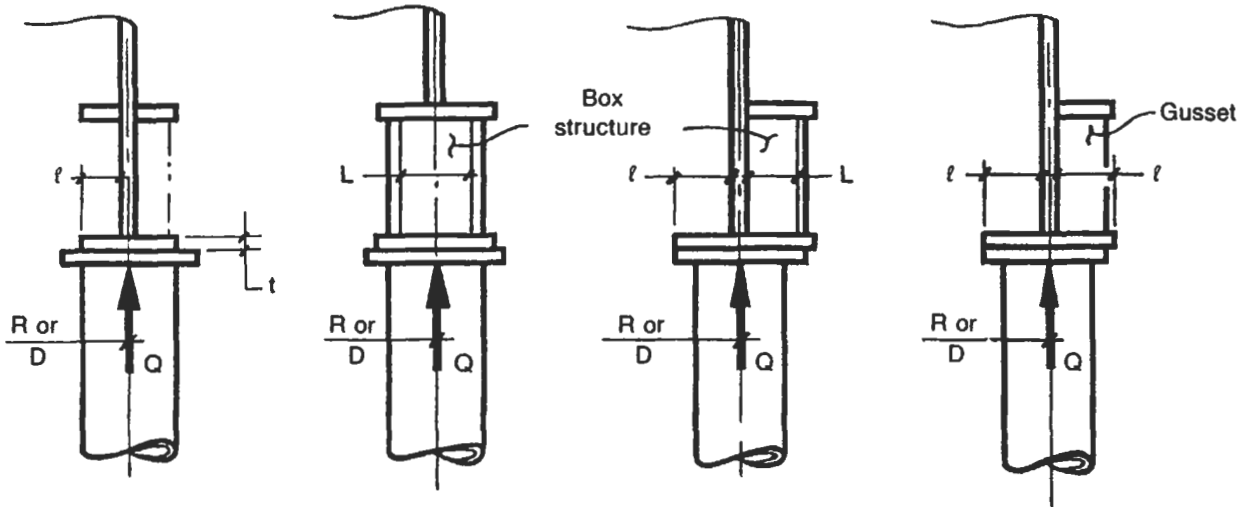

Figure 4-14. Dimensions and loadings for various ring girders.

$$\tau = \frac{M_T C_o}{\sum R_t}$$

- *Additional bending in base plate.*

Additional bending occurs in base plate due to localized bearing of post on ring.

Bearing pressure, B_p, psi

$$B_p = \frac{Q}{A} \pm$$

where A = assumed contact area, area of cap plate or cross-sectional area of post. See Figure 4-14. Assume reaction is evenly distributed over the contact area.
ℓ = Cantilever, in.
L = Semifixed span, in.

Note: Maximum bending is at center of base plate.

- *Moment for cantilever portion.*

$$M = \frac{B_p l^2}{2}$$

- *Moment for semifixed span.*

$$M = \frac{B_p L^2}{10}$$

- *Bending stress, f_b.*

$$f_b = \frac{6M}{t^2}$$

Notes

1. The shell of a column-supported tank, vessel, or bin is considered to be a "circular girder" or "ring beam" uniformly loaded over its periphery and supported by columns equally spaced on the ring circumference.
2. The ring beam (girder) is subjected to compression, bending, and torsion due to the weight of the tank and contents and horizontal wind or seismic force.
3. The maximum bending moment occurs at the supports.
4. The torsional moment M_T will be 0 at the supports and maximum at angular distance β away from supports.

PROCEDURE 4-6

DESIGN OF BAFFLES [12]

Baffles are frequently used in pressure vessels, either vertical or horizontal, to divide the interior volume into different compartments. These compartments may be used to segregate liquids or provide overflow weirs for the separation of liquids. Baffles may be stiffened or unstiffened. When welded across the entire cross section of the vessel, they must be checked that they are not unduly restricting the diametral expansion of the vessel. If the unrestrained radial expansion of the vessel exceeds that of the baffle by more than $\frac{1}{16}$ in. ($\frac{1}{8}$ in. on the diameter), then a "flexible" type of connection between the vessel shell and the baffle should be utilized. Various flexible attachment designs are shown within the procedure.

Baffles should always be designed in the corroded condition. It is typical for welded baffles to be designed with a full corrosion allowance on both sides. If the baffle is bolted in, then one-half the full corrosion allowance may be applied to each side, the logic being that a bolted baffle is removable and therefore replaceable.

The majority of baffles are flat and as a result are very inefficient from a strength standpoint. Deflection is the governing case for flat plates loaded on one side. The preference is to have unstiffened baffles, and they should always be the first choice. This will be acceptable for small baffles. However, for larger baffles, as the baffle thickness becomes excessive, stiffeners offer a more economical design. Therefore stiffeners are frequently used to stiffen the baffle to prevent the thickness of the baffle from becoming excessive. The number, size, and spacing of stiffeners are dependent on the baffle thickness selected. There is a continual trade-off between baffle thickness and stiffener parameters.

The design of a baffle with stiffeners is an iterative process. The procedure for the design of the stiffeners is first to divide the baffle into "panel" sections that are rigid enough to withstand the pressure applied on one side. Each individual panel is checked as a flat plate of the dimensions of the panel. The stiffeners are assumed to be strong enough to provide the necessary edge support for the panel.

The stiffeners themselves are designed next. A section of the baffle is assumed as acting with the stiffener and as contributing to the overall stiffness. This combined section is known as the *composite* stiffener. The composite section is checked for stress and deflection. Both vertical and horizontal stiffeners can be added as required.

If required, an alternate design is assumed based on a thicker or thinner baffle and checked until a satisfactory design is found. There is no "right" answer; however, it should be noted that the thinner the baffle, the greater the number of stiffeners. The lightest overall weight is probably the "best" design but may not be the least expensive due to the welding costs in attaching the stiffeners.

One alternative to a flat baffle with stiffeners is to go to a curved baffle. A curved baffle works best as a vertical baffle in a vertical vessel. The curved baffle takes pressure from either side wall. If the pressure is on the concave side the baffle is in tension. If the pressure is on the convex side, the baffle is in compression.

There are various tables given in this procedure for flat plate coefficients. Flat plate coefficients are utilized to determine the baffle thickness or a panel thickness. Each table is specific for a given condition and loading.

Notation

A_p = area of baffle working with stiffener, in.^{2}
A_s = area of stiffener, in.^{2}
C_p = distance from centroid of composite section to panel, in.
C_s = distance from centroid of composite section to stiffener, in.
E = modulus of elasticity, psi
F_b = allowable bending stress, psi
I = moment of inertia, composite, in.^{4}
I_s = moment of inertia, stiffener, in.^{4}
l = length of baffle that works with the stiffener, in.
M = moment, in.-lb
n = number of welds attaching stiffener
P = vessel internal pressure, psig
p = maximum uniform pressure, psi
p_n = uniform pressure at any elevation, a_n, psi
R_m = vessel mean radius, in.
S_g = specific gravity of contents
t = thickness, shell, in.
t_b = thickness, baffle, in.
t_s = thickness, stiffener, in.
V = shear load, lb
w = required fillet weld size, in.
α = thermal coefficient of expansion, in./in./°F
β,γ = flat plate coefficients
ΔT = differential temperature (design temperature minus 70°F), °F
σ_b = bending stress in baffle, psi
σ_s = bending stress in stiffener, psi
Δ_n = radial expansion, in.
δ = deflection, in.
δ_a = maximum allowable deflection, in.

Baffle Dimensions

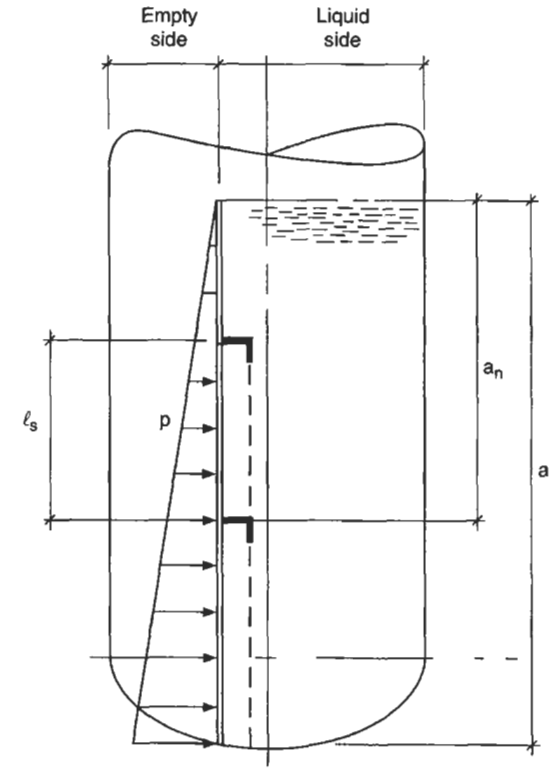

Vertical Vessel

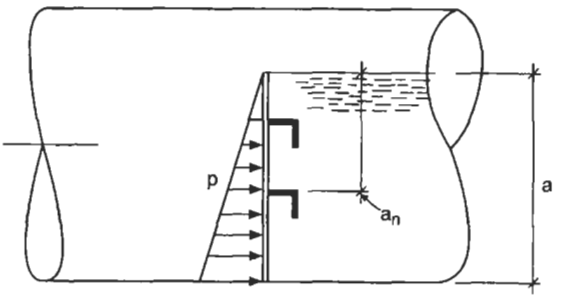

Horizontal Vessel

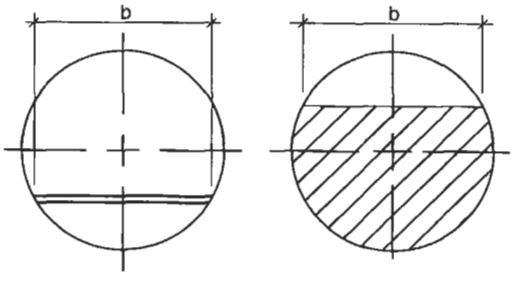

Vertical Vessel Horizontal Vessel

Table 4-8
Flat Plate Coefficients

Case 1: One short edge free, three edges simply supported, uniformly decreasing load to the free edge

a/b	0.25	0.5	0.75	1	1.5
Coefficient					
β_1	0.05	0.11	0.16	0.2	0.28
γ_1	0.013	0.026	0.033	0.04	0.05
a/b	2	2.5	3	3.5	4
Coefficient					
β_1	0.32	0.35	0.36	0.37	0.37
γ_1	0.058	0.064	0.067	0.069	0.07

Equations

$$\sigma_b = \frac{\beta_1 p b^2}{t^2}$$

$$\delta = \frac{p\gamma_1 b^4}{E t_b^4}$$

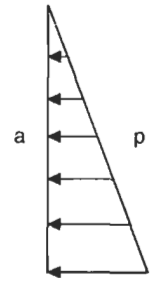

From Ref. 12, Section 6.5-4, Case 4d.

Case 2: All edges simply supported, uniform decreasing load

a/b	0.25	0.5	0.75	1	1.5
Coefficient					
β_2	0.024	0.08	0.12	0.16	0.26
γ_2	0	0	0.01	0.02	0.04
a/b	2	2.5	3	3.5	4
Coefficient					
β_2	0.32	0.35	0.37	0.38	0.38
γ_2	0.056	0.063	0.067	0.069	0.07

$$\sigma_b = \frac{\beta_2 p b^2}{t^2}$$

$$\delta = \frac{p\gamma_2 b^4}{E t_b^4}$$

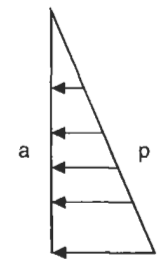

From Ref. 12, Section 6.5-4, Case 4c.

Case 3: All edges simply supported, uniform load

a/b	1	1.25	1.5	1.75	2
Coefficient					
β_3	0.287	0.376	0.452	0.569	0.61
γ_3	0.0443	0.0616	0.077	0.1017	0.1106
a/b	2.5	3	4	5	Infinity
Coefficient					
β_3	0.65	0.713	0.741	0.748	0.75
γ_3	0.125	0.1336	0.14	0.1416	0.1422

$$\sigma_b = \frac{\beta_3 p b_n^2}{t^2}$$

$$\delta = \gamma_3\left(\frac{p}{E}\right)\left(\frac{b_n^4}{t^3}\right)$$

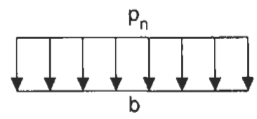

- Assume p as a uniform load at center of plate.
- $A_n > b_n$

From Ref. 12, Section 6.5-4, Case 4a.

Unstiffened Baffle Check

- *Find load, p.*

$$p = \frac{62.4aS_g}{144}$$

- *Find baffle thickness, t_b.*

$$t_b = \sqrt{\frac{\beta_1 p b^2}{F_b}}$$

- *Find baffle deflection, δ.*

$$\delta = \frac{p\gamma_1 b^4}{Et_b^3}$$

Limit deflection to the smaller of $t_b/2$ or b/360. If deflection is excessive then:

a. Increase the baffle thickness.
b. Add stiffeners.
c. Go to curved baffle design.

If stiffeners are added, the first step is to find the maximum "a" and "b" dimensions that will meet the allowable deflection for a given panel size. This will establish the stiffener spacing for both horizontal and vertical stiffeners. The ultimate design is a balance between baffle thickness, stiffener spacing, and stiffener size.

Thermal Check of Baffle

- Vessel radial expansion due to pressure.

$$\Delta_1 = \frac{0.85PR_m}{tE}$$

- Vessel radial expansion due to temperature.

$$\Delta_2 = R_m \alpha \, \Delta T$$

- Thermal expansion of baffle.

$$\Delta_3 = 0.5b\alpha \, \Delta T$$

- Differential expansion.

$$\Delta_4 = \Delta_1 + \Delta_2 - \Delta_3$$

Stiffener Design

Divide baffle into panels to limit deflection to the lesser of $t_b/2$ or b/360. Deflection is calculated based on the appropriate Cases 1 through 3.

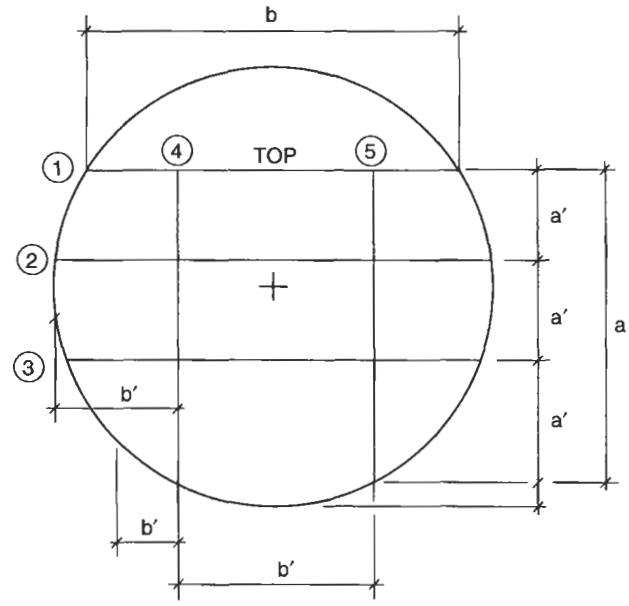

Figure 4-15. Example of stiffener layout.

- *Check baffle for panel size a' × b'.*
- *Check stiffener for length a or b.*

Do's and Don'ts for attaching stiffeners

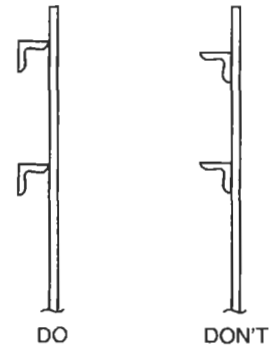

Benefits: Provides added stiffness and no corrosion trap.

Horizontal Stiffener Design

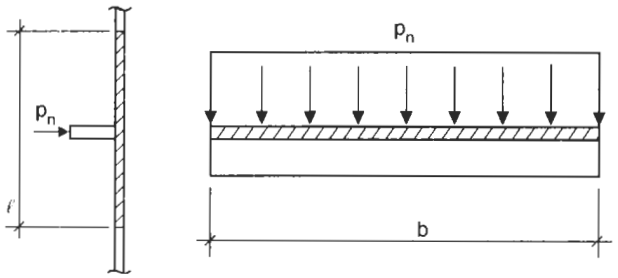

$$p_n = \frac{a_n 62.4 S_g}{144} \qquad M = \frac{p_n l b^2}{8}$$

$$\delta = \frac{5 p_n l b^4}{384 EI} \qquad V = \frac{p_n l b}{2}$$

Vertical Stiffener Design

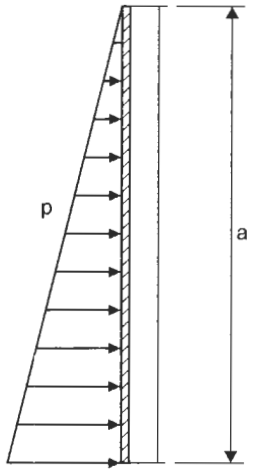

$$p = \frac{a 62.4 S_g}{144}$$

$$\delta = \frac{2.5 p l a^4}{384 EI}$$

$$M = .0642 p l a^2$$

$$V = \frac{p l a}{3}$$

Properties of Stiffener

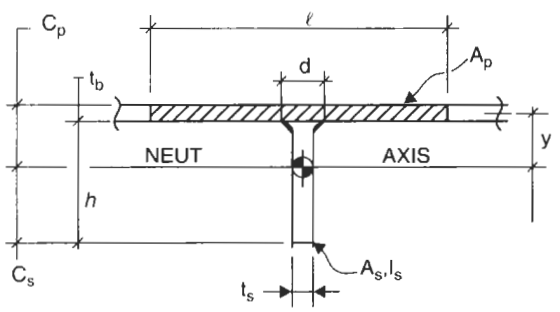

$$A_s = t_s h$$

$$A_p = t_b l$$

$$I_S = \frac{t_s h^3}{12}$$

$$C_p = \frac{A_s y}{A_s + A_p} + \frac{t_b}{2}$$

$$C_s = (h + t_b) - C_p$$

$$I = I_S + \frac{A_p t_b^2}{12} + \frac{A_s A_p y^2}{A_s + A_p}$$

ℓ = lesser of $32 t_b$ or stiffener spacing

Stresses in Baffle/Stiffener

$$\sigma_p = \frac{M C_p}{I}$$

$$\sigma_s = \frac{M C_s}{I}$$

Size Welds Attaching Stiffeners

For E70XX Welds:

$$w = \frac{V dy}{11{,}200 In}$$

Table 4-9
Intermittent Welds

Percent of Continuous Weld	Length of Intermittent Welds and Distance Between Centers		
75%		3–4	
66			4–6
60		3–5	
57			4–7
50	2–4	3–6	4–8
44			4–9
43		3–7	
40	2–5		4–10
37		3–8	
33	2–6	3–9	4–12

Reprinted by permission of the James F. Lincoln Arc Welding Foundation.

For E60XX Welds:

$$w = \frac{Vdy}{9600In}$$

Sample Problem

- Given: Horizontal vessel with a vertical baffle

$P = 250$ psig
D.T. $= 500°F$
material $=$ SA-516-70
C.a. $= 0.125$ in.
JE $= 1.0$
$E = 27.3 \times 10^6$ psi
$\alpha = 7.124 \times 10^{-6}$ in./in./°F
$F_y = 30.8$ ksi
$D = 240$ in.
$F_b = 0.66\ F_y = 20.33$ ksi
$R_m = 120.938$

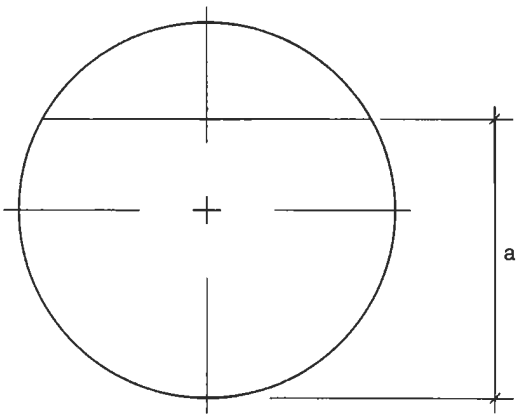

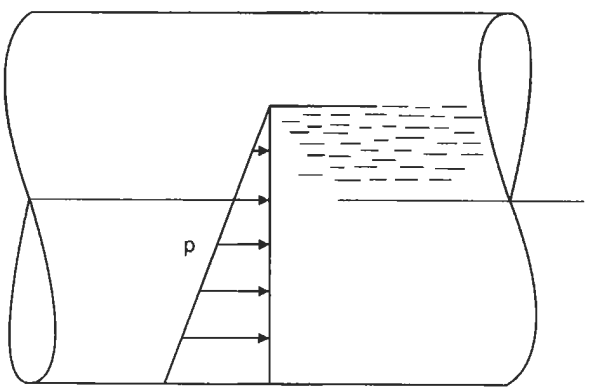

Figure 4-16. Sample problem.

$t_s = 1.75$ in.
$S_g = 0.8$
$a = 15$ ft
$\Delta T = 500 - 70 = 430°F$

- *Find baffle thickness without stiffener.*

$$p = \frac{62.4aS_g}{144} = 5.2 \text{ psi}$$

$$\frac{a}{b} \text{ ratio} = \frac{15}{20} = 0.75$$

From Table 4-8, Case 1:

$$\beta_1 = 0.16 \qquad \gamma_1 = 0.033$$

- *Thickness of baffle, t_b.*

$$t_b = \sqrt{\frac{\beta_1 pb^2}{F_b}} = \sqrt{\frac{0.16(5.2)240^2}{20{,}330}}$$

$$t_b = 1.53 + 0.25 = 1.78$$

No good! Use stiffeners.

- *Assume a suitable baffle thickness and determine maximum panel size.*

$t_b = 0.75$ in. corroded
maximum panel size $= 4$ft $\times$ 4ft

- Maximum pressure, p.

$$p = \frac{13(62.4)0.8}{144} = 4.5 \text{ psi}$$

$$\frac{a}{b} = \frac{4}{4} = 1$$

See Table 4-8, Case 3:

$$\beta_3 = 0.287 \qquad \gamma_3 = 0.0443$$

$$\sigma_b = \frac{\beta_3 pb_n^2}{t^2}$$

$$= \frac{0.287(4.5)\,48^2}{0.75^2} = 5290 \text{ psi} < 20{,}333 \text{ psi}$$

$$\delta = \gamma_3\left(\frac{p}{E}\right)\frac{b_n^4}{t^3} = 0.0443\left(\frac{4.5}{27.3 \times 10^6}\right)\left(\frac{48^4}{0.75^3}\right)$$

$$= 0.092\,\text{in.} < 0.375\,\text{in.}$$

Balance OK by inspection

- *Assume a layout where the maximum stiffener spacing is 4 ft.*

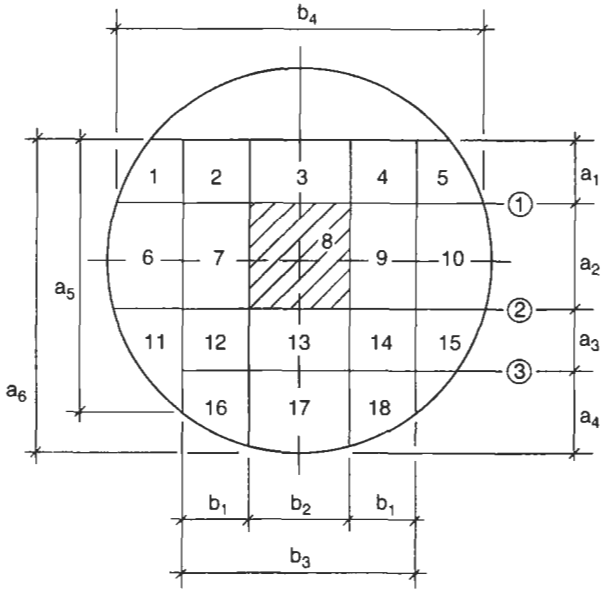

Figure 4-17. Baffle layout for sample problem.

(4) horizontal stiffeners
(4) vertical stiffeners
(18) panels

- *Check horizontal stiffeners.*

Dimensions:

$a_1 = 3$ ft $\quad b_1 = 4$ ft
$a_2 = 4$ ft $\quad b_2 = 4$ ft
$a_3 = 4$ ft $\quad b_3 = 12$ ft
$a_4 = 4$ ft $\quad b_4 = 19.6$ ft
$a_5 = 13$ ft
$a_6 = 14.8$ ft

- *Assume stiffener size, 1 in. × 4 in.*

$y = 2.375\,\text{in.}$

$A_s = t_s h = 1(4) = 4\,\text{in.}^2$

$l = 32t_b = 32(0.75) = 24\,\text{in.} < 48\,\text{in.}$

$A_P = t_b l = 0.75(24) = 18\,\text{in.}^2$

$I_s = \dfrac{bh^3}{12} = \dfrac{1(4^3)}{12} = 5.33\,\text{in}^4.$

$$I = I_s + \frac{A_p t_b^2}{12} + \frac{A_s A_p y^2}{A_s + A_p}$$

$$= 5.33 + 0.633 + 18.46 = 24.42\,\text{in.}^4$$

$$C_p = \frac{A_s y}{A_s + A_p} + \frac{t_b}{2}$$

$$= \frac{4(2.375)}{22} + \frac{0.75}{2} = 0.807\,\text{in.}$$

$$C_s = (h + t_b) - C_p$$

$$= 4 + 0.75 - 0.807 = 3.943$$

Check deflections:

Item	b_n	p_n	δ
1	235.2	1.04	1.49
2	235.2	2.43	3.49
3	144	3.81	0.767

Deflections exceed allowable. No good!

- *Assume a larger stiffener size: WT9 × 59.3.*

$t_f = 1.06 - 0.25 = 0.81$
$t_w = 0.625 - 0.25 = 0.375$

- *Check corroded thickness to find properties of corroded section.* This section would be equivalent to a WT9 × 30. Properties are:

$A_s = 8.82\,\text{in.}^2$

$I_s = 64.7\,\text{in.}^4$

$C_s = 2.16\,\text{in.}$

$H = 9\,\text{in.}$

$C_p = h + t_b - C_s$

$= 9 + 0.75 - 2.16 = 7.59\,\text{in.}$

Table 4-10
Summary of Results for Stress and Deflection in Composite Stiffeners for Sample Problem

Item	Orientation	a_n	b_n	p_n	M	δ	V	σ_p	σ_s
1	Horiz.	235.2	—	1.04	172,595	0.09	2690	3504	997
2	Horiz.	235.2	—	2.43	403,275	0.21	6287	8186	2330
3	Horiz.	144	—	3.81	237,012	0.045	6035	4811	1370
4	Vert.	—	156	4.50	154,674	0.037	5648	3141	894
5	Vert.	—	177.6	5.13	228,539	0.072	6681	6681	1320

$$y = C_p - \frac{t_b}{2}$$

$$= 7.215\,\text{in.}$$

$$I = I_s + \frac{A_p t_b^2}{12} + \frac{A_s A_p y^2}{A_s + A_p}$$

$$= 64.7 + 0.844 + 308.14 = 373.7\,\text{in.}^4$$

- *Check stresses and deflections.* See results in Table 4-10.
- *Stresses and deflections are acceptable.*
- *Check welds.*

$$d = t_s + 2t_w = 0.375 + 2(0.323) = 1.02$$

$$y = 7.215\,\text{in.}$$

$$I = 373.7\,\text{in.}^4$$

$$n = 2$$

$$w = \frac{Vdy}{11{,}200In} = \frac{6681(1.02)7.215}{11{,}200(373.7)2}$$

$$= 0.005 + 0.125 = 0.13\,\text{in.}$$

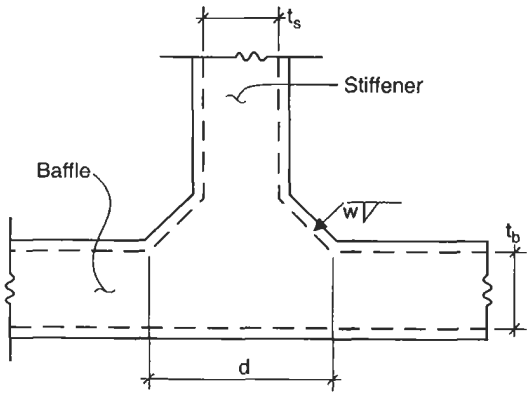

Figure 4-18. Details of weld attaching stiffener.

- *Check thermal expansion of baffle.*

$$\Delta_1 = \frac{0.85PR_m}{tE} = \frac{0.85(250)120.938}{1.75(27.3 \times 10^6)} = 0.00054\,\text{in.}$$

$$\Delta_2 = R_m \alpha\, \Delta T = 120.938(7.124 \times 10^{-6})430 = 0.370\,\text{in.}$$

$$\Delta_3 = 0.5b\alpha\, \Delta T = 0.5(240)(7.124 \times 10^{-6})430 = 0.367\,\text{in.}$$

$$\Delta_4 = \Delta_1 + \Delta_2 - \Delta_3$$

$$= 0.00054 + 0.370 - 0.367 = 0.0035 < 0.06\,\text{in.}$$

Flexible Baffle Design for Full-Cross-Section Baffles

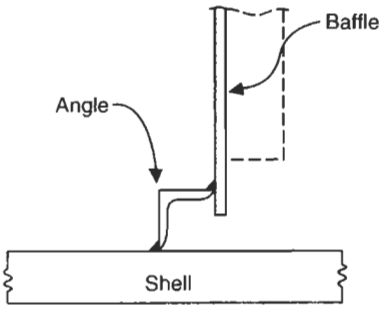

Attached by Angle to Shell

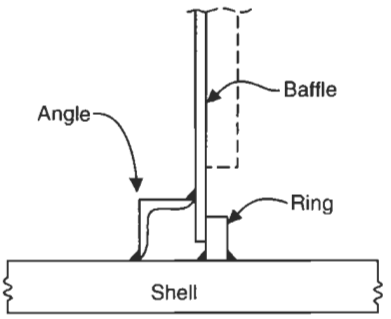

Attached by Angle,
Guided by Ring

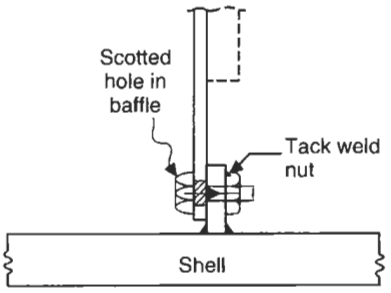

Baffle Bolted to Shell

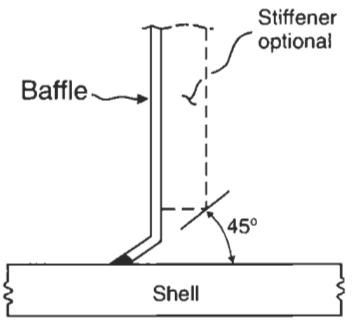

Baffle Welded to Shell

Note: Difficult to fabricate when
t > 3/8" or inside head

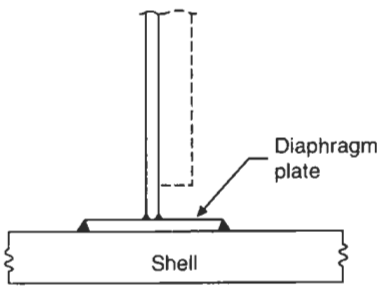

Diaphragm Plate

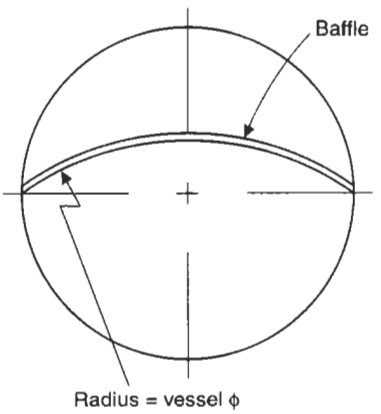

Alternate Construction
Benefits: Easily takes pressure
from either side and good for thermal
expansion

Miscellaneous Baffle Configurations

Vertical Vessels

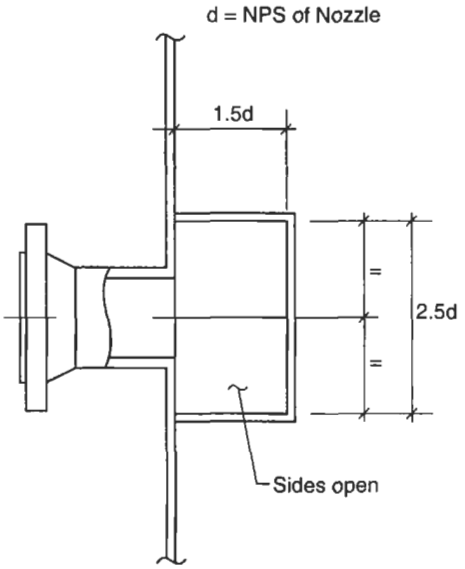

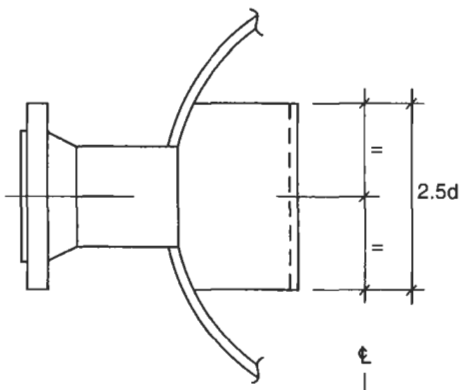

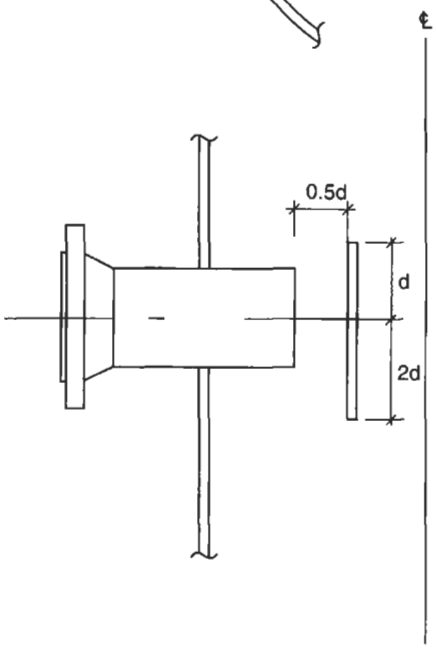

Horizontal Vessels

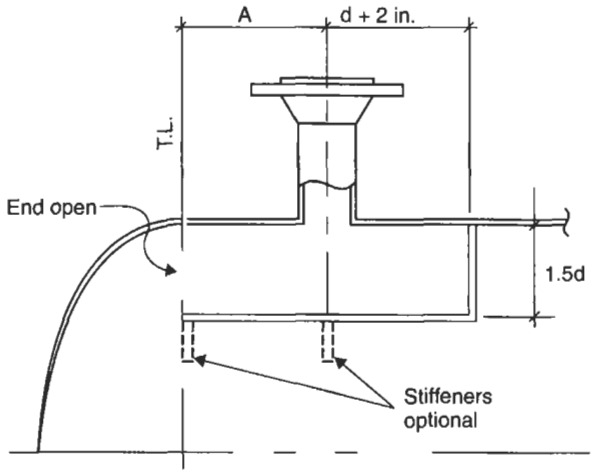

Table 4-11
Dimension "A"

Nozzle Size (in.)	A (in.)	Nozzle Size (in.)	A (in.)
2	5	14	18
3	7	16	20
4	8	18	22
6	10	20	24
8	12	24	28
10	14		
12	16		

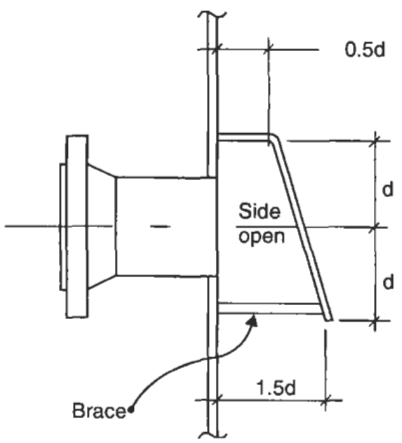

PROCEDURE 4-7

DESIGN OF VESSELS WITH REFRACTORY LININGS [13–16]

The circular cross sections of vessels and stacks provide an ideal shape for supporting and sustaining refractory linings, from a stress standpoint. There are a variety of stresses developed in the lining itself as well as stresses induced in the steel containment shell. Compressive stresses are developed in the lining and are a natural result of the temperature gradient. These compressive stresses help to keep the lining in position during operation. This compressive condition is desirable, but it must not be so high as to damage the lining.

Several idealized assumptions have been made to simplify the calculation procedure.

1. Steady-state conditions exist.
2. Stress–strain relationships are purely elastic.
3. Shrinkage varies linearly with temperature.
4. Thermal conductivity and elastic moduli are uniform throughout the lining.
5. Circumferential stresses are greater than longitudinal stresses in cylindrical vessels and therefore are the only ones calculated here.

The hot face is in compression during operation and heat-up cycles and is in tension during cool-down cycles. The tension and compressive loads vary across the cross section of the lining during heating and cooling phases. The mean will not necessarily result in compression during operation but may be tension or neutral. The hot-face stress should always be compressive and is the maximum compressive stress in the lining. If it is not compressive, it can be made so either by increasing the thickness of the lining or by choosing a refractory with a higher thermal conductivity. Excessive compressive stresses will cause spalling.

The cold face is under tensile stress. This stress often exceeds the allowable tensile stress of the material, and cracks must develop to compensate for the excessive tensile stress. The tensile stress is always maximum at the cold face.

Upon cooling of the vessel, the irreversible shrinkage will cause cracks to propagate through the lining. The shrinkage of the hot face amounts to about 0.001 in./in. crack width at the surface would vary from 0.01 to 0.03 in. These cracks will close early in the reheat cycle and will remain closed under compression at operating temperatures.

Monolithic refractories creep under compressive stress. At stresses much less than the crush strength, the creep rate diminishes with time and approaches zero. Creep occurs under nominally constant stress. When strain instead of stress is held constant, the stress relaxes by the same mechanism that causes creep. Creep rate increases at lower temperatures and drops off with temperature.

Allowable Refractory Stresses

There is no code or standard that dictates the allowable stresses for refractory materials. Refractory suppliers do not have established criteria for acceptable stress levels. In addition, there is very limited experimental information on the behavior of refractory materials under multiaxial stress states.

One criterion that has been used is a factor of safety of 2, based on the minimum specified crush strength of the material at temperature for the allowable compressive stress. The corresponding allowable tensile stress is 40% of the modulus of rupture at 1000°F.

Refractory Failures and Potential Causes of Hot Spots

The following are some potential causes of refractory failure, cracking, and subsequent hot spots.

- Refractory spalling: Spalling can be caused by excessive moisture in the material during heating, by too rapid heat-up or cool-down cycles, by too high a thermal gradient across the lining due to improper design, either too thick a lining or too low a thermal conductivity. This case leads to excessive hot-face compression.
- Poor refractory installation.
- Poor refractory material.
- Excessive deflection or flexing of the steel shell due to pressure, surge, or thermal stresses.
- Differential expansion.
- Excessive thermal gradient.
- Upsets or excursions leading to rapid heating or cooling rates. These should be limited to about 100°F/hr.
- Upsets or excursions leading to temperatures near or exceeding the maximum service temperature.
- Poor design details.
- Poor refractory selection.
- Improper curing or dry-out rates.
- Poor field joints.
- Temperature differential.
- Incorrect anchorage system.
- Vibration.
- Anchor failure.

General Refractory Notes

- Once the hot spots have occurred, there is obviously a heat leak path to the vessel wall. The subsequent heating of the shell locally also affects the anchors. Since the anchors are made of stainless steel, they grow more than the shell and therefore relax their grip on the refractory. This in turn allows the gap between the shell and the refractory to grow.
- Refractory failures are categorized as either tension or compression failures. These failures can result from bending or pure tension/compression loads. In a tension failure the crack is initiated and grows. A "cold joint" is the preferred fix for a tension failure.
- A compression failure will tend to pull the lining away from the wall. A flexible joint with ceramic fiber is a good solution of this type of failure.
- During operation, the hot face is in compression, varying through the thickness to tension against the steel shell. This is caused by thermal expansion of the material and thermal gradient forces developed internally.
- During the cooling cycle, the hot face will be in tension. If the cooling cycle is too rapid or the anchoring too rigid, then the tensile stress of the material becomes critical in resisting cracking.
- Due to low tensile strength, cracking occurs at early stages of load cycles, which ultimately results in load redistribution.
- Temperature loading, such as heat-up, cool-down, and holding periods at lower temperatures, results in stress cycling.
- Refractory properties are nonlinear.
- Compressive strength is practically independent of temperature, whereas tensile strength is highly dependent on temperature.
- Refractory material undergoes a permanent change in volume due to both loss of moisture during the dryout cycle as well as a change in the chemical structure. The effects of moisture loss as well as chemical metamorphosis are irreversible.
- During initial heating, the steel shell has a tendency to pull away from the refractory. The cooler the shell, the less the impact on the refractory. The cooler shell tends to hold the refractory in compression longer.
- The use of holding periods during the heat-up and cool-down cycles results in relaxation of compressive stresses due to creep. However, this same creep may introduce cracks once the lining is cooled off.
- The two most important effects on refractory linings are creep and shrinkage.
- Optimum anchor spacing is 1.5–3 times the thickness of the lining.
- Optimum anchor depth is approximately two-thirds of the lining thickness.

Notation

Shell Properties

D = shell ID, in.
D_s = shell OD, in.
E_s = modulus of elasticity, shell, psi
I_s = moment of inertia, shell, in.^{4}
K_s = thermal conductivity, shell, Btu/in.-hr-ft^2-°F
t_s = thickness, shell, in.
W_s = specific density, steel, pcf
α_s = thermal coefficient of expansion, shell, in./in./°F

Refractory Properties

D_L = refractory OD, in.
d_L = refractory ID, in.
E_L = modulus of elasticity, refractory, psi
F_u = allowable compressive stress, refractory, psi
I_L = moment of inertia, refractory, in.^{4}
K_L = thermal conductivity, refractory, Btu/in.-hr-ft^2-°F
S_{TS}, S_{TL} = irreversible shrinkage of lining @ temperatures T_s, T_L
t_L = thickness, refractory, in.
W_L = specific density of refractory, pcf
α_L = thermal coefficient of expansion, refractory, in./in./°F
μ_L = Poisson's ratio, refractory

General

E_{eq} = modulus of elasticity of composite section, psi
h_i, h_o = film coefficients, inside or outside, Btu/ft^2-hr/°F
P = internal pressure, psig
Q = heat loss through wall, Btu/ft^2-hr
T_a = temperature, outside ambient, °F
T_c = temperature, outside ambient during construction, °F
T_L = temperature, refractory, mean, °F
T_{L1} = temperature, lining, inside, °F

T_o = temperature, internal operating, °F
T_S = temperature, shell, mean, °F
T_{s1} = temperature, shell, inside, °F
T_{s2} = temperature, shell, outside, °F
W = overall weight, lb
W_{eq} = equivalent specific density, pcf
δ = deflection, in.
ε_ϕ = circumferential strain due to internal pressure, in./in.
$\Delta L1$ = thermal expansion, shell, in./in.
$\Delta L2$ = thermal expansion, shell, without lining stress, in./in.
$\Delta L3$ = mean thermal expansion, in./in.
$\Delta L4$ = mean shrinkage, in./in.
$\Delta L5$ = net mean unrestrained expansion, in./in.
$\Delta L6$ = net differential circumferential expansion, in./in.
σ_{L1} = mean compressive stress, refractory, due to restraint of shell, psi
σ_{L2} = stress differential from mean, refractory, due to thermal expansion gradient, psi
σ_{L3} = stress differential from mean, refractory, at hot face due to shrinkage, psi
σ_{L4} = circumferential stress in refractory, at hot face, psi
σ_{L5} = circumferential stress in refractory, at cold face, psi
σ_{sc} = circumferential stress in shell caused by the lining, psi
σ_ϕ = circumferential stress due to internal pressure, psi

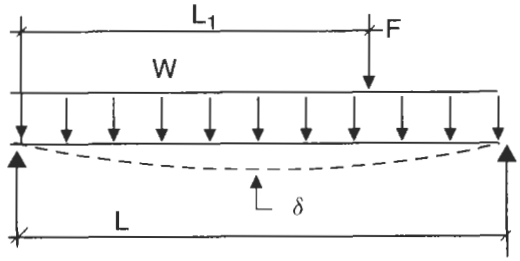

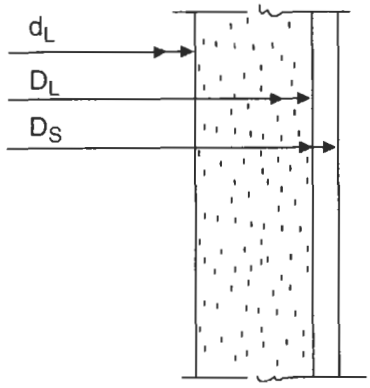

Figure 4-19. Lining dimensions.

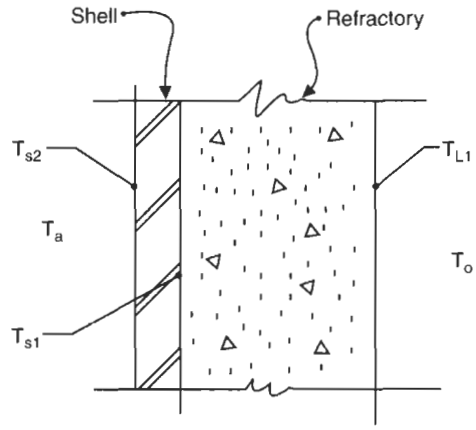

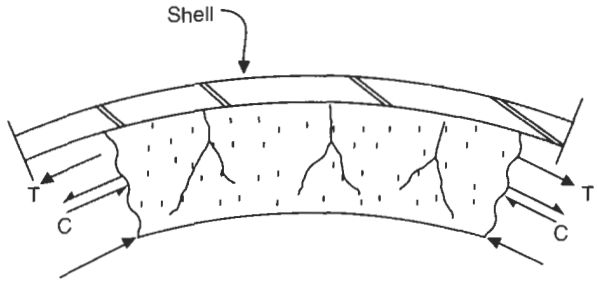

Hoop Stresses

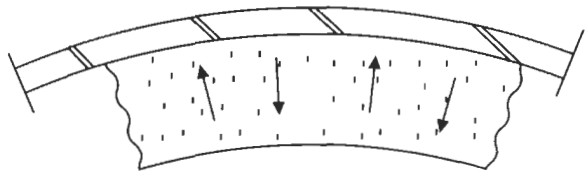

Radial Compressive Stresses

Figure 4-20. Stress/temperatures in wall.

Calculations

Properties of Vessel or Pipe

- *Equivalent specific density, w_{eq}.*

$$w_{eq} = w_s + w_L\left(\frac{DL^2 - d_L^2}{D_s^2 - D_L^2}\right)$$

- *Moment of inertia.*

Steel: $$I_s = \frac{\pi}{64}(D_s^4 - D_L^4)$$

Refractory: $I_L = \frac{\pi}{64}(D_L^4 - d_L^4)$

Composite: $I = I_s + I_L$

- *Equivalent modulus of elasticity, E_{eq}.*

$$E_{eq} = E_s + \frac{E_L I_L}{I_s}$$

Temperatures

- *Heat loss through wall, Q.*

$$Q = \frac{T_o - T_a}{\frac{1}{h_i} + \frac{t_L}{K_L} + \frac{t_s}{K_s} + \frac{1}{h_o}} \quad (1)$$

- *Outside shell temperature, T_{s1}.*

$$T_{s1} = T_a + Q\left(\frac{1}{h_o}\right) \quad (2)$$

- *Inside shell temperatures, T_{s2}.*

$$T_{s2} = T_{s1} + Q\left(\frac{t_s}{K_s}\right) \quad (3)$$

- *Inside lining temperature, T_{L1}.*

$$T_{L1} = T_{s2} + Q\left(\frac{t_L}{K_L}\right) \quad (4)$$

- *Verification of temperature gradient.*

$$T_o = T_{L1} + Q\left(\frac{1}{h_i}\right) \quad (5)$$

- *Mean shell temperature, T_s.*

$$T_s = 0.5(T_{s1} + T_{s2}) \quad (6)$$

- *Mean lining temperature, T_L.*

$$T_L = 0.5(T_{s2} + T_{L1}) \quad (7)$$

Stresses and Strain

- *Circumferential pressure stress, σ_ϕ.*

$$\sigma_\phi = \frac{PD}{2t_s} \quad (8)$$

- *Circumferential pressure strain, ε_ϕ.*

$$\varepsilon_\phi = \frac{0.85\sigma_\phi}{E_s} \quad (9)$$

Thermal Expansions

- *Thermal expansion of shell, $\Delta L1$.*

$$\Delta L1 = \alpha_s(T_s - T_c) \quad (10)$$

- *Total circumferential expansion without lining stress, $\Delta L2$.*

$$\Delta L2 = \varepsilon_\phi + \Delta L1 \quad (11)$$

- *Mean thermal expansion, $\Delta L3$.*

$$\Delta L3 = \alpha_L(T_L - T_c) \quad (12)$$

- *Mean shrinkage, $\Delta L4$.*

$$\Delta L4 = 0.5(S_{TS} + S_{TL}) \quad (13)$$

- *Net mean unrestrained expansion, $\Delta L5$.*

$$\Delta L5 = \Delta L3 - \Delta L4 \quad (14)$$

- *Net differential circumferential expansion, $\Delta L6$.*

$$\Delta L6 = \Delta L2 - \Delta L5 \quad (15)$$

Stresses

- *Mean compressive stress in lining due to restraint of shell, σ_{L1}.*

$$\sigma_{L1} = E_L\,\Delta L6\left(\frac{E_s t_s}{E_L t_L + E_s t_s}\right) \quad (16)$$

- *Differential stress from mean at hot face and cold face of lining due to thermal expansion, σ_{L2}.*

$$\sigma_{L2} = \frac{(E_L \alpha_L)(T_{L1} - T_{s2})}{2(1 - \mu_L)} \quad (17)$$

- *Differential stress from mean at hot and cold faces of lining due to shrinkage, σ_{L3}.*

$$\sigma_{L3} = \frac{E_L(S_{TL} - S_{TS})}{2(1 - \mu_L)} \quad (18)$$

- *Circumferential stress in lining at hot face, σ_{L4}.*

$$\sigma_{L4} = \sigma_{L1} - \sigma_{L2} + \sigma_{L3} \quad (19)$$

- *Circumferential stress in lining at cold face, σ_{L5}.*

$$\sigma_{L5} = \sigma_{L1} + \sigma_{L2} - \sigma_{L3} \quad (20)$$

- *Circumferential stress in shell caused by lining, σ_{sc}.*

$$\sigma_{sc} = -\sigma_{L1}\left(\frac{t_L}{t_s}\right) \quad (21)$$

Stress and Deflection Due to External loads

- *Uniform load, w.*

$$w = \frac{W}{L}$$

- *Deflection due to dead weight alone, δ.*

$$\delta = \frac{5wL^4}{384E_{eq}I}$$

- *Deflection due to concentrated load, δ.*

$$X = \frac{L_1}{L}$$

$$\delta = \frac{FL_1^3}{3E_{eq}I}\left(\frac{3-X}{2X}\right)$$

Table 4-12
Properties of Refractory Materials

Properties	At Temperature (°F)	Material				
		AA-22S	RS-3	RS-6	RS-7	RS-17EC
Modulus of elasticity, E (10^5psi)	230	47	2.1	4.1	3.7	18.9
	500	35	1.5	2.94	2.7	16.8
	1000	16.5	0.84	1.62	1.5	15.5
	1500	7.9	0.5	0.93	0.8	14.1
Density, d (pcf)		170	60	75–85	85–95	130–135
Thermal conductivity, K (BTU/in./hr/sq ft/°F)	500		1.7	2.7	2.5	10
	1000	10.3	1.65	2.85	2.8	6.3
	1500	10.4	1.8	3	3.2	6.9
	2000	10.6		3.2	2	7.7
Coefficient of thermal expansion (10^{-6}in./in./°F)		4.7	4.4		4.7	3.5
Poisson's ratio						0.16
Specific heat (BTU/lb/°F)						0.24
% Permanent linear change	1500	−0.1 TO −0.5	−0.3 TO −0.7	−0.1 TO −0.3	−0.2 TO −0.4	−0.1 TO −0.3
	2000	−0.4 TO −1.1	−0.5 TO −1.1	−0.8 TO −1.2	−0.4 TO −0.6	−0.1 TO −0.3
Modulus of rupture (psi)	1000	1400	100	200	200–300	1500–1900
	1500	1400–2200	100–200	200–500	300–700	1400–1800
	2000		150–250	200–500	200–500	
Cold crush strength (psi)	1000	8000–12000	300	1500	600–1000	9000–12000
	1500	7500–10000	300–600	1500–1800	700–1100	8000–11000
	2000	7000–10000	500–800	1200–1600	600–1000	9000–12000
Allowable compressive stress (psi)	1000	4000	150	750	400	5000
Allowable tensile stress (psi)	1000	560	40	80	100	680

Table 4-13
Given Input for Sample Problems

Shell Properties			Refractory Properties		
Item	**Case 1**	**Case 2**	**Item**	**Case 1**	**Case 2**
D	360 in.	374 in.	t_L	4 in.	4 in.
t_s	0.5 in.	1.125 in.	E_L	0.6×10^6	0.8×10^6
E_s	28.5×10^6	27.7×10^6	α_L	4.0×10^{-6}	4.7×10^{-6}
α_s	6.8×10^{-6}	7.07×10^{-6}	k_L	4.4	3.2
k_s	300	331.2	μ_L	0.25	0.2
μ_s	0.3	0.3	σ_{ult}	2000 psi	100 psi
T_a	80°F	−20°F	S_{TS}	0.00028	0.002
T_c	60°F	50°F	S_{TL}	0.00108	−0.00025
T_D	1100°F	1400°F	h_i	40	40
P	12 PSIG	25 PSIG	h_o	4	3.5

Table 4-14
Summary of Results for Sample Problems

Equation	Variable	Case 1	Case 2	Equation	Variable	Case 1	Case 2
1	Q	860	908	12	Δl_3	2.512×10^{-3}	3.53×10^{-3}
2	T_{s1}	295	239	13	Δl_4	6.8×10^{-4}	1.75×10^{-3}
3	T_{s2}	296	242	14	Δl_5	1.832×10^{-3}	-4.7×10^{-4}
4	T_{L1}	1079	1377	15	Δl_6	-1.02×10^{-4}	1.88×10^{-3}
5	T_o	1100	1400	16	σ_{L1}	−52.4 psi	148.9 psi
6	T_s	591	241	17	σ_{L2}	+/−1251 psi	+/−266 psi
7	T_L	628	810	18	σ_{L3}	+/−320 psi	−112.5 psi
8	σ_ϕ	4320	4155	19	σ_{L4}	−983 psi	−229.6 psi
9	ε_ϕ	1.29×10^{-4}	1.275×10^{-4}	20	σ_{Ls}	879 psi	427.5 psi
10	Δl_1	1.6×10^{-3}	1.28×10^{-3}	21	σ_{sc}	−416 psi	−530 psi
11	Δl_2	1.73×10^{-3}	1.41×10^{-3}				

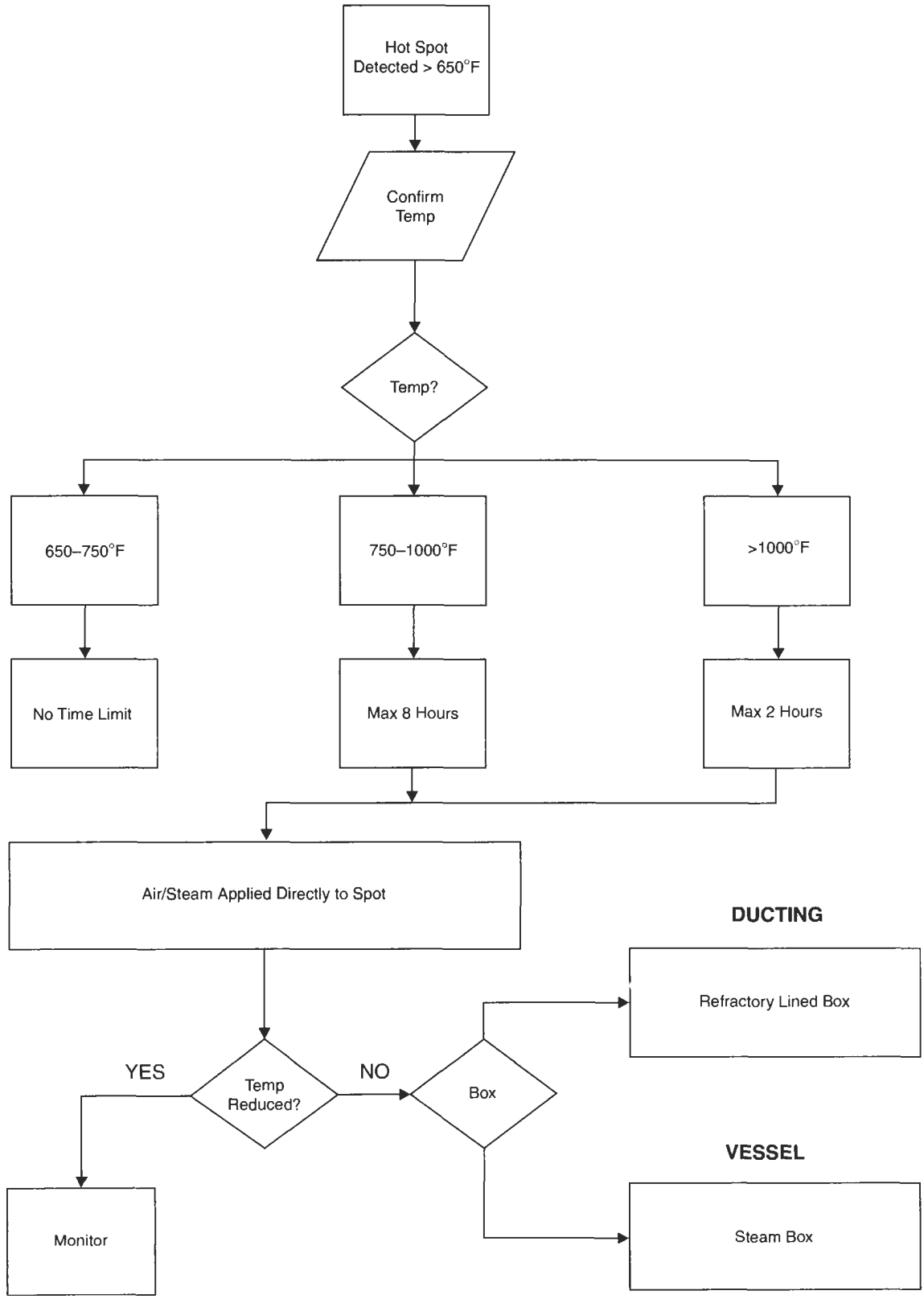

Figure 4-21. Hot Spot Decision Tree.

PROCEDURE 4-8

VIBRATION OF TALL TOWERS AND STACKS [17–27]

Tall cylindrical stacks and towers may be susceptible to wind-induced oscillations as a result of vortex shedding. This phenomenon, often referred to as *dynamic instability*, has resulted in severe oscillations, excessive deflections, structural damage, and even failure. Once it has been determined that a vessel is dynamically unstable, either the vessel must be redesigned to withstand the effects of wind-induced oscillations or external spoilers must be added to ensure that vortex shedding does not occur.

The deflections resulting from vortex shedding are perpendicular to the direction of wind flow and occur at relatively low wind velocities. When the natural period of vibration of a stack or column coincides with the frequency of vortex shedding, the amplitude of vibration is greatly magnified. The frequency of vortex shedding is related to wind velocity and vessel diameter. The wind velocity at which the frequency of vortex shedding matches the natural period of vibration is called the *critical wind velocity*.

Wind-induced oscillations occur at steady, moderate wind velocities of 20–25 miles per hour. These oscillations commence as the frequency of vortex shedding approaches the natural period of the stack or column and are perpendicular to the prevailing wind. Larger wind velocities contain high-velocity random gusts that reduce the tendency for vortex shedding in a regular periodic manner.

A convenient method of relating to the phenomenon of wind excitation is to equate it to fluid flow around a cylinder. In fact this is the exact case of early discoveries related to submarine periscopes vibrating wildly at certain speeds. At low flow rates, the flow around the cylinder is laminar. As the stream velocity increases, two symmetrical eddies are formed on either side of the cylinder. At higher velocities vortices begin to break off from the main stream, resulting in an imbalance in forces exerted from the split stream. The discharging vortex imparts a fluctuating force that can cause movement in the vessel perpendicular to the direction of the stream.

Historically, vessels have tended to have many fewer incidents of wind-induced vibration than stacks. There is a variety of reasons for this:

1. Relatively thicker walls.
2. Higher first frequency.
3. External attachments, such as ladders, platforms, and piping, that disrupt the wind flow around the vessel.
4. Significantly higher damping due to:
   a. Internal attachments, trays, baffles, etc.
   b. External attachments, ladders, platforms, and piping.
   c. Liquid holdup and sloshing.
   d. Soil.
   e. Foundation.
   f. Shell material.
   g. External insulation.

Damping Mechanisms

Internal linings are also significant for damping vibration; however, most tall, slender columns are not lined, whereas many stacks are. The lining referred to here would be the refractory type of linings, not paint, cladding, or some protective metal coating. It is the damping effect of the concrete that is significant.

Damping is the rate at which material absorbs energy under a cyclical load. The energy is dissipated as heat from internal damping within the system. These energy losses are due to the combined resistances from all of the design features mentioned, i.e., the vessel, contents, foundation, internals, and externals. The combined resistances are known as the *damping factor*.

The total damping factor is a sum of all the individual damping factors. The damping factor is also known by other terms and expressions in the various literature and equations and expressed as a coefficient. Other common terms for the damping factor are *damping coefficient*, *structural damping coefficient*, *percent critical damping*, and *material damping ratio*. In this procedure this term is always referred to either as factor D_F or as β.

There are eight potential types of damping that affect a structure's response to vibration. They are divided into three major groups:

Resistance:
- Damping from internal attachments, such as trays.
- Damping from external attachments, such as ladders, platforms, and installed piping.
- Sloshing of internal liquid.

Base support:
- Soil.
- Foundation.

Energy absorbed by the shell (hysteretic):
- Material of shell.
- Insulation.
- Internal lining.

Karamchandani, Gupta, and Pattabiraman give a detailed account of each of these damping mechanisms (see Ref. 17)

for process towers (trayed columns). They estimate the "percent critical damping" at 3% for empty vessels and 5% for operating conditions. The value actually used by most codes is only a fraction of this value.

Design Criteria

Once a vessel has been designed statically, it is necessary to determine if the vessel is susceptible to wind-induced vibration. Historically, the rule of thumb was to do a dynamic wind check only if the vessel L/D ratio exceeded 15 and the POV was greater than 0.4 seconds. This criterion has proven to be unconservative for a number of applications. In addition, if the critical wind velocity, V_c, is greater than 50 mph, then no further investigation is required. Wind speeds in excess of 50 mph always contain gusts that will disrupt uniform vortex shedding.

This criterion was amplified by Zorrilla [18], who gave additional sets of criteria. Criterion 1 determines if an analysis should be performed. Criterion 2 determines if the vessel is to be considered stable or unstable. Criterion 3 involves parameters for the first two criteria.

Criterion 1

- If $W/LD_r^2 < 20$, a vibration analysis must be performed.
- If $20 < W/LD_r^2 < 25$, a vibration analysis should be performed.
- If $W/LD_r^2 > 25$, a vibration analysis need not be performed.

Criterion 2

- If $W\delta/LD_r^2 < 0.75$, the vessel is unstable.
- If $0.75 < W\delta/LD_r^2 < 0.95$, the vessel is probably unstable.
- If $W\delta/LD_r^2 > 0.95$, the structure is stable.

Criterion 3

This criterion must be met for Criteria 1 and 2 to be valid.

- $L_C/L < 0.5$
- $10{,}000\ D_r < 8$
- $W/W_s < 6$
- $V_c > 50$ mph; vessel is stable and further analysis need not be performed.

Criterion 4

An alternative criterion is given in ASME STS-1-2000, "Steel Stacks." This standard is written specifically for stacks. The criterion listed in this standard calculates a "critical vortex shedding velocity," V_{zcrit}. This value is then compared to the critical wind speed, V_c, and a decision made.

- If $V_c < V_{zcrit}$, vortex shedding loads shall be calculated.
- If $V_{zcrit} < V_c < 1.2V_{zcrit}$, vortex shedding loads shall be calculated; however, the loads may be reduced by a factor of $(V_{zcrit}/V_c)^2$.
- If $V_c > 1.2\,V_{zcrit}$, vortex shedding may be ignored.

Equations are given for calculating all of the associated loads and forces for the analysis. This procedure utilizes the combination of two components of β, one β for aerodynamic damping, β_a, and one for steel damping, β_s. The two values are combined to determine the overall β.

This standard does not require a fatigue evaluation to be done if the stack is subject to wind-induced oscillations.

Criterion 5

An alternative criterion is also given in the Canadian Building Code, NBC. The procedure for evaluating effects of vortex shedding can be approximated by a static force acting over the top third of the vessel or stack. An equation is given for this value, F_L, and shown is this procedure.

Dynamic Analysis

If the vessel is determined by this criterion to be unstable, then there are two options:

a. The vessel must be redesigned to withstand the effects of wind-induced vibration such that dynamic deflection is less than 6 in./100 ft of height.
b. Design modifications must be implemented such that wind-induced oscillations do not occur.

Design Modifications

The following design modifications may be made to the vessel to eliminate vortex shedding:

a. Add thickness to bottom shell courses and skirt to increase damping and raise the POV.
b. Reduce the top diameter where possible.
c. For stacks, add helical strakes to the top third of the stack only as a last resort. Spoilers or strakes should protrude beyond the stack diameter by a distance of d/12 but not less than 2 in.
d. Cross-brace vessels together.
e. Add guy cables or wires to grade.
f. Add internal linings.
g. Reduce vessel below dynamic criteria.

Precautions

The following precautions should be taken.

a. Include ladders, platforms, and piping in your calculations to more accurately determine the natural frequency.
b. Grout the vessel base as soon as possible after erection while it is most susceptible to wind vibration.
c. Add external attachments as soon as possible after erection to break up vortices.
d. Ensure that tower anchor bolts are tightened as soon as possible after erection.

Definitions

Critical wind velocity: The velocity at which the frequency of vortex shedding matches one of the normal modes of vibration.

Logarithmic decrement: A measure of the ability of the overall structure (vessel, foundation, insulation, contents, soil, lining, and internal and external attachments) to dissipate energy during vibration. The logarithmic ratio of two successive amplitudes of a damped, freely vibrating structure or the percentage decay per cycle.

Static deflection: Deflection due to wind or earthquake in the direction of load.

Dynamic deflection: Deflection due to vortex shedding perpendicular to the direction of the wind.

Notes

1. See Procedure 3-3 to determine a vessel's fundamental period of vibration (POV).
2. See Procedure 4-4 to determine static deflection.
3. Vessel should be checked in the empty and operating conditions with the vessel fully corroded.
4. Concentrated eccentric loads can be converted to an additional equivalent uniform wind load.
5. L/D ratios for multidiameter columns can be determined as shown in Note 8.
6. A fatigue evaluation should be performed for any vessel susceptible to vortex shedding. A vessel with a POV of 1 second and subjected to 3 hours per day for 30 years would experience 120 million cycles.
7. This procedure is for cylindrical stacks or vessels only, mounted at grade. It is not appropriate for tapered stacks or vessels. There is a detailed procedure in ASME STS-1 for tapered stacks. Multidiameter columns and stacks can be evaluated by the methods shown. This procedure also does not account for multiple vessels or stacks in a row.
8. L/D ratios can be approximated as follows:

$$\frac{L_1D_1 + L_2D_2 + \ldots + L_XD_X + L_{sk}D_{sk}}{D_X^2}$$

where quantities L_xD_x are calculated from the top down.

Table 4-15
Summary of Critical Damping

Item	Description	Case 1: Empty			Case 2: Operating		
		δ	β		δ	β	
				%			%
1	Material	0.07	0.011	1.1	0.07	0.011	1.1
2	Insulation	0.0063	0.001	0.1	0.0063	0.001	0.1
3	Soil	0.125	0.02	2	0.125	0.02	2
4	Attachments	0.0063	0.001	0.1	0.0063	0.001	0.1
5	Liquid				0.094	0.015	1.5
	Total	0.208	0.033	3.34	0.302	0.048	4.84

Sources: Ref. 17.

Table 4-16
Logarithmic Decrement, δ

Type	Description	Soil Type		
		Soft (1)	Medium (2)	Rock/Piles (3)
1	Steel vessel	0.1	0.05	0.03
2	Tower with internals	0.13	0.08	0.035–0.05
3	Tower internals and operations	0.1	0.05	0.035
4	Tower, refractory lined	0.3	0.1	0.04–0.05
5	Tower, full of water	0.3	0.1	0.07
6	Unlined stack	0.1	0.05	0.035
7	Lined stack	0.3	0.1	0.07

Notes:
1. Soft soils $B_p < 1500$ psi, $\beta_F = 0.07$.
2. Medium soils, 1500 psi $< B_p <$ 3000 psi, $\beta_F = 0.03$.
3. Pile foundation, rock, or stiff soils, $\beta_F = 0.005$.

Table 4-17
Values of β

Soil Type	Standard						
	ASCE 7-95	Major Oil Co	ASME STS-1	NBC	Misc. Papers	Gupta	Compress
Soft	0.005	See Table 4-18; 0.004–0.0127	See Note 1 and Table 4-19	Unlined = 0.0016–0.008 Lined = 0.0048–0.0095 See Note 2	See Note 3	See Table 4-15; 0.03–0.05	Default = 2% (0.02)
Medium	0.01						
Rock/ Piles	0.005						

Table 4-18
β Values per a Major Oil Company

Equipment Description	β
Vessels:	
1. Empty without internals	0.0048
2. Empty with tray spacing > 5 ft.	0.0051
3. Empty with tray spacing 3–5 ft	0.0056
4. Empty with tray spacing < 3 ft	0.0064
5. Operating with tray spacing 5–8 ft	0.0116
6. Operating with tray spacing < 5 ft	0.0127
7. Vessel full of liquid	0.018
Stacks mounted at grade	0.004–0.008

Table 4-19
Values of β_s per ASME STS-1

Type of Stack	Damping Value	
	Rigid Support	Elastic Support
Unlined	0.002	0.004
Lined	0.003	0.006

Notes

1.

$$\beta = \beta_a + \beta_s$$

$$\beta_a = \frac{C_f \cdot \rho \cdot D_r \cdot V_z}{4 \cdot \pi \cdot w_r \cdot f_1}$$

β_s = from table

2. For lined and unlined stacks only!

$$\beta = \frac{\delta}{2\pi}$$

3.

$$\beta = \frac{w\delta}{D^2} \quad \text{or} \quad \frac{W\delta}{LD^2}$$

Table 4-20
Coefficient C_f per ASME STS-1

	Surface Texture	L/D		
		1	7	25
$D(q_z)^{0.5} > 2.5$	Smooth	0.5	0.6	0.7
	Rough	0.7	0.8	0.9
	Very rough	0.8	1	1.2
$D(q_z)^{0.5} > 2.5$	All	0.7	0.8	1.2

Table 4-21
Topographic Factors per ASME STS-1

Exposure Category	b	α
A	0.64	0.333
B	0.84	0.25
C	1	0.15
D	1.07	0.111

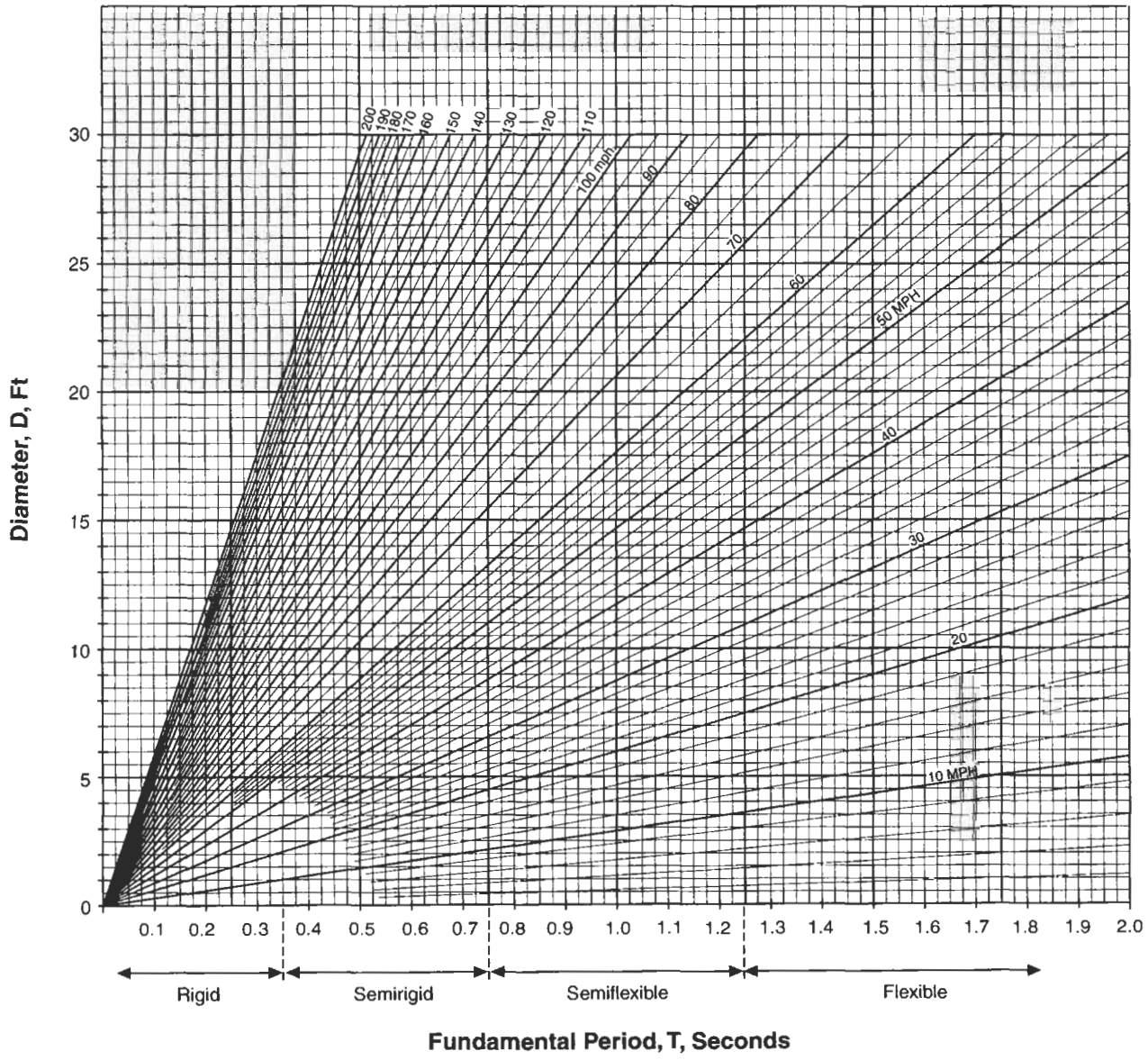

Figure 4-22. Graph of critical wind velocity, V_c.

Notation

B_f = allowable soil bearing pressure, psf
C_f = wind force coefficient, from table
C_1, C_2 = NBC coefficients
D = mean vessel diameter, in.
D_r = average diameter of top third of vessel, ft
E = modulus of elasticity, psi
F_F = fictitious lateral load applied at top tangent line, lb
F_L = equivalent static force acting on top third of vessel or stack, lb
f = fundamental frequency of vibration, Hz (cycles per second)
f_n = frequency of mode n, Hz
f_o = frequency of ovalling of unlined stack, Hz
g = acceleration due to gravity, 386 in./sec^2 or 32 ft/sec^2
I = moment of inertia, shell, in.^{4}
I_F = importance factor, 1.0–1.5
L = overall length of vessel, ft
M_L = overturning moment due to force F_L, ft-lb
M_S = overturning moment due to seismic, ft-lb
M_R = resultant moment, ft-lb
M_w = overturning moment due to wind, ft-lb
M_{wD} = modified wind moment, ft-lb
q_H = wind velocity pressure, psf, per NBC
q_z = external wind pressure, psf per ASME STS-1
S = Strouhal number, use 0.2
T = period of vibration, sec
t = shell thickness, in.
V = basic wind speed, mph
V_c = critical wind velocity, mph
V_{c1}, V_{c2} = critical wind speeds for modes 1 and 2, mph or fps
V_{co} = critical wind speed for ovalling of stacks, ft/sec
V_r = reference design wind speed, mph, per ASME STS-1
V_z = mean hourly wind speed, ft/sec
V_{zcrit} = mean hourly wind speed at $\frac{5}{6}$ L, ft/sec
W = overall weight of vessel, lb
w = uniform weight of vessel, lb/ft
w_r = uniform weight of top third of vessel, lb/ft
α, b = topographic factors per ASME STS-1
β = percent critical damping, damping factor
β_a = aerodynamic damping value
β_f = foundation damping value
β_s = structural damping value
δ = logarithmic decrement
Δ_d = dynamic deflection, perpendicular to direction of wind, in.
Δ_s = static deflection, parallel to direction of wind, in.
ρ = density of air, lb/ft^3 (0.0803) or kg/m^3 (1.2)
λ = aspect ratio, L/D

Miscellaneous Equations

- *Frequency for first three modes, f_n.*

Mode 1: $f_1 = 0.56\sqrt{\frac{gEI}{wL^4}}$

Mode 2: $f_2 = 3.51\sqrt{\frac{gEI}{wL^4}}$

Mode 3: $f_3 = 9.82\sqrt{\frac{gEI}{wL^4}}$

Note: I is in ft^4.

$I = 0.032D^3t$

$f_n = \frac{1}{T}$

- *Frequency for ovalling, f_o.*

$f_o = \frac{680t}{D^2}$

- *Critical wind velocities:*

$V_c = V_{c1} = \frac{f_1 D}{S} = \frac{D}{ST} = \frac{D}{0.2T}$(fps)

$V_c = \frac{3.4D}{T}$(mph)

$V_{c2} = 6.25V_{c1}$

$V_{co} = \frac{f_o D}{2S}$

- *Period of vibration, T, for tall columns and stacks.*

$T = 1.79\sqrt{\frac{wL^4}{EIg}}$

where L, D, and t are in feet.

Procedures

Procedure 1: Zorilla Method

Step 1: Calculate structural damping coefficient, β.

$$\beta = \frac{W\delta}{LD_r^2} \quad \text{or} \quad \beta = \frac{w\delta}{D_r^2}$$

Step 2: Evaluate:

- If $W/LD_r^2 < 20$, a vibration analysis must be performed.
- If $20 < W/LD_r^2 < 25$, a vibration analysis should be performed.
- If $W/LD_r^2 > 25$, a vibration analysis need not be performed.
- If $W\delta/LD_r^2 < 0.75$, the vessel is unstable.
- If $0.75 < W\delta/LD_r^2 < 0.95$, the vessel is probably unstable.
- If $W\delta/LD_r^2 > 0.95$, the structure is stable.

Step 3: If $\beta < 0.95$, check critical wind velocity, V_c.

$$V_c = \frac{0.682D_r}{TS} = \text{fps}$$

$$V_c = \frac{3.41D_r}{T} = \text{mph}$$

If $V_c > V$, then instability is expected.

Step 4: Calculate dynamic deflection, Δ_d.

$$\Delta_d = \frac{(2.43)(10^{-9})L^5V_c^2}{W\delta D_r}$$

If $\Delta_d < 6$ in./100 ft, then the design is acceptable as is. If $\Delta_d > 6$ in./100 ft, then a "design modification" is required.

Procedure 2: ASME STS-1 Method

Step 1: Calculate damping factor, β.

$$\beta = \beta_a + \beta_s$$

Step 2: Calculate critical wind speed, V_c.
Step 3: Calculate critical vortex shedding velocity, V_{zcrit}.

$$V_{zcrit} = b\left(\frac{Z_{cr}}{33}\right)\frac{\alpha 22}{15}(V_r)$$

where

$$Z_{cr} = \frac{5L}{6}$$

$$V_r = \frac{V}{I_f}$$

b and α are from table.

Step 4: Evaluate:

- If $V_c < V_{zcrit}$, then vortex shedding loads shall be calculated.
- If $V_{zcrit} < V < 1.2V_{zcrit}$, then vortex shedding loads shall be calculated; however, loads may be reduced by a factor of $(V_{zcrit}/V_c)^2$.
- If $V_c > 1.2\ V_{zcrit}$, then vortex shedding may be ignored.

Step 5: To evaluate vortex shedding loads, refer to ASME STS-1, Appendixes E-5 and E-6.

Procedure 3: NBC

Step 1: Calculate critical wind velocity, V_c. No analysis need be performed if $V_c > V$.

Step 2: Calculate coefficients C_1 and C_2.

- If $\lambda > 16$, then

  $C_1 = 3$ and $C_2 = 0.6$

- If $\lambda < 16$, then

  $$C_1 = \frac{3\sqrt{\lambda}}{4}$$

- If $V_c < 22.37$ mph and $\lambda > 12$, then

  $C_1 = 6$ and $C_2 = 1.2$

Step 3: If

$$\beta > \frac{C_2\rho D_r^2}{w_r}$$ then no dynamic analysis need be performed.

If

$$\beta < \frac{C_2\rho D_r^2}{w_r}$$ then dynamic analysis should be performed.

Step 4: If a dynamic analysis is required, calculate an equivalent static force to be applied over the top third of the column, F_L.

$$F_L = \frac{C_1 q_H D_r}{\sqrt{\lambda}\sqrt{\frac{C_2\rho D_r^2}{w_r}}}$$

Step 5: Determine moment due to force, F_L.

$$M_L = \frac{5F_L L^2}{18}$$

Step 6: Calculate modified wind moment, M_{WD}.

$$M_{WD} = M_W\left(\frac{V_C}{V_W}\right)^2$$

Step 7: Calculate resultant moment, M_R.

$$M_R = \sqrt{M_L^2 + M_{WD}^2}$$

Step 8: If $M_R > M_S$ or M_W, then compute fictitious force, F_F.

$$F_F = \frac{M_R}{L}$$

Step 9: Check vessel with lateral load, F_F, applied at the top tangent line of the vessel. If the stresses are acceptable, the vessel is OK. If the stresses are not acceptable, then the thicknesses must be revised until the stresses are acceptable.

Example No. 1

Given

$w = 146.5$ kips

$T = 0.952$ sec

$S = 0.2$

$\delta = 0.08$

$$D_r = \frac{10 + 6.5}{2} = 8.25 \text{ ft}$$

Soil type: medium.

- *Average weight of top third of column.*

$$\frac{L}{3} = \frac{198}{3} = 66 \text{ ft}$$

$$\frac{W_t}{66} = \frac{35{,}000}{66} = 530 \text{ lb/ft}$$

- *Dynamic check.*

$$\frac{W}{LD_r^2} = \frac{146{,}500}{198(8.25^2)} = 10.87 < 20$$

Therefore an analysis must be performed.

$$\beta = \frac{W\delta}{LD_r^2} = 0.08(10.87) = 0.87$$

Probably stable, proceed.

- *Critical wind speed, V_c.*

$$V_c = \frac{D_r}{TS} = \frac{8.25}{0.952(0.2)} = 43.33 \text{ fps}$$

$$43.33 \text{ fps}(0.682) = 29.55 \text{ mph}$$

- *Dynamic deflection, Δ_d.*

$$\Delta_d = \frac{(2.43)(10^{-9})L^5V_c^2}{W\delta D_r}$$

$$\Delta_d = \frac{(2.43)(10^{-9})198^5(29.55^2)}{146{,}500(0.08)8.25} = 6.68 \text{ in.}$$

Dimensions

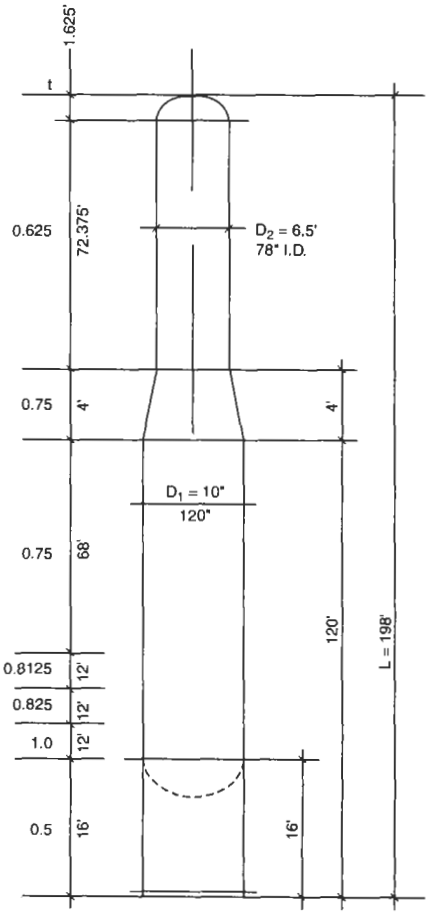

Example No. 1: Wind Design, Static Deflection, UBC-97, 100 MPH Zone

F_n	A_f	P	H			H	R_m	t	I
17,405	395.2	44	160		I_7	124	39.313	0.625	119,295
17,534	416	42.15	120		I_6	120	60.375	0.75	518,540
11,012	280	39.33	100	VESSEL	I_5	52	60.375	0.75	518,540
10,550	280	37.68	80						
10,088	280	36.03	60						
9430	280	33.68	40		I_4	40	60.4	0.8125	562,450
4319	140		30		I_3	28	60.438	0.875	608,844
2028	70	28.97	25						
1962	70	28.03	20		I_2	16	60.5	1	695,690
1835	70	26.21	15						
4495	180	24.97	0		I_1	0	60.25	0.5	348,551

Example No. 1: Values for computation of static deflection

Section n	L_n (ft)	L_n (in.)	I_n	L_n^4/I_n	L_n^4/I_{n-1}
1	198	2376	343,551	92,767,217	
2	182	2184	695,690	32,703,540	66,224,596
3	170	2040	606,844	28,539,319	24,894,586
4	158	1896	562,450	22,975,735	21,294,932
5	146	1752	518,540	18,169,967	16,751,453
6	78	936	518,540	1,480,202	1,480,202
7	74	888	119,295	5,212,302	1,199,139
Σ				201,848,283	131,844,908

- Static deflection due to wind, Δ_s.

$$\Delta_s = \left(\sum \frac{L_n^4}{I_n} - \sum \frac{L_n^4}{I_n - 1}\right)\left(\frac{w_{min}}{8E} + 5.5\frac{w_{max} - w_{min}}{60E}\right)$$

$$\Delta_s = (70{,}003{,}375)\left[1.143(10^{-7}) + 4.44(10^{-8})\right] = 11.11\,\text{in.} < 6\,in./100\,\text{ft}$$

$$w_{min} = \frac{F_n}{L_n} = \frac{4495}{15} = 300\,\text{lb/ft} = 24.97\,\text{lb/in.} \qquad E = 27.3(10^6)\,\text{psi}$$

$$w_{max} = \frac{17{,}405}{38} = 458\,\text{lb/ft} = 38.2\,\text{lb/in.}$$

REFERENCES

1. McBride, W. L., and Jacobs, W. S., "Design of Radial Nozzles in Cylindrical Shells for Internal Pressure," *Journal of Pressure Vessel Technology*, Vol. 2, February 1980.
2. ASME Boiler and Pressure Vessel Code, Section VIII, Division 1, American Society of Mechanical Engineers, 1995.
3. Catudal, F. W., and Schneider, R. W., "Stresses in Pressure Vessels with Circumferential Ring Stiffeners," *Welding Journal Research Supplement*, 1957.
4. Wolosewick, F. E., "Supports for Vertical Pressure Vessels," Part III, *Petroleum Refiner*, October 1941.
5. Hicks, E. V. (Ed.), "Pressure Vessels," ASME 1980 presented at Energy Sources Technology Conference and Exhibition.
6. Miller, U. R., "Calculated Localized Stresses in Vacuum Vessels," *Hydrocarbon Processing*, April 1977.
7. Youness, A., "New Approach to Tower Deflection," *Hydrocarbon Processing*, June 1970.
8. Lambert, F. W., *The Theory and Practical Design of Bunkers*, British Constructional Steelwork Assoc., Ltd., London, pp. 32–33.
9. Ketchum, M. S., *Walls, Bins, and Grain Elevators*, 3rd Edition, McGraw-Hill Book Co., New York, 1929, pp. 206–211.
10. Blake, Alexander, "Rings and Arcuate Beams," *Product Engineering*, January 7, 1963.
11. Pirok, J. N., and Wozniak, R. S., *Structural Engineering Handbook*, McGraw-Hill Book Co., 1968, Section 23.
12. Blodgett, O., *Design of Welded Structures*, The James F. Lincoln Arc Welding Foundation, 1975, Section 2.6.
13. Wygant, J. F., and Crowley, M. S., "Designing Monolithic Refractory Vessel Linings," *Ceramic Bulletin*, Volume 43, No. 3, 1964.
14. British Ceramic Research Assoc., Thermomechanical Behavior of Refractory Castable Linings, Technical Note No. 320, March 1981.
15. Buyukozturk, O., "Thermomechanical Behavior of Refractory Concrete Linings," *Journal of the American Ceramic Society*, Volume 65, No. 6, June 1982.
16. Truong, K. T., "Improve FCCU Refractory Lined Piping Design," *Hydrocarbon Processing*, July 1998.
17. Karamcharandi, K. C., Gupta, N. K., and Pattabiraman, J., "Evaluation of Percent Critical Damping of Process Towers," *Hydrocarbon Processing*, May 1982.
18. Freese, C. E., "Vibration of Vertical Pressure Vessels," *Journal of Engineering for Industry*, February 1959.
19. Zorilla, E. P., "Determination of Aerodynamic Behavior of Cantilevered Stacks and Towers of Circular Cross Sections," ASME technical paper #71-PET-36, 1971.
20. DeGhetto, K. and Long, W. "Check Stacks for Dynamic Stability," *Hydrocarbon Processing*, February 1966.
21. Staley, C. M., and Graven, G. G., "The Static and Dynamic Wind Design of Steel Stacks," ASME technical paper #72-PET-30, 1972.
22. Mahajan, K. K., "Analyze Tower Vibration Quicker," *Hydrocarbon Processing*, May 1979.
23. Smith, J. O., and McCarthy, J. N., "Dynamic Response of Tall Stacks to Wind Excitation," ASME Technical paper, 63-WA-248, 1964.
24. Bertolini, I. S., "Wind Action on Towers and Stacks for Petrochemical Plants," published in *Quaderni Pignone* 17.
25. Bednar, H. H., *Pressure Vessel Design Handbook*, Van Nostrand Reinhold Co, 1981.
26. "Steel Stacks," ASME STS-1-2000, American Society of Mechanical Engineers, 2001.
27. *National Building Code*, Canada.

5
Local Loads

Stresses caused by external local loads are a major concern to designers of pressure vessels. The techniques for analyzing local stresses and the methods of handling these loadings to keep these stresses within prescribed limits has been the focus of much research. Various theories and techniques have been proposed and investigated by experimental testing to verify the accuracy of the solutions.

Clearly the most significant findings and solutions are those developed by professor P. P. Bijlaard of Cornell University in the 1950s. These investigations were sponsored by the Pressure Vessel Research Committee of the Welding Research Council. His findings have formed the basis of Welding Research Council Bulletin #107, an internationally accepted method for analyzing stresses due to local loads in cylindrical and spherical shells. The "Bijlaard Curves," illustrated in several sections of this chapter, provide a convenient and accurate method of analysis.

Other methods are also available for analyzing stresses due to local loads, and several have been included herein. It should be noted that the methods utilized in WRC Bulletin #107 have not been included here in their entirety. The technique has been simplified for ease of application. For more rigorous applications, the reader is referred to this excellent source.

Since this book applies to thin-walled vessels only, the detail included in WRC Bulletin #107 is not warranted. No distinction has been made between the inside and outside surfaces of the vessel at local attachments. For vessels in the thick-wall category, these criteria would be inadequate.

Other methods that are used for analyzing local loads are as follows. The designer should be familiar with these methods and when they should be applied.

1. Roark Technical Note #806.
2. Ring analysis as outlined in Procedure 5-1.
3. Beam on elastic foundation methods where the elastic foundation is the vessel shell.
4. Bijlaard analysis as outlined in Procedures 5-4 and 5-5.
5. WRC Bulletin #107.
6. Finite element analysis.

These methods provide results with a varying degree of accuracy. Obviously some are considered "ball park" techniques while others are extremely accurate. The use of one method over another will be determined by how critical the loading is and how critical the vessel is. Obviously it would be uneconomical and impractical to apply finite element analysis on platform support clips. It would, however, be considered prudent to do so on the vessel lug supports of a high-pressure reactor. Finite element analysis is beyond the scope of this book.

Another basis for determining what method to use depends on whether the local load is "isolated" from other local loads and what "fix" will be applied for overstressed conditions. For many loadings in one plane the ring-type analysis has certain advantages. This technique takes into account the additive overlapping effects of each load on the other. It also has the ability to superimpose different types of loading on the same ring section. It also provides an ideal solution for design of a circumferential ring stiffener to take these loads.

If reinforcing pads are used to beef up the shell locally, then the Bijlaard and WRC #107 techniques provide ideal solutions. These methods do not take into account closely spaced loads and their influence on one another. It assumes the local loading is isolated. This technique also provides a fast and accurate method of distinguishing between membrane and bending stresses for combining with other principal stresses.

For local loads where a partial ring stiffener is to be used to reduce local stresses, the beam on elastic foundation method provides an ideal method for sizing the partial rings or stiffener plates. The stresses in the shell must then be analyzed by another local load procedure. Shell stresses can be checked by the beam-on-elastic-foundation method for continuous radial loads about the entire circumference of a vessel shell or ring.

Procedure 5-3 has been included as a technique for converting various shapes of attachments to those which can more readily be utilized in these design procedures. Both the shape of an attachment and whether it is of solid or hollow cross section will have a distinct effect on the distribution of stresses, location of maximum stresses, and stress concentrations.

There are various methods for reducing stresses at local loadings. As shown in the foregoing paragraphs, these will have some bearing on how the loads are analyzed or how

stiffening rings or reinforcing plates are sized. The following methods apply to reducing shell stresses locally.

1. Increase the size of the attachment.
2. Increase the number of attachments.
3. Change the shape of the attachment to further distribute stresses.
4. Add reinforcing pads. Reinforcing pads should not be thinner than 0.75 times nor thicker than 1.5 times the thickness of the shell to which they are attached. They should not exceed 1.5 times the length of the attachment and should be continuously welded. Shell stresses must be investigated at the edge of the attachment to the pad as well as at the edge of the pad.
5. Increase shell thickness locally or as an entire shell course.
6. Add partial ring stiffeners.
7. Add full ring stiffeners.

The local stresses as outlined herein do not apply to local stresses due to any condition of internal restraint such as thermal or discontinuity stresses. Local stresses as defined by this section are due to external mechanical loads. The mechanical loading may be the external loads caused by the thermal growth of the attached piping, but this is not a thermal stress! For an outline of external local loads, see "Categories of Loadings" in Chapter 1.

PROCEDURE 5-1

STRESSES IN CIRCULAR RINGS [1–6]

Notation

R_m = mean radius of shell, in.
R_1 = distance to centroid of ring-shell, in.
M = internal moment in shell, in.-lb
M_c = external circumferential moment, in.-lb
M_h = external longitudinal moment (at clip or attachment only), in.-lb
M_L = general longitudinal moment on vessel, in.-lb
F_T = tangential load, lb
F_1, F_2 = loads on attachment, lb
f_a, f_b = equivalent radial load on 1-in. length of shell, lb
f_1 = resultant radial load, lb
p_r = radial load, lb
P = internal pressure, psi
P_e = external pressure, psi
T = internal tension/compression force, lb
K_m, K_T, K_r = internal moment coefficients
C_m, C_T, C_r = internal tension/compression coefficients
S_{1-8} = shell stresses, psi
Z = section modulus, in.^{3}
t = shell thickness, in.
σ_x = longitudinal stress, psi
σ_ϕ = circumferential stress, psi
e = length of shell which acts with attachment, in.
θ = angular distance between loads or from point of consideration, degrees
W = total weight of vessel above plane under consideration, lb

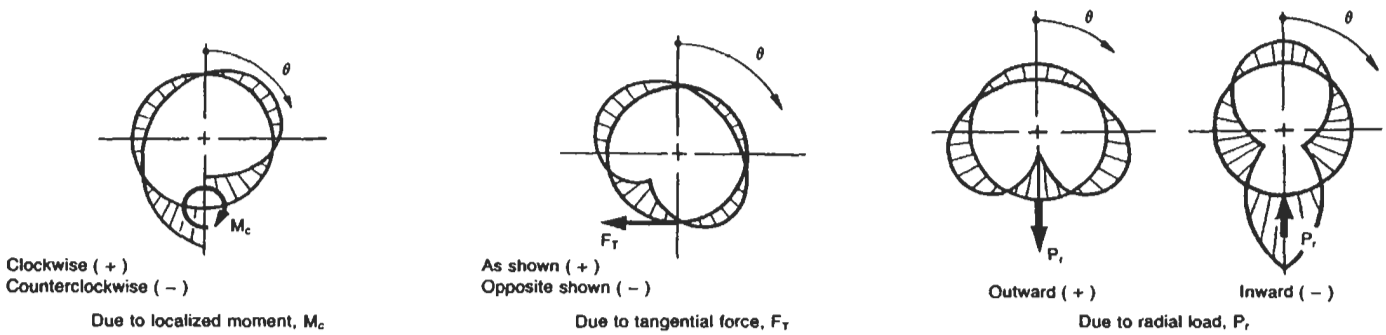

Figure 5-1. Moment diagrams for various ring loadings.

A = ASME external pressure factor

A_s = metal cross-sectional area of shell, in.^{2}

A_r = cross-sectional area of ring, in.^{2}

B = allowable longitudinal compression stress, psi

E = joint efficiency

E_1 = modulus of elasticity, psi

p = allowable circumferential buckling stress, lb/in.

I = moment of inertia, in.^{4}

S = code allowable stress, tension, psi

Table 5-1
Moments and Forces in Shell, M or T

Due to	Internal Moment, M	Tension/Compression Force, T
Circumferential moment, M_c	$M = \sum(K_m M_c)$	$T = \dfrac{\sum(C_m M_c)}{R_m}$
Tangential force, F_T	$M = \sum(K_T F_T) R_m$	$T = \sum(C_T F_T)$
Radial load, P_r	$M = \sum(K_r F_r) R_m$	$T = \sum(C_r F_r)$

Substitute R_1 for R_m if a ring is used. Values of K_m, K_T, K_r, C_m, C_T, and C_r are from Tables 5-4, 5-5, and 5-6.

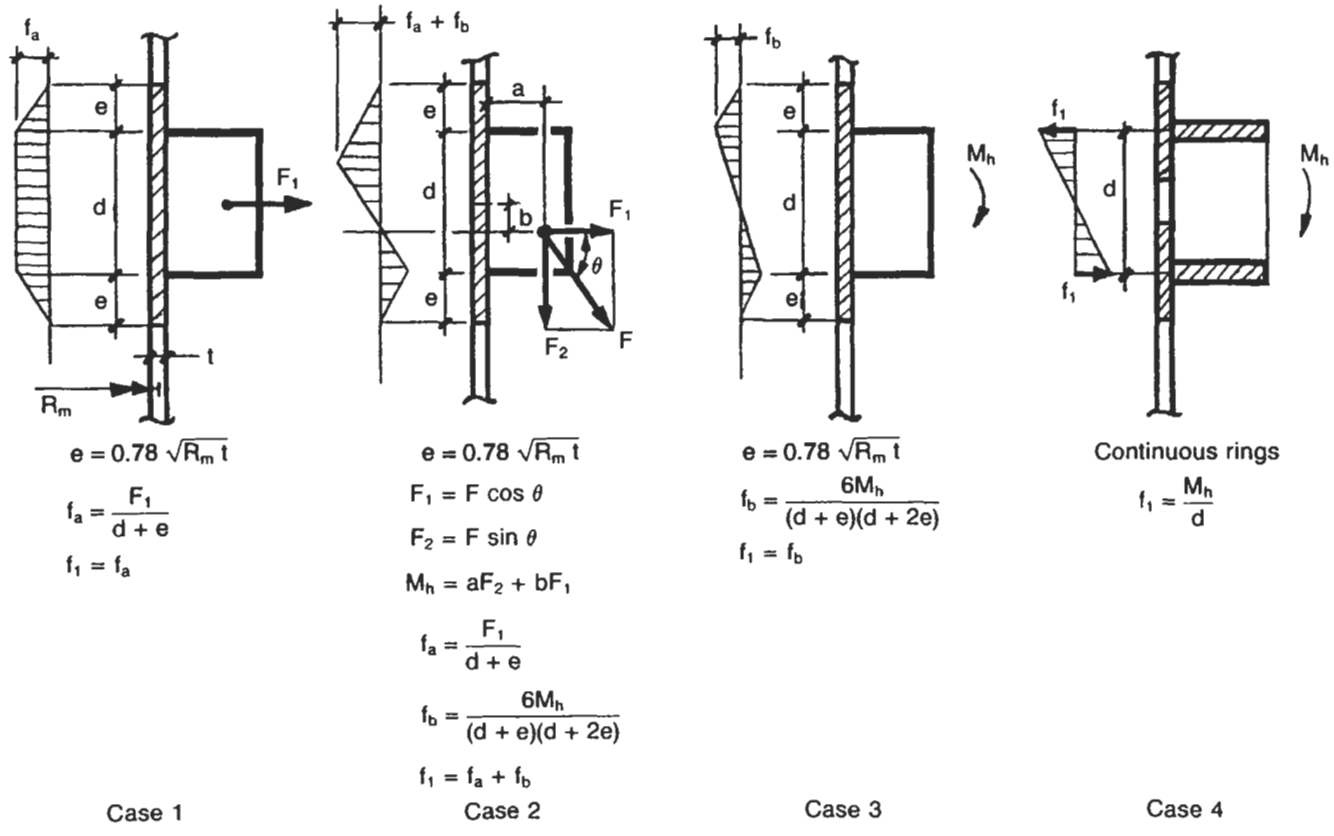

Figure 5-2. Determination of radial load, f_1, for various shell loadings.

Table 5-2
Shell Stresses Due to Various Loadings

Stress Due To	Stress Direction	Without Stiffener	With Stiffener
		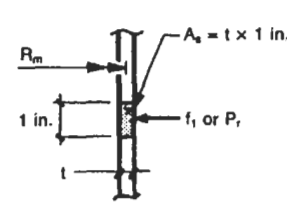	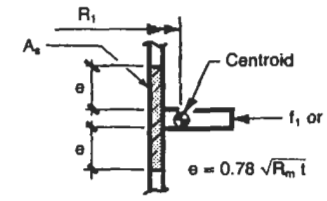
Internal pressure, P	σ_x	$S_1 = \frac{PR_m}{2t}$	$S_1 = \frac{PR_m}{2t}$
	σ_ϕ	$S_2 = \frac{PR_m}{t}$	$S_2 = \frac{PR_m}{t}\left(\frac{A_s}{A_s + A_r}\right)$
Tension/compression force, T	σ_ϕ	$S_3 = \frac{T}{A_s}$ (+)tension (−)compression	$S_3 = \frac{T}{A_s + A_r}$ (+)tension (−)compression
Local bending moment, M	σ_ϕ	$S_4 = \frac{6M}{t^2}$ M can be (+) or (−)	$S_4 = \frac{M}{Z}$ M can be (+) or (−)
External pressure, P_e	σ_x	$S_5 = (-)\frac{P_e R_m}{2t}$	$S_5 = (-)\frac{P_e R_m}{2t}$
	σ_ϕ	$S_6 = (-)\frac{P_e R_m}{t}$	$S_6 = (-)\frac{2P_e R_m e}{A_s + A_r}$
Longitudinal moment, M_L	σ_x	$S_7 = \pm\frac{M_L}{\pi R_m^2 t}$	$S_7 = \pm\frac{M_L}{\pi R_m^2 t}$
Dead load, W	σ_x	$S_8 = (-)\frac{W}{2\pi R_m t}$	$S_8 = (-)\frac{W}{2\pi R_m t}$

Table 5-3
Combined Stresses

Type	Tension	Compression
Longitudinal, σ_x	$\sigma_x = S_1 + S_7 - S_8$	$\sigma_x = (-)S_5 - S_7 - S_8$
Circumferential, σ_ϕ	$\sigma_\phi = S_2 + S_3 + S_4$	$\sigma_\phi = (-)S_3 - S_6 - S_4$

Allowable Stresses

Longitudinal tension: < 1.5SE =
Longitudinal compression: Factor "B" =
Circumferential compression: $< 0.5F_y$ =
Circumferential buckling: p - lb/in.

$$p = \frac{3E_1 I}{4R^3}$$

(Assumes 4:1 safety factor)

Circumferential tension: < 1.5SE=
Factor "B"

$\frac{D_o}{t}$ = = 0.05 min

$\frac{L}{D_o}$ = = 50 max

Enter Section II, Part D, Subpart 3, Fig. G, ASME Code
A= =0.1 max
Enter applicable material chart in ASME Code, Section II:

B = psi

For values of A falling to left of material line:

$$B = \frac{AE_1}{2}$$

Procedure

External localized loads (radial, moment, or tangential) produce internal bending moments, tension, and compression in ring sections. The magnitude of these moments and forces can be determined by this procedure, which consists essentially of the following steps:

1. Find moment or tension coefficients based on angular distances between applied loads, at each load from Tables 5-4, 5-5, and 5-6.
2. Superimpose the effects of various loadings by adding the product of coefficients times loads about any given point.

EXAMPLE

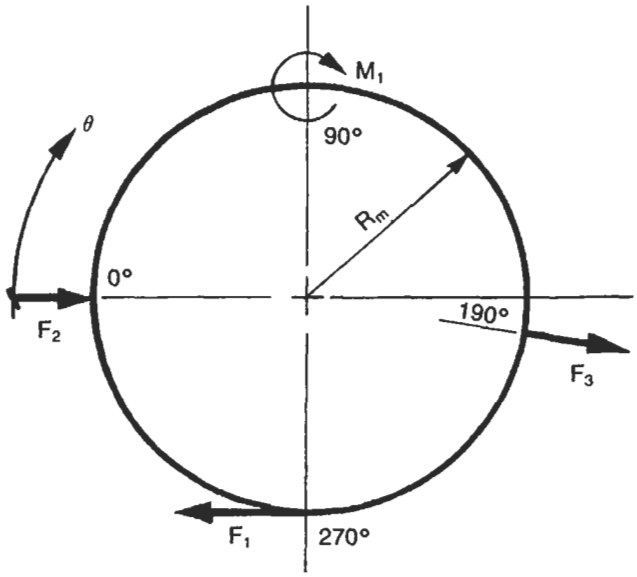

Figure 5-3. Sample ring section with various loadings.

GIVEN
$F_1 = (+)$ 1000 lb (would produce clockwise moment)
$F_2 = (-)$ 1500 lb (inward radial load)
$F_3 = (+)$ 500 lb (outward radial load)
$M_1 = (+)$ 800 in.-lb (would produce clockwise moment)
$R_m = 30$ in.
$t = 1$ in.
$A_s = 1$ in. $\times\ t = 1 \times 1 = 1$ in.^{2}
Since F_2 is the largest load assume the maximum moment will occur there.

Load	θ	**Coefficient × Load (÷ Radius)**	**T**
F_2	0°	$C_rF_2 = +0.2387\ (-1{,}500) =$	− 358.1
M_1	90°	$C_mM_1/R_m = -0.3183\ (+800)/30 =$	− 8.5
F_3	190°	$C_rF_3 = -0.2303\ (+500) =$	− 115.2
F_1	270°	$C_TF_1 = 0.0796\ (-1{,}000) =$	− 79.6
		T =	− 561.4 lb

$$\sigma_\phi = \frac{T}{A_s} = \frac{-561.4}{1} = -561 \text{ psi (compression)}$$

Load	θ	**Coefficient × Load (× Radius)**	**M**
F_2	0°	$K_rF_2R_m = -0.2387\ (-1500)\ 30 =$	+ 10,742
M_1	90°	$K_mM_1 = -0.0683\ (+800) =$	− 55
F_3	190°	$K_rF_3R_m = -0.0760\ (+500)\ 30 =$	− 1140
F_1	270°	$K_TF_1R_m = -0.0113\ (+1000)\ 30 =$	− 339
		M =	+ 9208 in.-lb

$$\sigma_\phi = \frac{6M}{t^2} = \frac{6(+9208)}{1^2} = +55{,}248 \text{ psi}$$

No good!

$$Z = \frac{M}{S} = \frac{9208}{15000} = 0.614 \text{ in.}^3$$

Use this ring.

Table 5-4
Values of Coefficients

θ	Localized Moment, M_c		Tangential Force, F_T		θ	Localized Moment, M_c		Tangential Force, F_T	
	K_m	C_m	K_T	C_T		K_m	C_m	K_T	C_T
0	+0.5	0	0	−0.5	180°	0	0	0	0
5°	+0.4584	−0.0277	−0.0190	−0.4773	185°	+0.0139	+0.0277	−0.0069	−0.0208
10°	+0.4169	−0.0533	−0.0343	−0.4512	190°	+0.0275	+0.0553	−0.0137	−0.0442
15°	+0.3759	−0.0829	−0.0462	−0.4221	195°	+0.0407	+0.0824	−0.0201	−0.0608
20°	+0.3356	−0.1089	−0.0549	−0.3904	200°	+0.0533	+0.1089	−0.0261	−0.0794
25°	+0.2960	−0.1345	−0.0606	−0.3566	205°	+0.0651	+0.1345	−0.0345	−0.0966
30°	+0.2575	−0.1592	−0.0636	−0.3210	210°	+0.0758	+0.1592	−0.0361	−0.1120
35°	+0.2202	−0.1826	−0.0641	−0.2843	215°	+0.0854	+0.1826	−0.0399	−0.1253
40°	+0.1843	−0.2046	−0.0625	−0.2468	220°	+0.0935	+0.2046	−0.0428	−0.1363
45°	+0.1499	−0.2251	−0.0590	−0.2089	225°	+0.1001	+0.2251	−0.0446	−0.1447
50°	+0.1173	−0.2438	−0.0539	−0.1712	230°	+0.1050	+0.2438	−0.0453	−0.1502
55°	+0.0865	−0.2607	−0.0475	−0.1340	235°	+0.1080	+0.2607	−0.0449	−0.1528
60°	+0.0577	−0.2757	−0.0401	−0.0978	240°	+0.1090	+0.2757	−0.0433	−0.1522
65°	+0.0310	−0.2885	−0.0319	−0.0629	245°	+0.1080	+0.2885	−0.0405	−0.1484
70°	+0.0064	−0.2991	−0.0233	−0.0297	250°	+0.1047	+0.2991	−0.0366	−0.1413
75°	−0.0158	−0.3075	−0.0144	+0.0014	255°	+0.0991	+0.3075	−0.0347	−0.1308
80°	−0.0357	−0.3135	−0.0056	+0.0301	260°	+0.0913	+0.3135	−0.0257	−0.1170
85°	−0.0532	−0.3171	+0.0031	+0.0563	265°	+0.0810	+0.3171	−0.0189	−0.0999
90°	−0.0683	−0.3183	+0.0113	+0.0796	270°	+0.0683	+0.3183	−0.0113	−0.0796
95°	−0.0810	−0.3171	+0.0189	+0.0999	275°	+0.0532	+0.3171	−0.0031	−0.0563
100°	−0.0913	−0.3135	+0.0257	+0.1170	280°	+0.0357	+0.3135	+0.0056	−0.0301
105°	−0.0991	−0.3075	+0.0347	+0.1308	285°	+0.0158	+0.3075	+0.0144	−0.0014
110°	−0.1047	−0.2991	+0.0366	+0.1413	290°	−0.0064	+0.2991	+0.0233	+0.0297
115°	−0.1079	−0.2885	+0.0405	+0.1484	295°	−0.0310	+0.2885	+0.0319	+0.0629
120°	−0.1090	−0.2757	+0.0433	+0.1522	300°	−0.0577	+0.2757	+0.0401	+0.0978
125°	−0.1080	−0.2607	+0.0449	+0.1528	305°	−0.0865	+0.2607	+0.0475	+0.1340
130°	−0.1050	−0.2438	+0.0453	+0.1502	310°	−0.1173	+0.2438	+0.0539	+0.1712
135°	−0.1001	−0.2251	+0.0446	+0.1447	315°	−0.1499	+0.2251	+0.0590	+0.2089
140°	−0.0935	−0.2046	+0.0428	+0.1363	320°	−0.1843	+0.2046	+0.0625	+0.2468
145°	−0.0854	−0.1826	+0.0399	+0.1253	325°	−0.2202	+0.1826	+0.0641	+0.2843
150°	−0.0758	−0.1592	+0.0361	+0.1120	330°	−0.2575	+0.1592	+0.0636	+0.3210
155°	−0.0651	−0.1345	+0.0345	+0.0966	335°	−0.2960	+0.1345	+0.0606	+0.3566
160°	−0.0533	−0.1089	+0.0261	+0.0794	340°	−0.3356	+0.1089	+0.0549	+0.3904
165°	−0.0407	−0.0824	+0.0201	+0.0608	345°	−0.3759	+0.0829	+0.0462	+0.4221
170°	−0.0275	−0.0553	+0.0137	+0.0442	350°	−0.4169	+0.0533	+0.0343	+0.4512
175°	−0.0139	−0.0277	+0.0069	+0.0208	355°	−0.4584	+0.0277	+0.0190	+0.4773

Reprinted by permission R. I. Isakower, *Machine Design*, Mar. 4, 1965.

Table 5-5
Values of Coefficient K_r Due to Outward Radial Load, P_r

θ	K_r	θ	K_r	θ	K_r	θ	K_r
0–360°	−0.2387	46–314	+0.0533	92–268	+0.0883	138–222	−0.0212
1–359	−0.2340	47–313	+0.0567	93–267	+0.0868	139–221	−0.0237
2–358	−0.2217	48–312	+0.0601	94–266	+0.0851	140–220	−0.0268
3–357	−0.2132	49–311	+0.0632	95–265	+0.0830	141–219	−0.0284
4–356	−0.2047	50–310	+0.0663	96–264	+0.0817	142–218	−0.0307
5–355	−0.1961	51–309	+0.0692	97–263	+0.0798	143–217	−0.0330
6–354	−0.1880	52–308	+0.0720	98–262	+0.0780	144–216	−0.0353
7–353	−0.1798	53–307	+0.0747	99–261	+0.0760	145–215	−0.0382
8–352	−0.1717	54–306	+0.0773	100–260	+0.0736	146–214	−0.0396
9–351	−0.1637	55–305	+0.0796	101–259	+0.0719	147–213	−0.0418
10–350	−0.1555	56–304	+0.0819	102–258	+0.0698	148–212	−0.0438
11–349	−0.1480	57–303	+0.0841	103–257	+0.0677	149–211	−0.0459
12–348	−0.1402	58–302	+0.0861	104–256	+0.0655	150–210	−0.0486
13–347	−0.1326	59–301	+0.0880	105–255	+0.0627	151–209	−0.0498
14–346	−0.1251	60–300	+0.0897	106–254	+0.0609	152–208	−0.0517
15–345	−0.1174	61–299	+0.0914	107–253	+0.0586	153–207	−0.0535
16–344	−0.1103	62–298	+0.0940	108–252	+0.0562	154–206	−0.0553
17–343	−0.1031	63–297	+0.0944	109–251	+0.0538	155–205	−0.0577
18–342	−0.0960	64–296	+0.0957	110–250	+0.0508	156–204	−0.0586
19–341	−0.0890	65–295	+0.0967	111–249	+0.0489	157–203	−0.0602
20–340	−0.0819	66–294	+0.0979	112–248	+0.0464	158–202	−0.0617
21–339	−0.0754	67–293	+0.0988	113–247	+0.0439	159–201	−0.0633
22–338	−0.0687	68–292	+0.0997	114–246	+0.0431	160–200	−0.0654
23–337	−0.0622	69–291	+0.1004	115–245	+0.0381	161–199	−0.0660
24–336	−0.0558	70–290	+0.1008	116–244	+0.0361	162–198	−0.0673
25–335	−0.0493	71–289	+0.1014	117–243	+0.0335	163–197	−0.0686
26–334	−0.0433	72–288	+0.1018	118–242	+0.0309	164–196	−0.0697
27–333	−0.0373	73–287	+0.1019	119–241	+0.0283	165–195	−0.0715
28–332	−0.0314	74–286	+0.1020	120–240	+0.0250	166–194	−0.0719
29–331	−0.0256	75–285	+0.1020	121–239	+0.0230	167–193	−0.0728
30–330	−0.0197	76–284	+0.1020	122–238	+0.0203	168–192	−0.0737
31–329	−0.0144	77–283	+0.1019	123–237	+0.0176	169–191	−0.0746
32–328	−0.0089	78–282	+0.1017	124–236	+0.0145	170–190	−0.0760
33–327	−0.0037	79–281	+0.1013	125–235	+0.0116	171–189	−0.0764
34–326	+0.0015	80–280	+0.1006	126–234	+0.0090	172–188	−0.0768
35–325	+0.0067	81–279	+0.1003	127–233	+0.0070	173–187	−0.0772
36–324	+0.0115	82–278	+0.0997	128–232	+0.0044	174–186	−0.0776
37–323	+0.0162	83–277	+0.0989	129–231	+0.0017	175–185	−0.0787
38–322	+0.0209	84–276	+0.0981	130–230	−0.0016	176–184	−0.0789
39–321	+0.0254	85–275	+0.0968	131–229	−0.0035	177–183	−0.0791
40–320	+0.0299	86–274	+0.0961	132–228	−0.0061	178–182	−0.0793
41–319	+0.0340	87–273	+0.0950	133–227	−0.0087	179–181	−0.0795
42–318	+0.0381	88–272	+0.0938	134–226	−0.0113	180	−0.0796
43–317	+0.0421	89–271	+0.0926	135–225	−0.0145		
44–316	+0.0460	90–270	+0.0909	136–224	−0.0163		
45–315	+0.0497	91–269	+0.0898	137–223	−0.0188		

Table 5-6
Values of Coefficient C_r Due to Radial Load, P_r

θ	C_r	θ	C_r	θ	C_r	θ	C_r	θ	C_r	θ	C_r
0–360°	+0.2387	31–329	+0.4175	62–298	+0.4010	93–267	+0.2280	124–236	−0.0040	155–205	−0.1870
1–359	+0.2460	32–328	+0.4200	63–297	+0.3975	94–266	+0.2225	125–235	−0.0018	156–204	−0.1915
2–358	+0.2555	33–327	+0.4225	64–296	+0.3945	95–265	+0.2144	126–234	−0.0175	157–203	−0.1945
3–357	+0.2650	34–326	+0.4250	65–295	+0.3904	96–264	+0.2075	127–233	−0.0250	158–202	−0.1985
4–356	+0.2775	35–325	+0.4266	66–294	+0.3875	97–263	+0.2000	128–232	−0.0325	159–201	−0.2025
5–355	+0.2802	36–324	+0.4280	67–293	+0.3830	98–262	+0.1925	129–231	−0.0400	160–200	−0.2053
6–354	+0.2870	37–323	+0.4300	68–292	+0.3790	99–261	+0.1850	130–230	−0.0471	161–199	−0.2075
7–353	+0.2960	38–322	+0.4315	69–291	+0.3740	100–260	+0.1774	131–229	−0.0550	162–198	−0.2110
8–352	+0.3040	39–321	+0.4325	70–290	+0.3688	101–259	+0.1700	132–228	−0.0620	163–197	−0.2140
9–351	+0.3100	40–320	+0.4328	71–289	+0.3625	102–258	+0.1625	133–227	−0.0675	164–196	−0.2170
10–350	+0.3171	41–319	+0.4330	72–288	+0.3600	103–257	+0.1550	134–226	−0.0750	165–195	−0.2198
11–349	+0.3240	42–318	+0.4332	73–287	+0.3540	104–256	+0.1480	135–225	−0.0804	166–194	−0.2220
12–348	+0.3310	43–317	+0.4335	74–286	+0.3490	105–255	+0.1394	136–224	−0.0870	167–193	−0.2240
13–347	+0.3375	44–316	+0.4337	75–285	+0.3435	106–254	+0.1400	137–223	−0.0940	168–192	−0.2260
14–346	+0.3435	45–315	+0.4340	76–284	+0.3381	107–253	+0.1300	138–222	−0.1000	169–191	−0.2280
15–345	+0.3492	46–314	+0.4332	77–283	+0.3325	108–252	+0.1150	139–221	−0.1050	170–190	−0.2303
16–344	+0.3550	47–313	+0.4324	78–282	+0.3270	109–251	+0.1075	140–220	−0.1115	171–189	−0.2315
17–343	+0.3600	48–312	+0.4316	79–281	+0.3200	110–250	+0.1011	141–219	−0.1170	172–188	−0.2325
18–342	+0.3655	49–311	+0.4308	80–280	+0.3150	111–249	+0.0925	142–218	−0.1230	173–187	−0.2345
19–341	+0.3720	50–310	+0.4301	81–279	+0.3090	112–248	+0.0840	143–217	−0.1280	174–186	−0.2351
20–340	+0.3763	51–309	+0.4283	82–278	+0.3025	113–247	+0.0760	144–216	−0.1350	175–185	−0.2366
21–339	+0.3810	52–308	+0.4266	83–277	+0.2960	114–246	+0.0700	145–215	−0.1398	176–184	−0.2370
22–338	+0.3855	53–307	+0.4248	84–276	+0.2900	115–245	+0.0627	146–214	−0.1450	177–183	−0.2375
23–337	+0.3900	54–306	+0.4231	85–275	+0.2837	116–244	+0.0550	147–213	−0.1500	178–182	−0.2380
24–336	+0.3940	55–305	+0.4214	86–274	+0.2775	117–243	+0.0490	148–212	−0.1550	179–181	−0.2384
25–335	+0.3983	56–304	+0.4180	87–273	+0.2710	118–242	+0.0400	149–211	−0.1605	180	−0.2387
26–334	+0.4025	57–303	+0.4160	88–272	+0.2650	119–241	+0.0335	150–210	−0.1651		
27–333	+0.4060	58–302	+0.4130	89–271	+0.2560	120–240	+0.0250	151–209	−0.1690		
28–332	+0.4100	59–301	+0.4100	90–270	+0.2500	121–239	+0.0175	152–208	−0.1745		
29–331	+0.4125	60–300	+0.4080	91–269	+0.2430	122–238	+0.0105	153–207	−0.1780		
30–330	+0.4151	61–299	+0.4040	92–268	+0.2360	123–237	+0.0025	154–206	−0.1825		

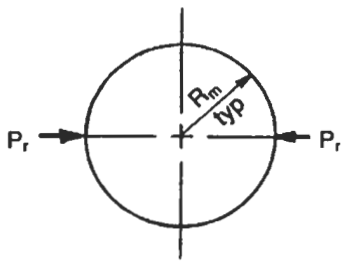

At loads	Between loads
K_r + 0.3183	K_r − 0.1817
C_r + 0	C_r − 0.5

Case 1

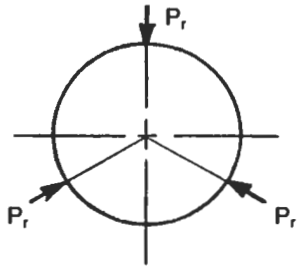

At loads	Between loads
K_r + 0.1888	K_r − 0.1
C_r − 0.2887	C_r − 0.5773

Case 2

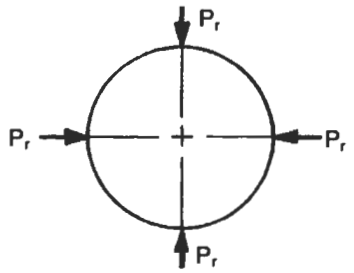

At loads	Between loads
K_r + 0.1366	K_r − 0.0705
C_r − 0.5	C_r − 0.707

Case 3

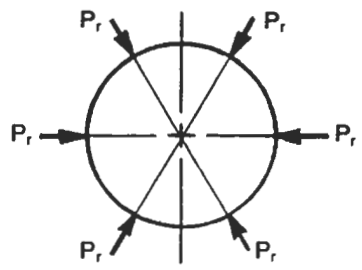

At loads	Between loads
K_r + 0.0889	K_r − 0.045
C_r − 0.866	C_r − 1.0

Case 4

For any number of equally spaced loads
ϕ = ½ angle between loads, radians

- *At loads:* $K_r = 0.5\left[\frac{1}{\phi} - \frac{\cos\phi}{\sin\phi}\right]$
- *Between loads:* $K_r = -0.5\left[\frac{1}{\sin\phi} - \frac{1}{\phi}\right]$
- *Tension force, T:* $T = \frac{P_r}{2}\left[\frac{1}{\sin\phi}\right]$

Case 5

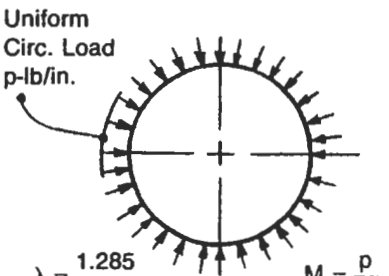

$\lambda = \frac{1.285}{\sqrt{R_m t}}$ $\quad M = \frac{p}{4\lambda}$

$\sigma_x = \frac{-3p}{2\lambda t^2}$ $\quad \sigma_\phi = \frac{-pR_m\lambda}{2t}$

Case 6

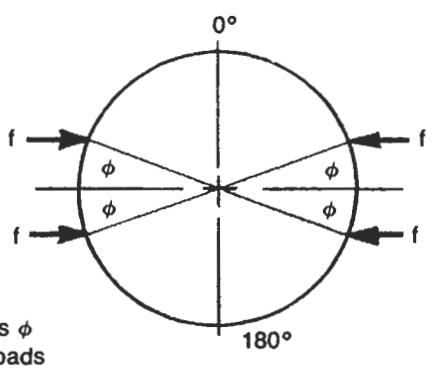

P_r = f cos ϕ
K_r is at loads
C_r is at loads

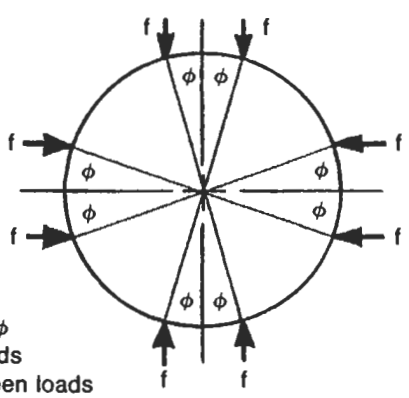

P_r = f cos ϕ
K_r is at loads
C_r is at loads

ϕ	K_r	C_r	ϕ	K_r	C_r
1°	0.6185	− 1.0	10°	0.4656	− 0.985
2°	0.6011	− 0.999	15°	0.3866	− 0.966
3°	0.5836	− 0.998	20°	0.3152	− 0.940
4°	0.5663	− 0.997	25°	0.2536	− 0.906
5°	0.5498	− 0.996	30°	0.2036	− 0.866
6°	0.5319	− 0.995	35°	0.1668	− 0.819
7°	0.5150	− 0.992	40°	0.1441	− 0.766
8°	0.4980	− 0.990	45°	0.1366	− 0.707
9°	0.4813	− 0.986			

Case 7

ϕ	K_r	C_r	ϕ	K_r	C_r
1°	0.2540	− 1.411	10°	0.1302	− 1.393
2°	0.2375	− 1.410	15°	0.0902	− 1.366
3°	0.2214	− 1.409	20°	0.0688	− 1.329
4°	0.2062	− 1.408	25°	0.0688	− 1.282
5°	0.1918	− 1.407	30°	0.0902	− 1.225
6°	0.1780	− 1.406	35°	0.1324	− 1.158
7°	0.1649	− 1.405	40°	0.1939	− 1.083
8°	0.1525	− 1.404	45°	0.2732	− 1.00
9°	0.1409	− 1.397			

Case 8

Figure 5-4. Values of coefficients K_r and C_r for various loadings.

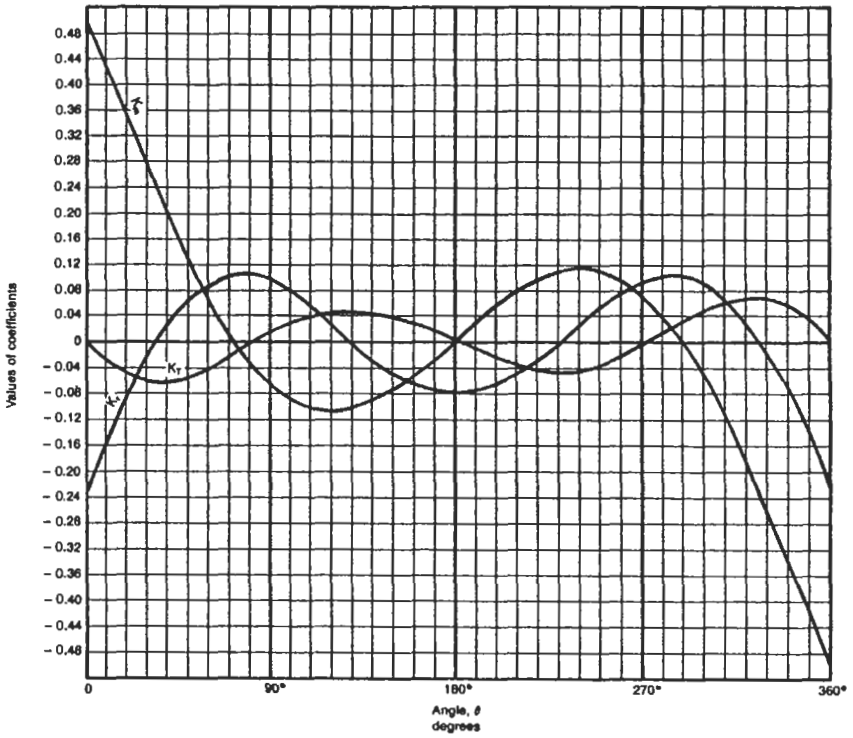

Figure 5-5. Graph of internal moment coefficients K_m, K_r, and K_T.

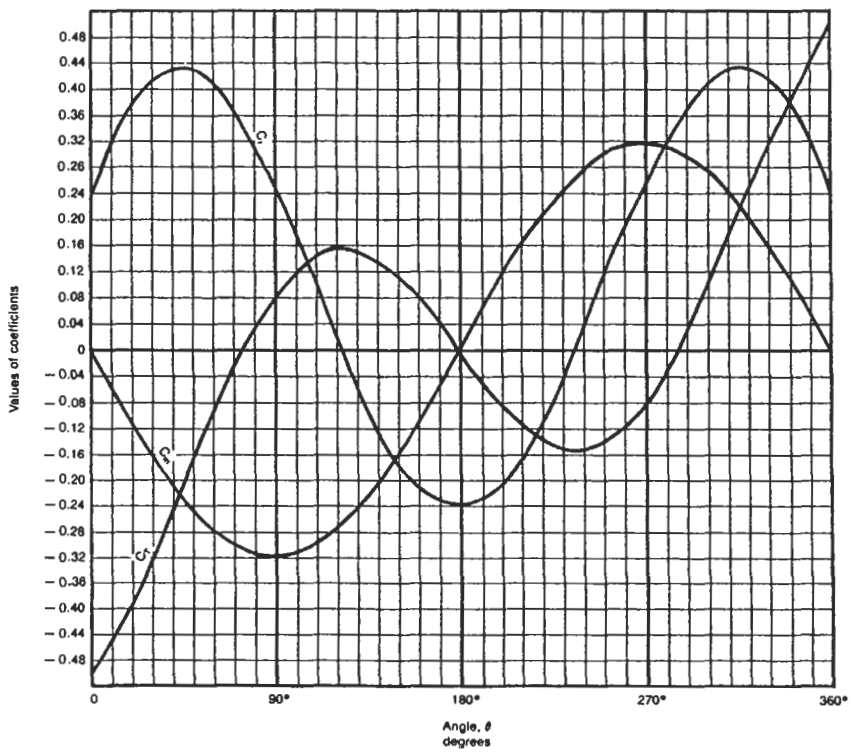

Figure 5-6. Graph of circumferential tension/compression coefficients C_m, C_r, and C_T.

Notes

1. *Sign convention*: It is mandatory that sign convention be strictly followed to determine both the magnitude of the internal forces and tension or compression at any point.
   a. Coefficients in Tables 5-4, 5-5, and 5-6 are for angular distance θ measured between the point on the ring under consideration and loads. Signs shown are for θ measured in the clockwise direction only.
   b. Signs of coefficients in Tables 5-4, 5-5, and 5-6 are for outward radial loads and clockwise tangential forces and moments. For loads and moments in the opposite direction either the sign of the load or the sign of the coefficient must be reversed.
2. In Table 5-7 the coefficients have already been combined for the loadings shown. The loads must be of equal magnitude and equally spaced. Signs of coefficients K_r and C_r are given for loads in the direction shown. Either the sign of the load or the sign of the coefficient may be reversed for loads in the opposite direction.
3. The maximum moment normally occurs at the point of the largest load; however, for unevenly spaced or mixed loadings, moments or tension should be investigated at each load, i.e., five loads require five analyses.
4. This procedure uses strain-energy concepts.
5. The following is assumed.
   a. Rings are of uniform cross section.
   b. Material is elastic, but is not stressed beyond elastic limit.
   c. Deformation is caused mainly by bending.
   d. All loads are in the same plane.
   e. The ring is not restrained and is supported along its circumference by a number of equidistant simple supports (therefore conservative for use on cylinders).
   f. The ring is of such large radius in comparison with its radial thickness that the deflection theory for straight beams is applicable.

PROCEDURE 5-2

DESIGN OF PARTIAL RING STIFFENERS [7]

Notation

M_L = longitudinal moment, in.-lb
M = internal bending moment, shell, in.-lb
F_b = allowable bending stress, psi
f_b = bending stress, psi
f or f_n = concentrated loads on stiffener due to radial or moment load on clip, lb
F_x = function or moment coefficient (see Table 5-7) $= e^{-\beta x}(\cos \beta x - \sin \beta x)$
E_v = modulus of elasticity of vessel shell at design temperature, psi
E_s = modulus of elasticity of stiffener at design temperature, psi
e = log base 2.71
I = moment of inertia of stiffener, $in.^4$
Z = section modulus of stiffener, $in.^3$
K = "spring constant" or "foundation modulus," $lb/in.^3$
x = distance between loads, in.
β = damping factor, dimensionless
P_r = radial load, lb

Table 5-7
Values of Function F_x

βx	F_x	βx	F_x
0	1.0	0.55	0.1903
0.05	0.9025	0.6	0.1431
0.1	0.8100	0.65	0.0997
0.15	0.7224	0.7	0.0599
0.2	0.6398	0.75	0.0237
0.25	0.5619	0.8	(−)0.0093
0.3	0.4888	0.85	(−)0.0390
0.35	0.4203	0.9	(−)0.0657
0.4	0.3564	0.95	(−)0.0896
0.45	0.2968	1.0	(−)0.1108
0.5	0.2415		

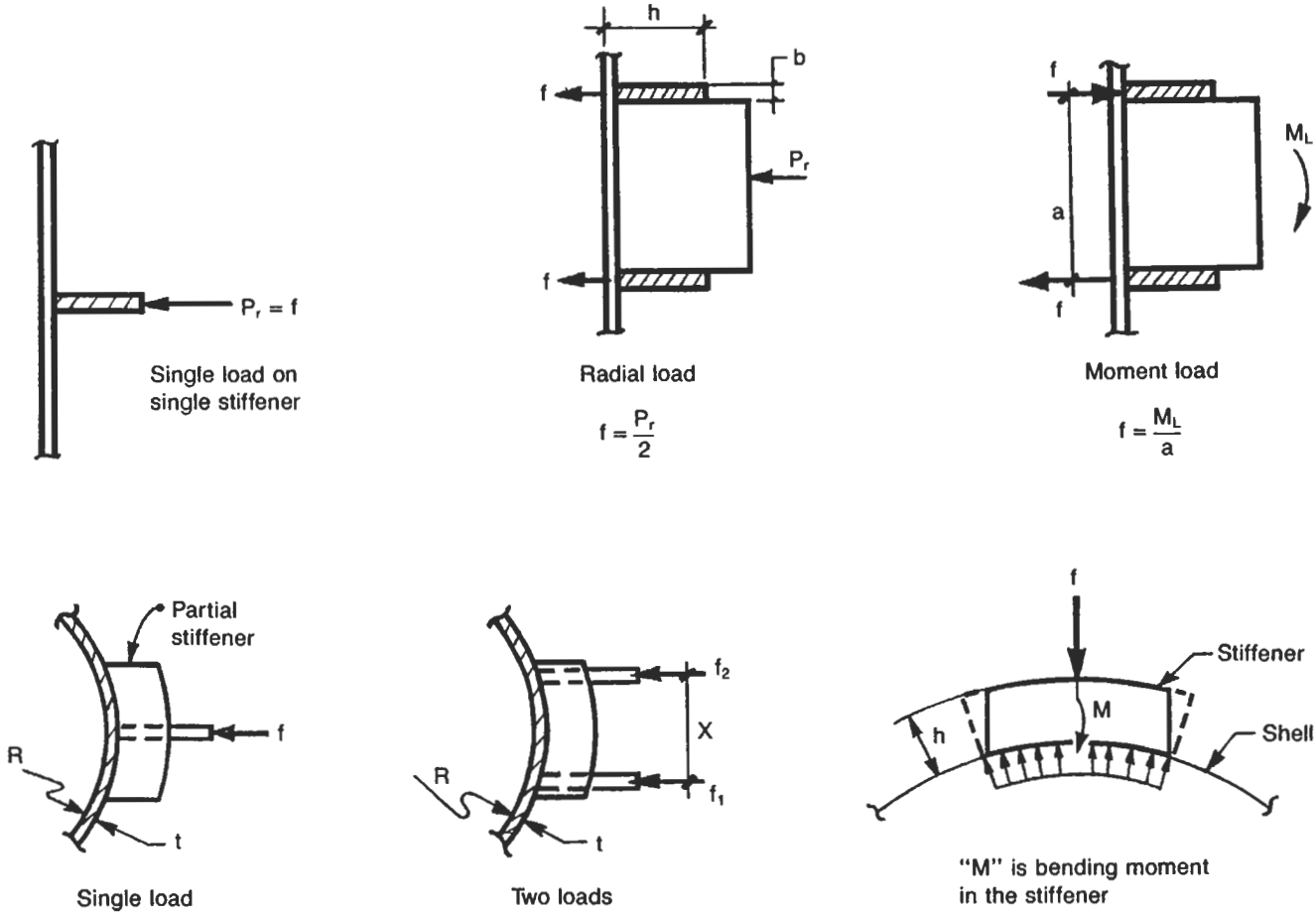

Figure 5-7. Dimensions, forces, and loadings for partial ring stiffeners.

Formulas

1. *Single load.* Determine concentrated load on each stiffener depending on whether there is a radial load or moment loading, single or double stiffener.

   f =

- *Calculate foundation modulus, K.*

$$K = \frac{E_v t}{R^2}$$

- *Assume stiffener size and calculate Z and I.*

  Proposed size: _____

$$I = \frac{bh^3}{12}$$

$$Z = \frac{bh^2}{6}$$

- *Calculate damping factor β based on proposed stiffener size.*

$$\beta = \sqrt[4]{\frac{K}{4E_s I}}$$

- *Calculate internal bending moment in stiffener, M.*

$$M = \frac{f}{4\beta}$$

- *Calculate bending stress, f_b.*

$$f_b = \frac{M}{Z}$$

If bending stress exceeds allowable ($F_b = 0.6F_y$), increase size of stiffener and recalculate I, Z, β, M, and f_b.

2. *Multiple loads.* Determine concentrated loads on stiffener(s). Loads must be of equal magnitude.

$f = f_1 = f_2 = \cdots = f_n$

- *Calculate foundation modulus, K.*

$$K = \frac{E_s t}{R^2}$$

- *Assume a stiffener size and calculate I and Z.*

Proposed size: _____

$$I = \frac{bh^3}{12}$$

$$Z = \frac{bh^2}{6}$$

- *Calculate damping factor β based on proposed stiffener size.*

$$\beta = \sqrt[4]{\frac{K}{4E_s I}}$$

- *Calculate internal bending moment in stiffener.*

Step 1: Determine βx for each load (βx is in radians).
Step 2: Determine F_x for each load from Table 5-7 or calculated as follows:

$$F_x = e^{-\beta x}(\cos \beta x - \sin \beta x)$$

Step 3: Calculate bending moment, M.

$\beta x_0 = 0$	$F_1 = 1$
$\beta x_1 =$ ——	$F_2 =$ ——
$\beta x_2 =$ ——	$F_3 =$ ——
$\beta x_n =$ ——	$F_n =$ ——
	$\Sigma F_x =$ ——

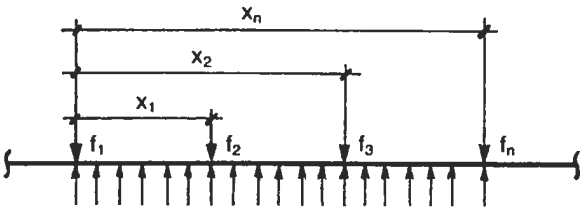

Figure 5-8. Dimensions and loading diagram for beam on elastic foundation analysis.

$$M = \frac{f}{4\beta}(\Sigma F_x)$$

- *Calculate bending stress, f_b.*

$$f_b = \frac{M}{Z}$$

Notes

1. This procedure is based on the beam-on-elastic-foundation theory. The elastic foundation is the vessel shell and the beam is the partial ring stiffener. The stiffener must be designed to be stiff enough to transmit the load(s) uniformly over its full length. The flexibility of the vessel shell is taken into account. The length of the vessel must be at least $4.9\sqrt{Rt}$ to qualify for the infinitely long beam theory.
2. The case of multiple loads uses the principle of superposition. That is, each successive load has an influence upon each of the other loads.
3. This procedure determines the bending stress in the stiffener only. The stresses in the vessel shell should be checked by an appropriate local load procedure. These local stresses are secondary bending stresses and should be combined with *primary* membrane and bending stresses.

PROCEDURE 5-3

ATTACHMENT PARAMETERS

This procedure is for use in converting the area of attachments into shapes that can readily be applied in design procedures. Irregular attachments (not round, square, or rectangular) can be converted into a rectangle which has:

- The same moment of inertia
- The same ratio of length to width of the original attachment

In addition, a rectangular load area may be reduced to an "equivalent" square area.

Bijlaard recommends, for non-rectangular attachments, the loaded rectangle can be assumed to be that which has the same moment of inertia with respect to the moment axis as the plan of the actual attachment. Further, it should be assumed that the dimensions of the rectangle in the longitudinal and circumferential directions have the same

ratio as the two dimensions of the attachment in these directions.

Dodge comments on this method in WRC Bulletin 198: "Although the 'equivalent moment of inertia procedure' is simple and direct, it was not derived by any mathematical or logical reasoning which would allow the designer to rationalize the accuracy of the results."

Dodge goes on to recommend an alternative procedure based on the principle of superposition. This method would divide irregular attachments into a composite of one or more rectangular sub-areas.

Neither method is entirely satisfactory and each ignores the effect of local stiffness provided by the attachment's shape. An empirical method should take into consideration the "area of influence" of the attachment which would account for the attenuation length or decay length of the stress in question.

Studies by Roark would indicate short zones of influence in the longitudinal direction (quick decay) and a much broader area of influence in the circumferential direction (slow decay, larger attenuation). This would also seem to

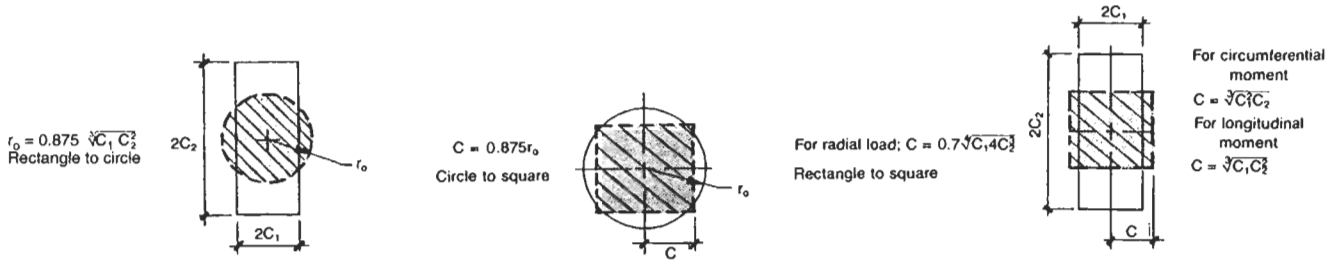

Figure 5-9. Attachment parameters for solid attachments.

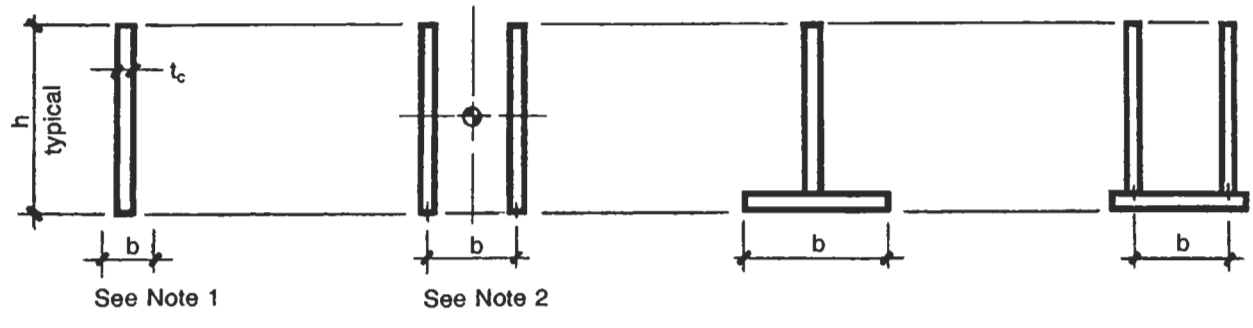

C_1	0.5b	0.3b	0.25b	0.3b
C_2	0.4h	0.4h	0.4h	0.4h

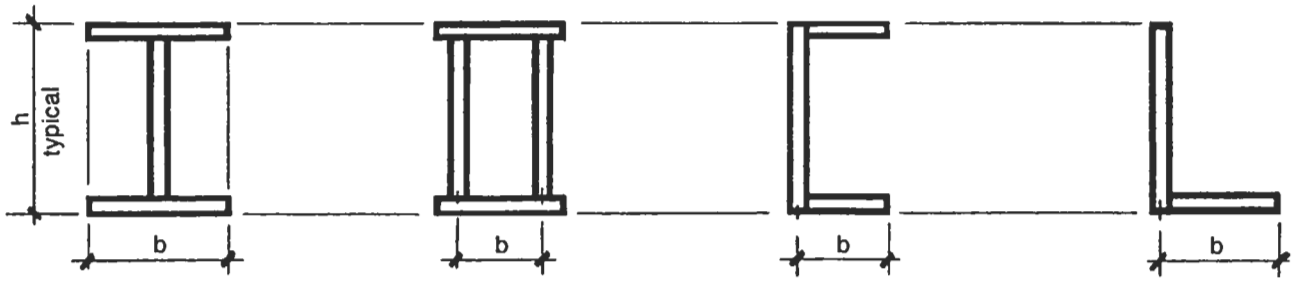

C_1	0.4b	0.5b	0.3b	0.2b
C_2	0.5h	0.5h	0.5h	0.4h

Figure 5-10. Attachment parameters for nonsolid attachments.

account for the attachment and shell acting as a unit, which they of course do.

Since no hard and fast rules have yet been determined, it would seem reasonable to apply the factors as outlined in this procedure for general applications. Very large or critical loads should, however, be examined in depth.

Notes

1. $b = t_c + 2t_w + 2t_s$ where t_w = fillet weld size and t_s = thickness of shell.
2. Clips must be closer than $\sqrt{Rt}$ if running circumferentially or closer than 6 in. if running longitudinally to be considered as a single attachment.

PROCEDURE 5-4

STRESSES IN CYLINDRICAL SHELLS FROM EXTERNAL LOCAL LOADS [7, 9, 10, 11]

Notation

P_r = radial load, lb
P = internal design pressure, psi
M_L = external longitudinal moment, in.-lb
M_c = external circumferential moment, in.-lb
M_T = external torsional moment, in.-lb
M_x = internal circumferential moment, in.-lb/in.
M_ϕ = internal longitudinal moment, in.-lb/in.
V_L = longitudinal shear force, lb
V_c = circumferential shear force, lb
R_m = mean radius of shell, in.
r_o = outside radius of circular attachment, in.
r = corner radius of attachment, in.
K_n, K_b = stress concentration factors
K_c, K_L, K_1, K_2 = coefficients to determine β for rectangular attachments
N_x = membrane force in shell, longitudinal, lb/in.
N_ϕ = membrane force in shell, circumferential, lb/in.
τ_T = torsional shear stress, psi
τ_s = direct shear stress, psi
σ_x = longitudinal normal stress, psi
σ_ϕ = circumferential normal stress, psi
C = one-half width of square attachment, in.
C_c, C_L = multiplication factors for rectangular attachments
C_1 = one-half circumferential width of a rectangular attachment, in.
C_2 = one-half longitudinal length of a rectangular attachment, in.
h = thickness of attachment, in.
d_n = outside diameter of circular attachment, in.
t_e = equivalent thickness of shell and re-pad, in.
t_p = thickness of reinforcing pad. in.
t = shell thickness, in.
$\gamma, \beta, \beta_1, \beta_2$ = ratios based on vessel and attachment geometry

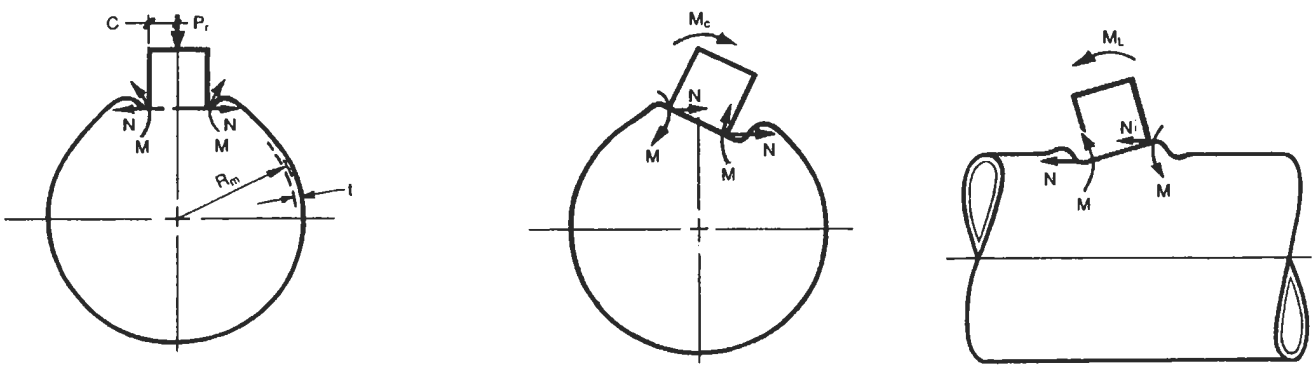

Radial load—membrane stress is compressive for inward radial load and tensile for outward load

Circumferential moment

Longitudinal moment

Figure 5-11. Loadings and forces at local attachments in cylindrical shells.

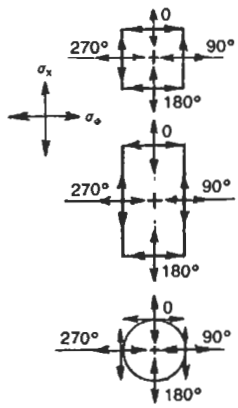

Figure 5-12. Stress indices of local attachments.

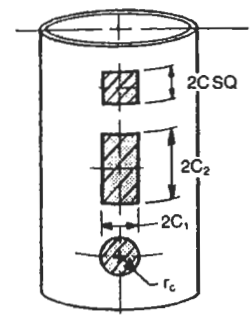

Figure 5-13. Load areas of local attachments. For circular attachments use $C = 0.875r_o$.

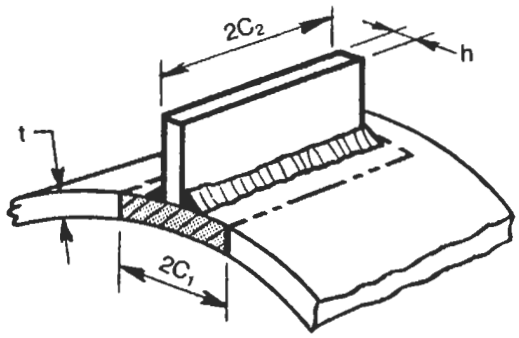

$2C_1 = h + 2w + 2t$
w = leg of fillet weld
h = thickness of attachment

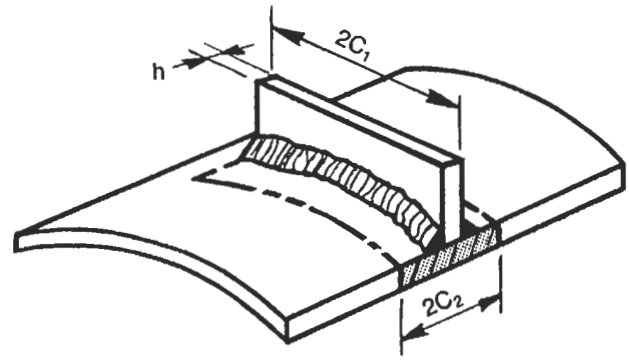

$2C_2 = h + 2w + 2t$
Note: Only ratios of C_1/C_2 between 0.25 and 4 may be computed by this procedure.

Figure 5-14. Dimensions for clips and attachments.

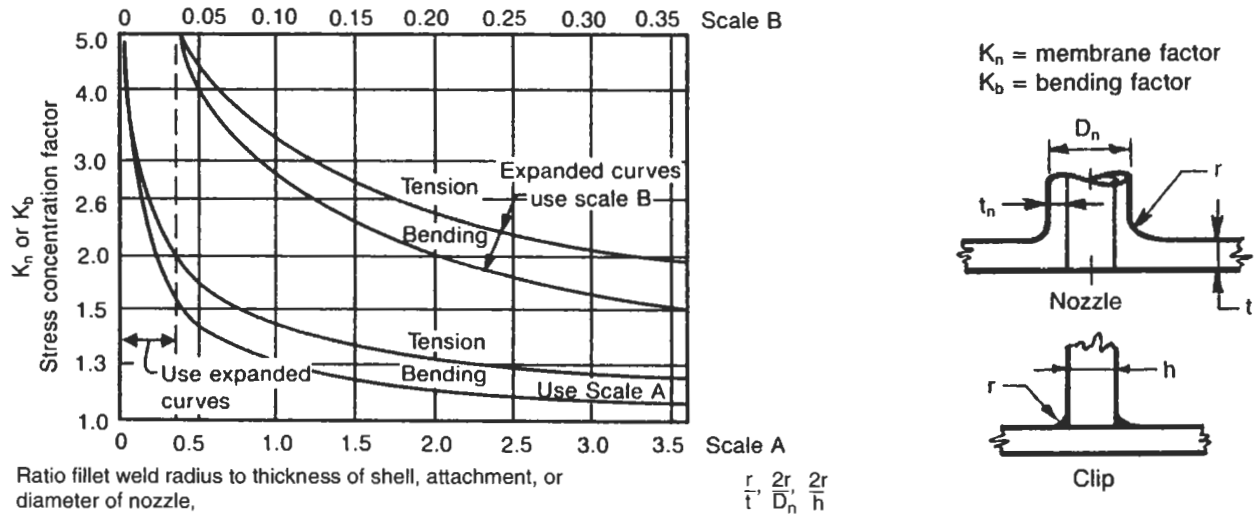

Figure 5-15. Stress concentration factors. (Reprinted by permission of the Welding Research Council.)

COMPUTING GEOMETRIC PARAMETERS FOR LOADS ON ATTACHMENTS WITH REINFORCING PADS

CIRCUMFERENTIAL MOMENT

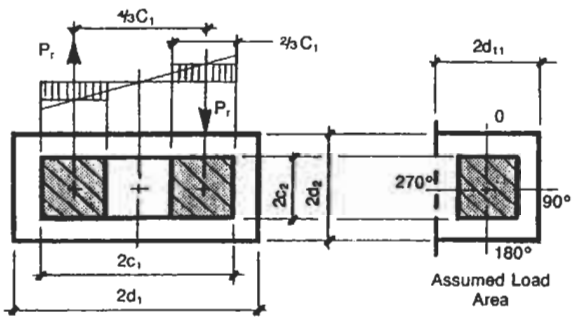

At Edge of Attachment		At Edge of Pad	
$R_m=\frac{I.D.+t+t_p}{2}$		$R_m=\frac{I.D.+t}{2}$	
$t_e=\sqrt{t^2+t_p^2}$		t	
$\gamma=\frac{R_m}{t_e}$		$\gamma=\frac{R_m}{t}$	
$C_1=\frac{2C_1}{6}$		$C_1=\frac{2d_{11}}{2}$	
$C_2=\frac{2C_2}{2}$		$C_2=\frac{2d_2}{2}$	
$\beta_1=\frac{C_1}{R_m}$		$\beta_1=\frac{C_1}{R_m}$	
$\beta_2=\frac{C_2}{R_m}$		$\beta_2=\frac{C_2}{R_m}$	
$\frac{\beta_1}{\beta_2}$		$\frac{\beta_1}{\beta_2}$	
β for N_ϕ		β for N_ϕ	
β for N_x		β for N_x	
β for M_ϕ		β for M_ϕ	
β for M_x		β for M_x	

LONGITUDINAL MOMENT

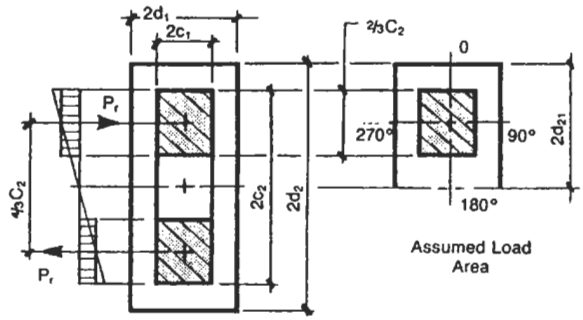

At Edge of Attachment		At Edge of Pad	
$R_m=\frac{I.D.+t+t_p}{2}$		$R_m=\frac{I.D.+t}{2}$	
$t_e=\sqrt{t^2+t_p^2}$		t	
$\gamma=\frac{R_m}{t_e}$		$\gamma=\frac{R_m}{t}$	
$C_1=\frac{2C_1}{2}$		$C_1=\frac{2d_1}{2}$	
$C_2=\frac{2C_2}{6}$		$C_2=\frac{2d_{21}}{2}$	
$\beta_1=\frac{C_1}{R_m}$		$\beta_1=\frac{C_1}{R_m}$	
$\beta_2=\frac{C_2}{R_m}$		$\beta_2=\frac{C_2}{R_m}$	
$\frac{\beta_1}{\beta_2}$		$\frac{\beta_1}{\beta_2}$	
β for N_ϕ		β for N_ϕ	
β for N_x		β for N_x	
β for M_ϕ		β for M_ϕ	
β for M_x		β for M_x	

Geometric Parameters

$$\gamma = \frac{R_m}{t}$$

$$\beta = \frac{C}{R_m}$$

or for circular attachments:

$$\frac{0.875 r_o}{R_m}$$

For rectangular attachments:

$$\beta_1 = \frac{C1}{R_m}$$

$$\beta_2 = \frac{C_2}{R_m}$$

Procedure

To calculate stresses due to radial load P_r, longitudinal moment M_L, and circumferential moment M_c, on a cylindrical vessel, follow the following steps:

Step 1: Calculate geometric parameters:

a. Round attachments:

$$\gamma = \frac{R_m}{t}$$

$$\beta = \frac{0.875 r_o}{R_m}$$

b. Square attachments:

$$\gamma = \frac{R_m}{t}$$

$$\beta = \frac{C}{R_m}$$

c. Rectangular attachment:

$$\gamma = \frac{R_m}{t}$$

β values for radial load, longitudinal moment, and circumferential moment vary based on ratios of β_1/β_2. Follow procedures that follow these steps to find β values.

Step 2: Using γ and β values; from Step 1, enter applicable graphs, Figures 5-17 through 5-22 to dimensionless membrane forces and bending moments in shell.

Step 3: Enter values obtained from Figures 5-17 through 5-22 into Table 5-11 and compute stresses.

Step 4: Enter stresses computed in Table 5-11 for various load conditions in Table 5-12. Combine stresses in accordance with sign convention of Table 5-12.

Computing β Values for Rectangular Attachments

$$\beta_1 = \frac{C_1}{R_m}$$

$$\beta_2 = \frac{C_2}{R_m}$$

$$\frac{\beta_1}{\beta_2}$$

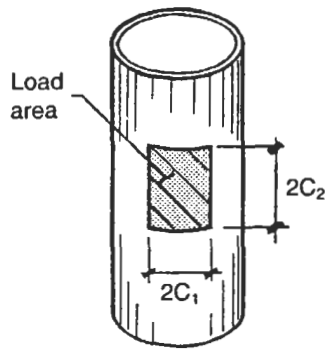

Figure 5-16. Dimensions of load areas.

β Values for Radial Load

From Table 5-8 select values of K_1 and K_2 and compute four β values as follows:

$$\text{If } \frac{\beta_1}{\beta_2} \geq 1, \quad \text{then } \beta = \left[1 - \frac{1}{3}\left(\frac{\beta_1}{\beta_2} - 1\right)(1 - K_1)\right]\sqrt{\beta_1 \beta_2}$$

$$\text{If } \frac{\beta_1}{\beta_2} < 1, \quad \text{then } \beta = \left[1 - \frac{4}{3}\left(1 - \frac{\beta_1}{\beta_2}\right)(1 - K_2)\right]\sqrt{\beta_1 \beta_2}$$

Table 5-8
β Values of Radial Loads

	K_1	K_2	β
N_ϕ	0.91	1.48	
N_x	1.68	1.2	
M_ϕ	1.76	0.88	
M_x	1.2	1.25	

Reprinted by permission of the Welding Research Council.

β Values for Longitudinal Moment

From Table 5-9 select values of C_L and K_L and compute values of β as follows:

For N_x and N_ϕ, $\beta = \sqrt[0.3]{\beta_1\beta_2^2}$

For M_ϕ, $\beta = K_L\sqrt[3]{\beta_1\beta_2^2}$

For M_x, $\beta = K_L\sqrt[3]{\beta_1\beta_2^2}$

	C_L	K_L	β
N_ϕ			
N_x			
M_ϕ			
M_x			

β Values for Circumferential Moment

From Table 5-10 select values of C_c and K_c and compute values of β as follows:

For N_x and N_ϕ, $\beta = \sqrt[3]{\beta_1^2\beta_2}$

For M_ϕ, $\beta = K_c\sqrt[3]{\beta_1^2\beta_2}$

For M_x, $\beta = K_c\sqrt[3]{\beta_1^2\beta_2}$

	C_c	K_c	β
N_ϕ			
N_x			
M_ϕ			
M_x			

Table 5-9
Coefficients for Longitudinal Moment, M_L

β_1/β_2	γ	C_L for N_ϕ	C_L for N_x	K_L for M_ϕ	K_L for M_x
	15	0.75	0.43	1.80	1.24
	50	0.77	0.33	1.65	1.16
0.25	100	0.80	0.24	1.59	1.11
	200	0.85	0.10	1.58	1.11
	300	0.90	0.07	1.56	1.11
	15	0.90	0.76	1.08	1.04
	50	0.93	0.73	1.07	1.03
0.5	100	0.97	0.68	1.06	1.02
	200	0.99	0.64	1.05	1.02
	300	1.10	0.60	1.05	1.02
	15	0.89	1.00	1.01	1.08
	50	0.89	0.96	1.00	1.07
1	100	0.89	0.92	0.98	1.05
	200	0.89	0.99	0.95	1.01
	300	0.95	1.05	0.92	0.96
	15	0.87	1.30	0.94	1.12
	50	0.84	1.23	0.92	1.10
2	100	0.81	1.15	0.89	1.07
	200	0.80	1.33	0.84	0.99
	300	0.80	1.50	0.79	0.91
	15	0.68	1.20	0.90	1.24
	50	0.61	1.13	0.86	1.19
4	100	0.51	1.03	0.81	1.12
	200	0.50	1.18	0.73	0.98
	300	0.50	1.33	0.64	0.83

Reprinted by permission of the Welding Research Council.

Table 5-10
Coefficients for Circumferential Moment, M_c

β_1/β_2	γ	C_c for N_ϕ	C_c for N_x	K_c for M_ϕ	K_c for M_x
0.25	15	0.31	0.49	1.31	1.84
	50	0.21	0.46	1.24	1.62
	100	0.15	0.44	1.16	1.45
	200	0.12	0.45	1.09	1.31
	300	0.09	0.46	1.02	1.17
0.5	15	0.64	0.75	1.09	1.36
	50	0.57	0.75	1.08	1.31
	100	0.51	0.76	1.04	1.26
	200	0.45	0.76	1.02	1.20
	300	0.39	0.77	0.99	1.13
1	15	1.17	1.08	1.15	1.17
	50	1.09	1.03	1.12	1.14
	100	0.97	0.94	1.07	1.10
	200	0.91	0.91	1.04	1.06
	300	0.85	0.89	0.99	1.02
2	15	1.70	1.30	1.20	0.97
	50	1.59	1.23	1.16	0.96
	100	1.43	1.12	1.10	0.95
	200	1.37	1.06	1.05	0.93
	300	1.30	1.00	1.00	0.90
4	15	1.75	1.31	1.47	1.08
	50	1.64	1.11	1.43	1.07
	100	1.49	0.81	1.38	1.06
	200	1.42	0.78	1.33	1.02
	300	1.36	0.74	1.27	0.98

Reprinted by permission of the Welding Research Council.

Shear Stresses

- *Stress due to shear loads, V_L or V_C.*

  Round attachments:

$$\tau_s = \frac{V_L}{\pi r_o t}$$

$$\tau_s = \frac{V_C}{\pi r_o t}$$

  Square attachments:

$$\tau_s = \frac{V_L}{4Ct}$$

$$\tau_s = \frac{V_C}{4Ct}$$

  Rectangular attachments:

$$\tau_s = \frac{V_L}{4C_1 t}$$

$$\tau_s = \frac{V_C}{4C_2 t}$$

- *Stress due to torsional moment, M_T.*

  Round attachments only!

$$\tau_T = \frac{M_T}{2\pi r_o^2 t}$$

Table 5-11
Computing Stresses

	Figure	β	Value from Figure	Forces and Moments	Stress
Radial Load					
Membrane	5-22A		$\frac{N_\phi R_m}{P_r} = (\ )$	$N_\phi = \frac{(\ )P_r}{R_m}$	$\sigma_\phi = \frac{K_n N_\phi}{t}$
	5-22B		$\frac{N_x R_m}{P_r} = (\ )$	$N_x = \frac{(\ )P_r}{R_m}$	$\sigma_x = \frac{K_n N_x}{t}$
Bending	5-23A		$\frac{M_\phi}{P_r} = (\ )$	$M_\phi = (\ )P_r$	$\sigma_\phi = \frac{6K_b M_\phi}{t^2}$
	5-23B		$\frac{M_x}{P_r} = (\ )$	$M_x = (\ )P_r$	$\sigma_x = \frac{6K_b M_x}{t^2}$
Longitudinal Moment					
Membrane	5-24A		$\frac{N_\phi R_m^2 \beta}{M_L} = (\ )$	$N_\phi = \frac{(\ )C_L M_L}{R_m^2 \beta}$	$\sigma_\phi = \frac{K_n N_\phi}{t}$
	5-24B		$\frac{N_x R_m^2 \beta}{M_L} = (\ )$	$N_x = \frac{(\ )C_L M_L}{R_m^2 \beta}$	$\sigma_x = \frac{K_n N_x}{t}$
Bending	5-25A		$\frac{M_\phi R_m \beta}{M_L} = (\ )$	$M_\phi = \frac{(\ )M_L}{R_m \beta}$	$\sigma_\phi = \frac{6K_b M_\phi}{t^2}$
	5-25B		$\frac{M_x R_m \beta}{M_L} = (\ )$	$M_x = \frac{(\ )M_L}{R_m \beta}$	$\sigma_x = \frac{6K_b M_x}{t^2}$
Circumferential Moment					
Membrane	5-26A		$\frac{N_\phi R_m^2 \beta}{M_c} = (\ )$	$N_\phi = \frac{(\ )C_c M_c}{R_m^2 \beta}$	$\sigma_\phi = \frac{K_n N_\phi}{t}$
	5-26B		$\frac{N_X R_m^2 \beta}{M_C} = (\ )$	$N_x = \frac{(\ )C_c M_c}{R_m^2 \beta}$	$\sigma_x = \frac{K_n N_x}{t}$
Bending	5-27A		$\frac{M_\phi R_m \beta}{M_c} = (\ )$	$M_\phi = \frac{(\ )M_c}{R_m \beta}$	$\sigma_\phi = \frac{6K_b M_\phi}{t^2}$
	5-27B		$\frac{M_x R_m \beta}{M_c} = (\ )$	$M_x = \frac{(\ )M_c}{R_m \beta}$	$\sigma_x = \frac{6K_b M_x}{t^2}$

Table 5-12
Combining Stresses

Stress Due To			σ_x				σ_ϕ			
			0°	90°	180°	270°	0°	90°	180°	270°
Radial load, P_r (Sign is (+) for outward load, (−) for inward load)	Membrane	N_ϕ								
		N_x								
	Bending	M_ϕ								
		M_x								
Longitudinal moment, M_L	Membrane	N_ϕ					+		−	
		N_x	+		−					
	Bending	M_ϕ					+		−	
		M_x	+		−					
Circumferential moment, M_c	Membrane	N_ϕ						+		−
		N_x		+		−				
	Bending	M_ϕ						+		−
		M_x		+		−				
Internal pressure, P	$\sigma_\phi = \frac{PR_m}{t} =$						+	+	+	+
	$\sigma_x = \frac{PR_m}{2t} =$		+	+	+	+				
Total, $\sum$										

Note: Only absolute value of quantities are used. Combine stresses utilizing sign convention of table.

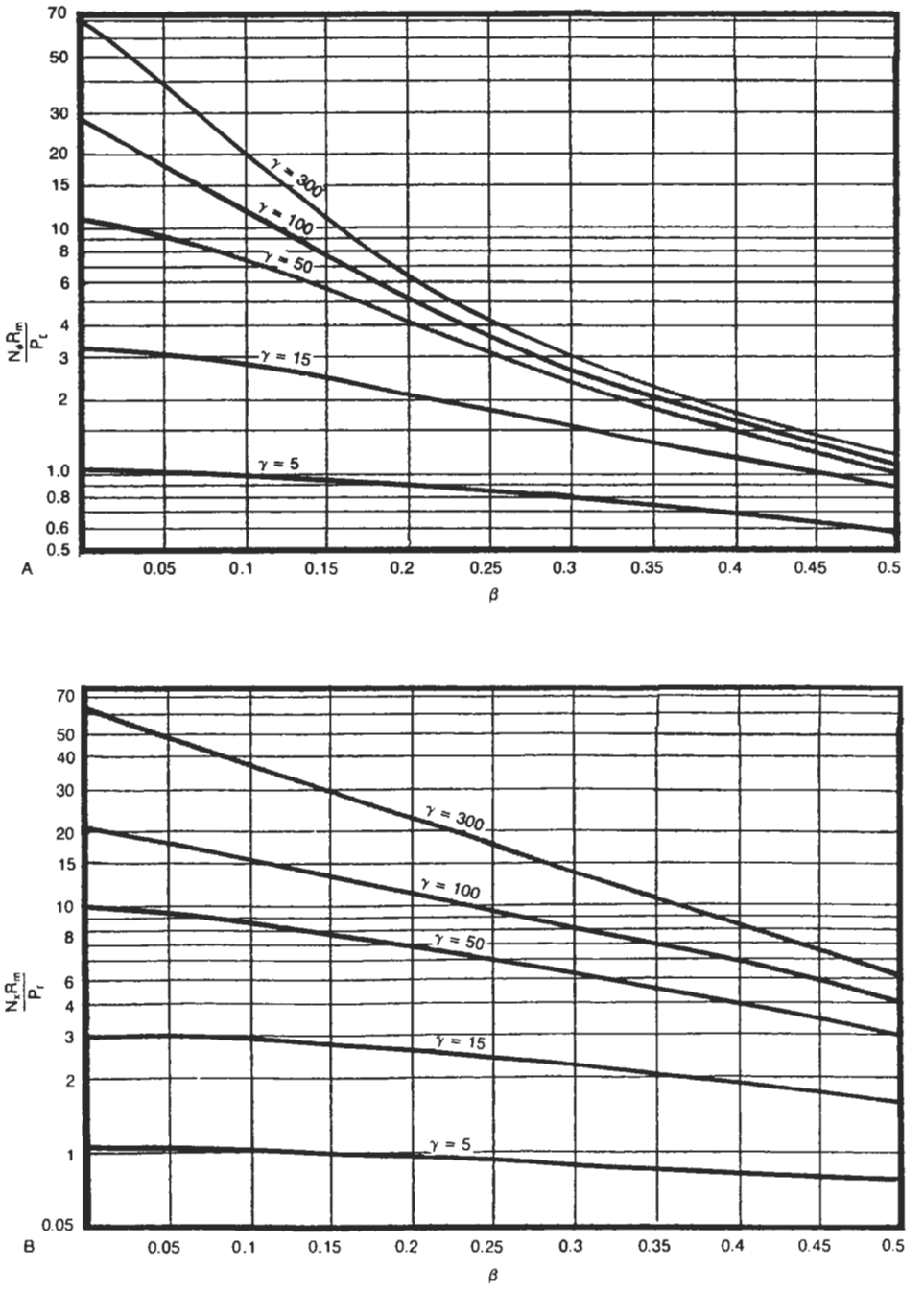

Figure 5-17. Membrane force in a cylinder due to radial load on an external attachment. (Reprinted by permission from the Welding Research Council.)

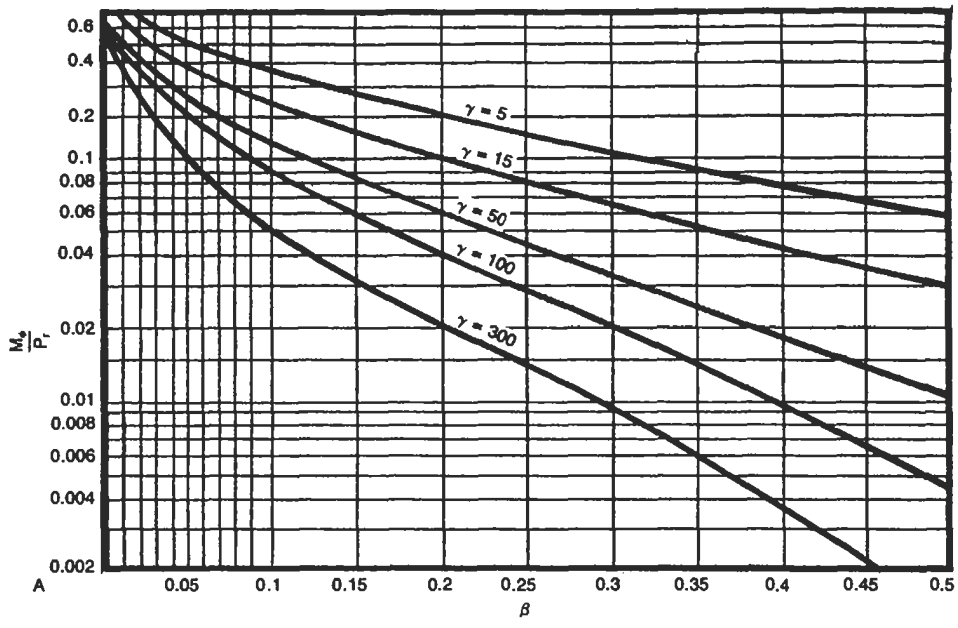

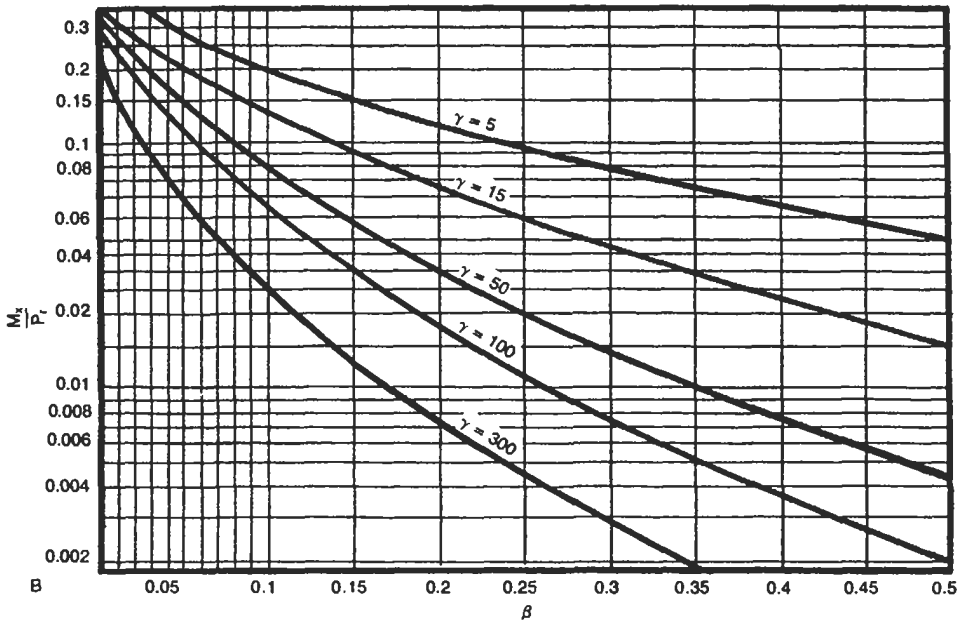

Figure 5-18. Bending moment in a cylinder due to radial load on an external attachment. (Reprinted by permission from the Welding Research Council.)

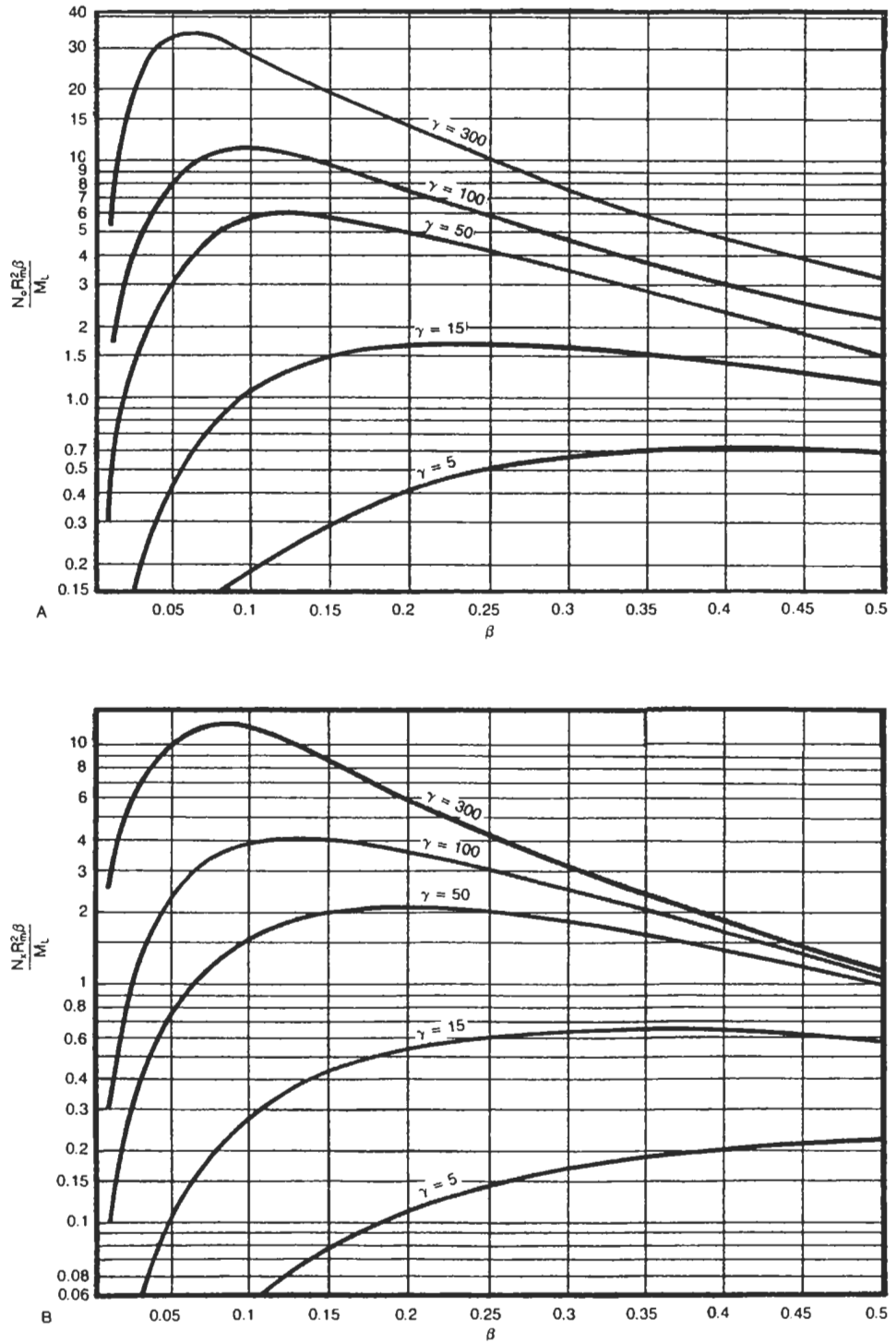

Figure 5-19. Membrane force in a cylinder due to longitudinal moment on an external attachment. (Reprinted by permission from the Welding Research Council.)

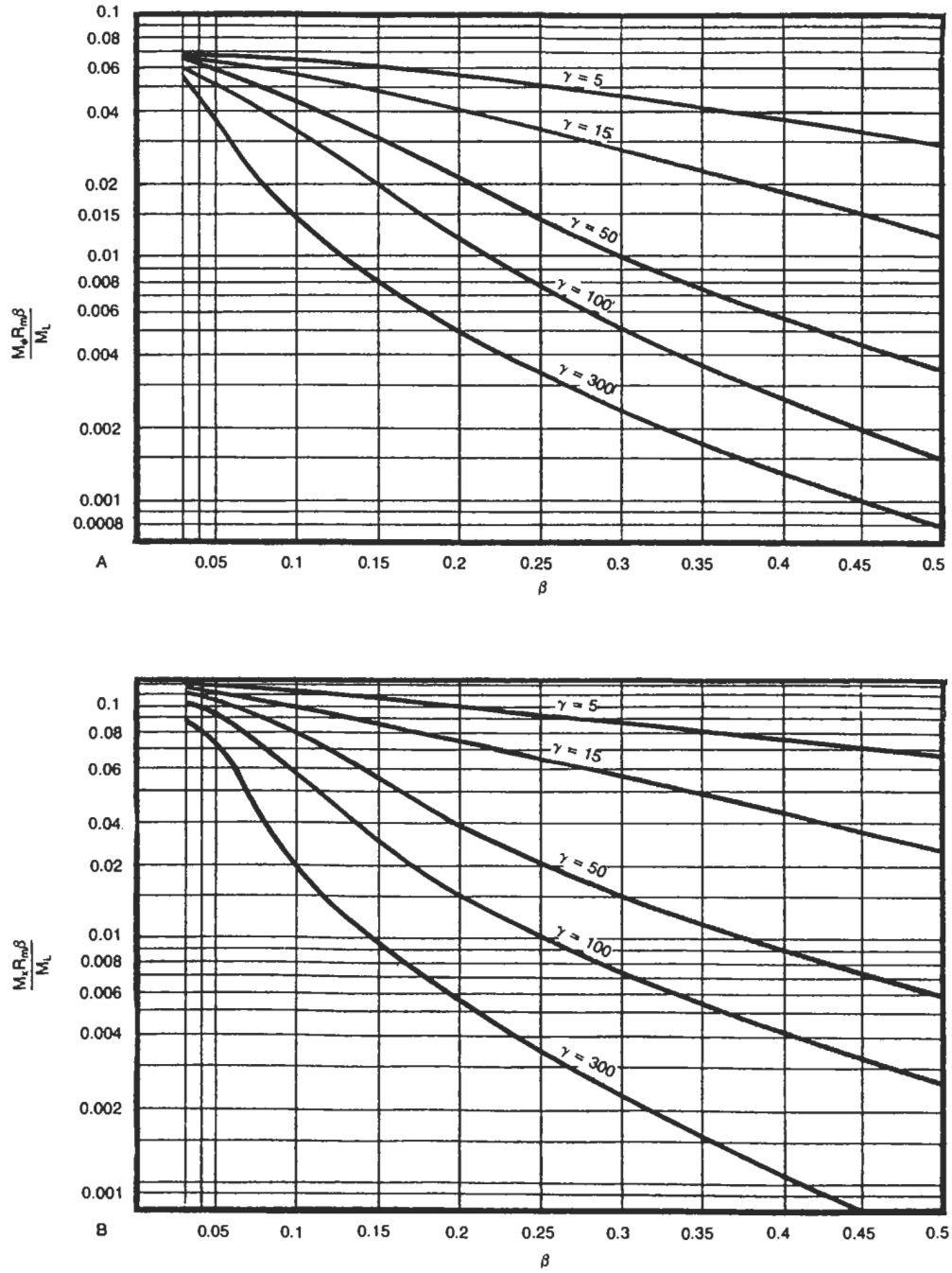

Figure 5-20. Bending moment in a cylinder due to longitudinal moment on an external attachment. (Reprinted by permission from the Welding Research Council.)

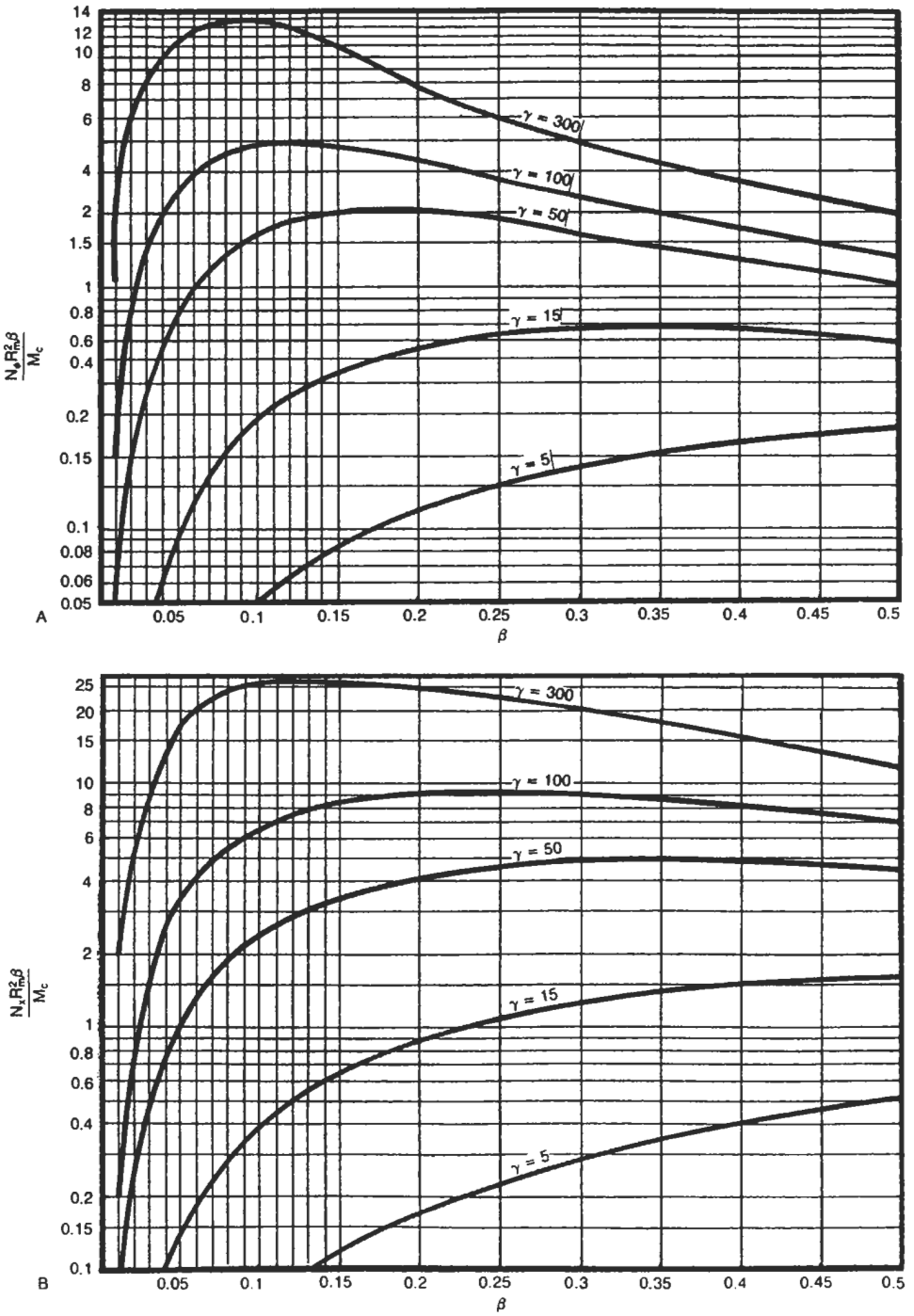

Figure 5-21. Membrane force in a cylinder due to circumferential moment on an external attachment. (Reprinted by permission from the Welding Research Council.)

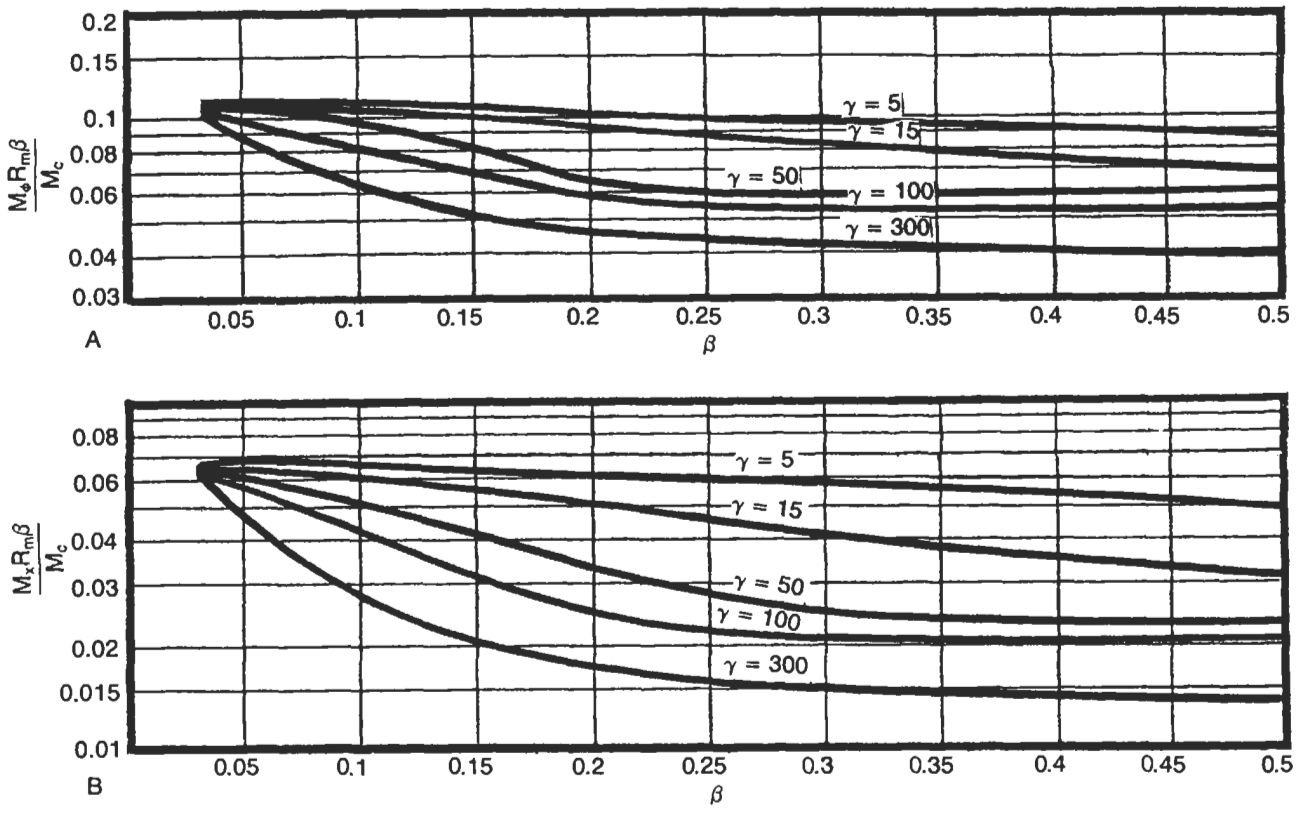

Figure 5-22. Bending moment in a cylinder due to circumferential moment on an external attachment. (Reprinted by permission from the Welding Research Council.)

Notes

1. Figure 5-15 should be used if the vessel is in brittle (low temperature) or fatigue service. For brittle fracture the maximum tensile stress is governing. The stress concentration factor is applied to the stresses which are perpendicular to the change in section.
2. Subscripts θ and C indicate circumferential direction, X and L indicate longitudinal direction.
3. Only rectangular shapes where c_1/c_2 is between $\frac{1}{4}$ and 4 can be computed by this procedure. The charts and graphs are not valid for lesser or greater ratios.
4. Methods of reducing stresses from local loads:
   a. Add reinforcing pad.
   b. Increase shell thickness.
   c. Add partial ring stiffener.
   d. Add circumferential ring stiffener(s).
   e. Kneebrace to reduce moment loads.
   f. Increase attachment size.
5. See Procedure 5-3 to convert irregular attachment shapes into suitable shapes for design procedure.
6. For radial loads the stress on the circumferential axis will always govern.
7. The maximum stress due to a circumferential moment is 2–5 times larger than the stress due to a longitudinal moment of the same magnitude.
8. The maximum stress from a longitudinal moment is not located on the longitudinal axis of the vessel and may be 60°–70° off the longitudinal axis. The reason for the high stresses on or adjacent to the circumferential axis is that, on thin shells, the longitudinal axis is relatively flexible and free to deform and that the loads are thereby transferred toward the circumferential axis which is less free to deform. Figures 5-18, 5-19, and 5-20 do not show maximum stresses since their location is unknown. Instead the stress on the longitudinal axis is given.
9. *For attachments with reinforcing pads*: This applies only to attachments that are welded to a reinforcing plate that is subsequently welded to the vessel shell. Attachments that are welded through the pad (like nozzles) can be considered as integral with the shell.

Moment loadings for nonintegral attachments must be converted into radial loads. This will more closely approximate the manner in which the loads are distributed in shell and plate. Stresses should be checked at the edge of attachment

and edge of reinforcing plate. The maximum height of reinforcing pad to be considered is given by:

For radial load:

$$2d_2 \text{ max} = \frac{2C_2 d_1}{C_1}$$

For longitudinal moment:

$$2d_{21} \text{ max} = \frac{4C_2 d_1}{3C_1}$$

For circumferential moment:

$$2d_{11} \text{ max} = \frac{4C_1 d_2}{3C_2}$$

Moments can be converted as follows:

$$P_r = \frac{3M_L}{4C_2}$$

or

$$P_r = \frac{3M_c}{4C_1}$$

10. This procedure is based on the principle of "flexible load surfaces." Attachments larger than one-half the vessel diameter ($\beta > 0.5$) cannot be determined by this procedure. For attachments which exceed these parameters see Procedure 4-1.

PROCEDURE 5-5

STRESSES IN SPHERICAL SHELLS FROM EXTERNAL LOCAL LOADS [11–13]

Notation

P_r = external radial load, lb
M = external moment, in.-lb
R_m = mean radius of sphere, crown radius of F & D, dished or ellipsoidal head, in.
r_o = outside radius of cylindrical attachment, in.
C = half side of square attachment, in.
N_x = membrane force in shell, meridional, lb/in.
N_ϕ = membrane force in shell, latitudinal, lb/in.
M_x = internal bending moment, meridional, in.-lb/in.
M_ϕ = internal bending moment, latitudinal, in.-lb/in.
K_n, K_b = stress concentration factors (See Note 3)
U,S = coefficients
σ_x = meridional stress, psi
σ_ϕ = latitudinal stress, psi
T_c = thickness of reinforcing pad, in.
τ = shear stress, psi
M_T = torsional moment, in.-lb
V = shear load, lb

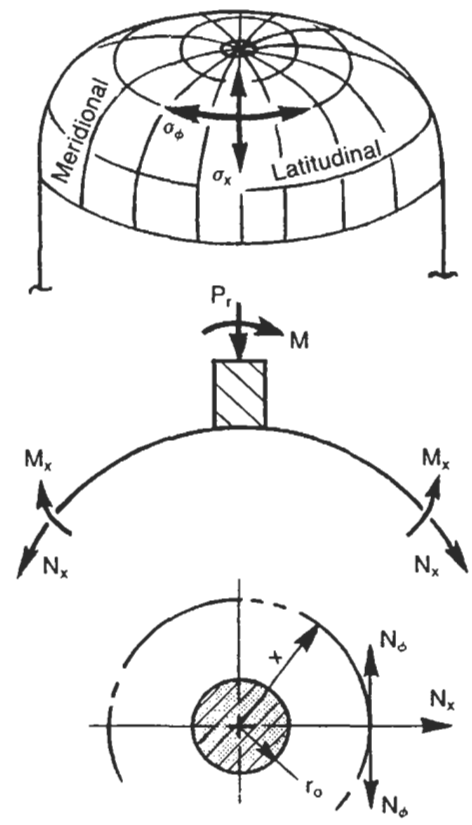

Figure 5-23. Loadings and forces at local attachments in spherical shells.

Procedure

To calculate stress due to radial load (P_r), and/or moment (M), on a spherical shell or head:

1. Calculate value "S" to find stresses at distance x from centerline or value "U" at edge of attachment. *Note:* At edge of attachment, S = U. Normally stress there will govern.
2. From Figures 5-25 to 5-28 determine coefficients for membrane and bending forces and enter values in Table 5-13.
3. Compute stresses in Table 5-13. These stresses are entered into Table 5-14 based on the type of stress (membrane or bending) and the type of load that produced that stress (radial load or moment).
4. Stresses in Table 5-14 are added vertically to total at bottom.

Formulas

- *For square attachment.*

$$r_o = C$$

- *For rectangular attachments.*

$$r_o = \sqrt{C_x C_\phi}$$

- *For multiple moments.*

$$M = \sqrt{M_1^2 + M_2^2}$$

- *For multiple shear forces.*

$$V = \sqrt{V_1^2 + V_2^2}$$

- *General stress equation.*

$$\sigma = \frac{N_i}{T} \pm \frac{6M_i}{T^2}$$

- *For attachments with reinforcing pads.*

$$T \text{ at edge of attachment} = \sqrt{T^2 + T_e^2}$$

$$T \text{ at edge of pad} = T$$

- *Shear stresses.*
Due to shear load

$$\tau = \frac{V}{\pi r_o T}$$

Due to torsional moment, M_T

$$\tau = \frac{M_T}{2\pi r_o^2 T}$$

Stress Indices, Loads, and Geometric Parameters

$r_o =$
$R_m =$
$T =$
$K_n =$
$K_b =$
$P_r =$
$M =$

$$S = \frac{1.82x}{\sqrt{R_m T}}$$

$$U = \frac{1.82 r_o}{\sqrt{R_m T}}$$

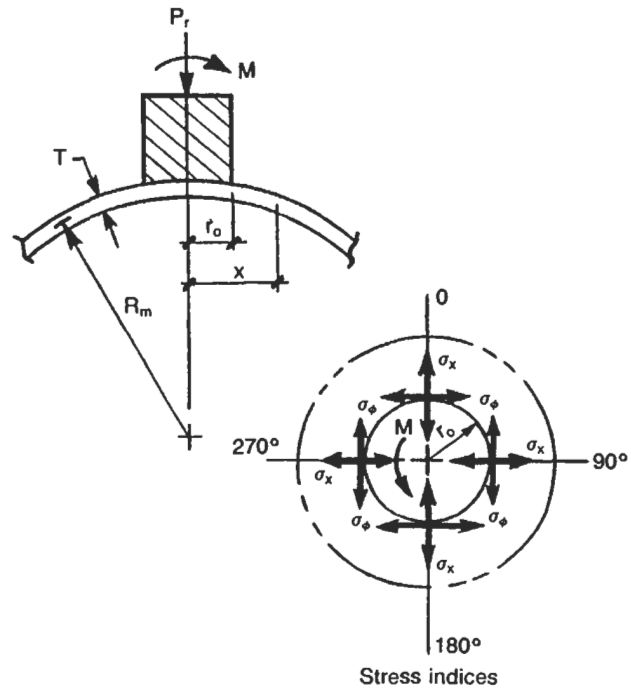

Stress indices

Figure 5-24. Dimensions and stress indices of local attachments.

Table 5-13
Computing Stresses

	Figure	Value from Figure	Stresses
		Radial Load	
Membrane	5-30A	$\frac{N_x T}{P_r} = (\ )$	$\sigma_x = (\ )\frac{K_n P_r}{T^2}$
	5-30B	$\frac{N_\phi T}{P_r} = (\ )$	$\sigma_\phi = (\ )\frac{K_n P_r}{T^2}$
Bending	5-31A	$\frac{M_x}{P_r} = (\ )$	$\sigma_x = (\ )\frac{6K_b P_r}{T^2}$
	5-31B	$\frac{M_\phi}{P_r} = (\ )$	$\sigma_\phi = (\ )\frac{6K_b P_r}{T^2}$
		Moment	
Membrane	5-32A	$\frac{N_x T\sqrt{R_m T}}{M} = (\ )$	$\sigma_x = (\ )\frac{K_n M}{T^2\sqrt{R_m T}}$
	5-32B	$\frac{N_\phi T\sqrt{R_m T}}{M} = (\ )$	$\sigma_\phi = (\ )\frac{K_n M}{T^2\sqrt{R_m T}}$
Bending	5-33A	$\frac{M_x\sqrt{R_m T}}{M} = (\ )$	$\sigma_x = (\ )\frac{6K_b M}{T^2\sqrt{R_m T}}$
	5-33B	$\frac{M_\phi\sqrt{R_m T}}{M} = (\ )$	$\sigma_\phi = (\ )\frac{6K_b M}{T^2\sqrt{R_m T}}$

Table 5-14
Combining Stresses

Stress Due To			σ_x				σ_ϕ			
			0°	90°	180°	270°	0°	90°	180°	270°
Radial load, P_r (Sign is (+) for outward radial load. (−) for inward load)	Membrane	N_x								
		N_ϕ								
	Bending	M_x								
		M_ϕ								
Moment, M	Membrane	N_x	+		−					
		N_ϕ					+		−	
	Bending	M_x	+		−					
		M_ϕ					+		−	
Total		Σ								

Note: Only absolute values of quantities are used. Combine stresses utilizing sign convention of table.

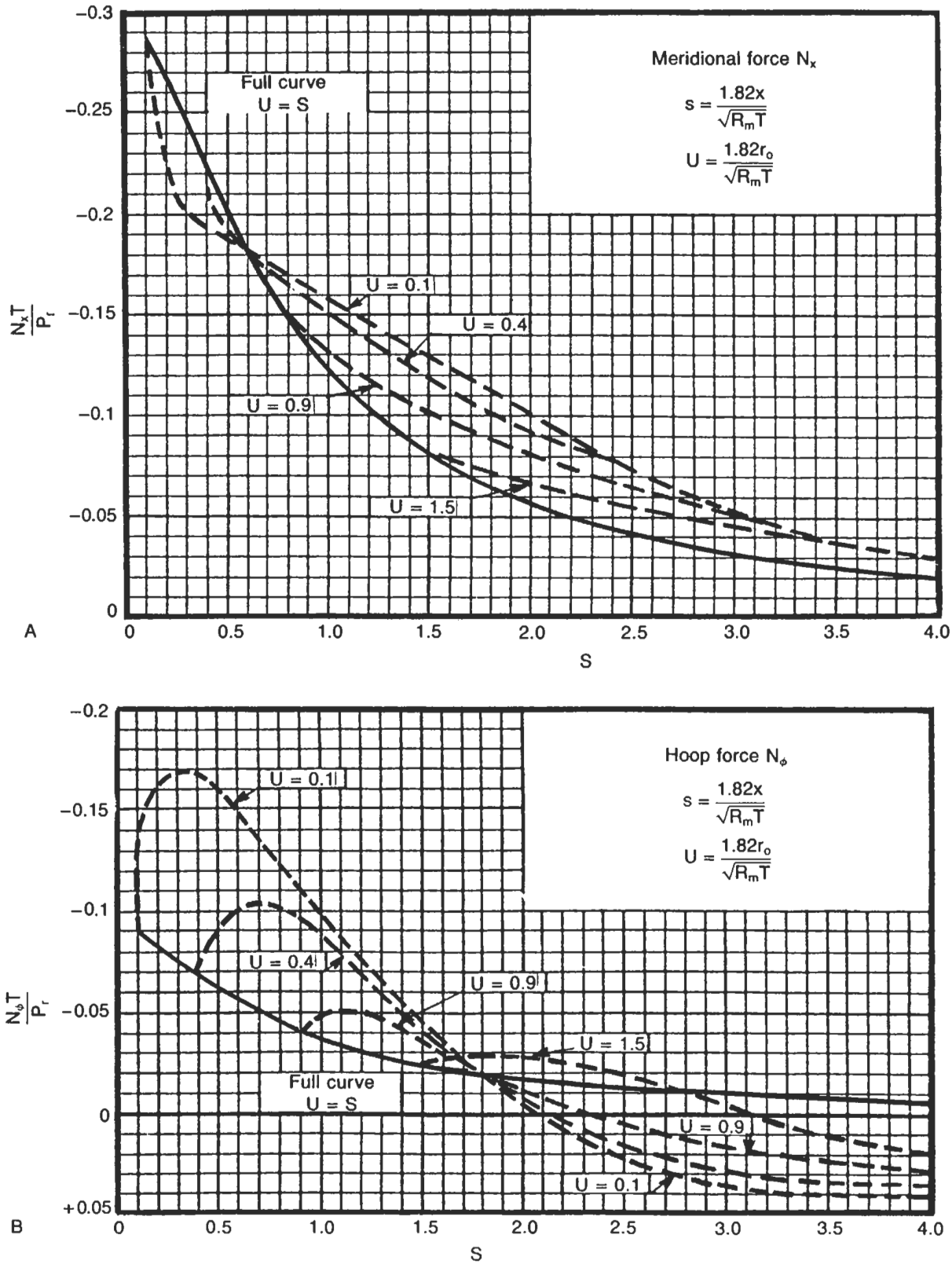

Figure 5-25. Membrane force due to P_r. (Extracts from BS 5500:1985 are reproduced by permission of British Standards Institution, 2 Park Street, London, W1A 2BS, England. Complete copies can be obtained from national standards bodies.)

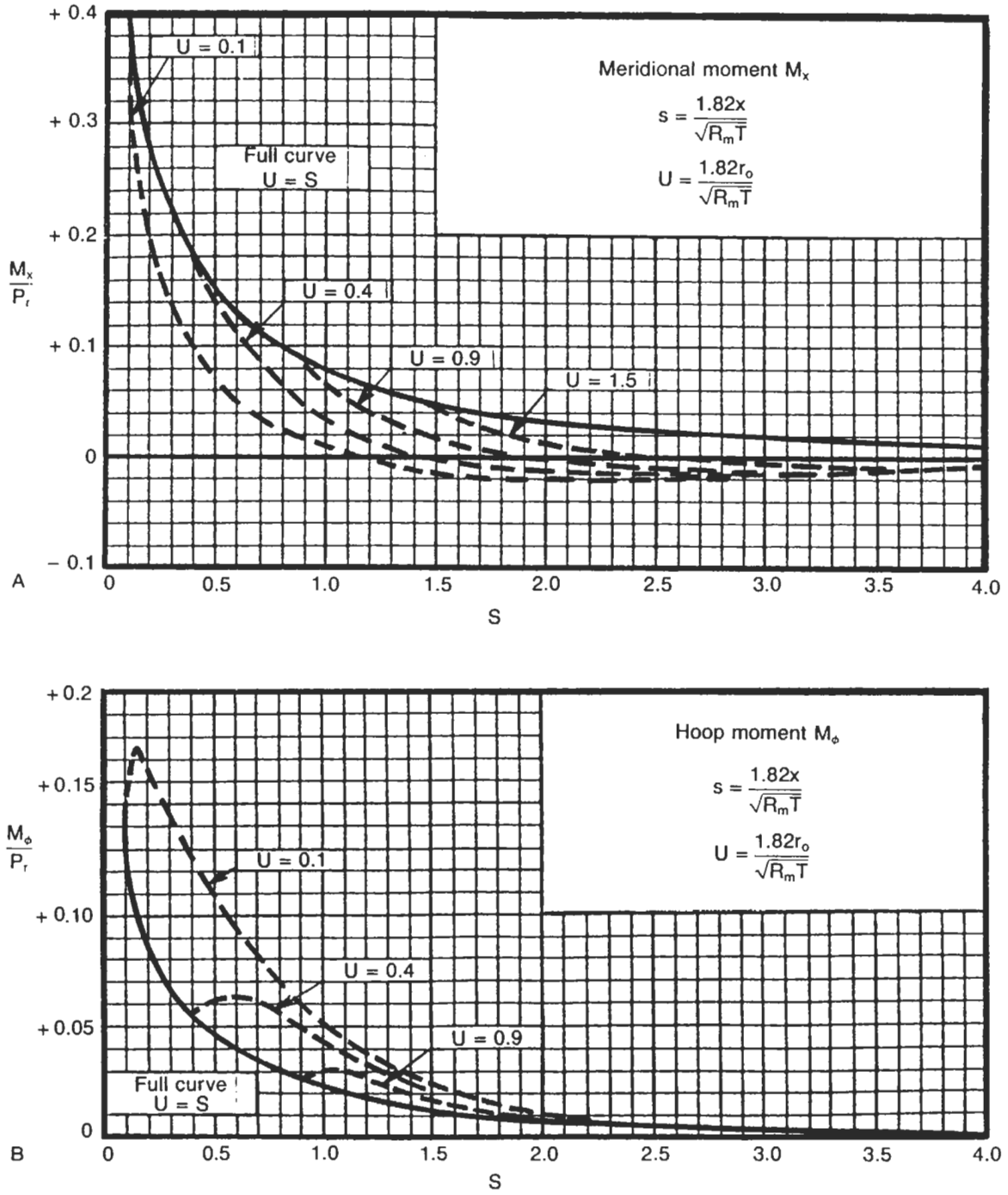

Figure 5-26. Bending moment due to P_r. (Extracts from BS 5500:1985 are reproduced by permission of the British Standards Institution, 2 Park Street, London, W1A 2BS, England. Complete copies can be obtained from national standards bodies.)

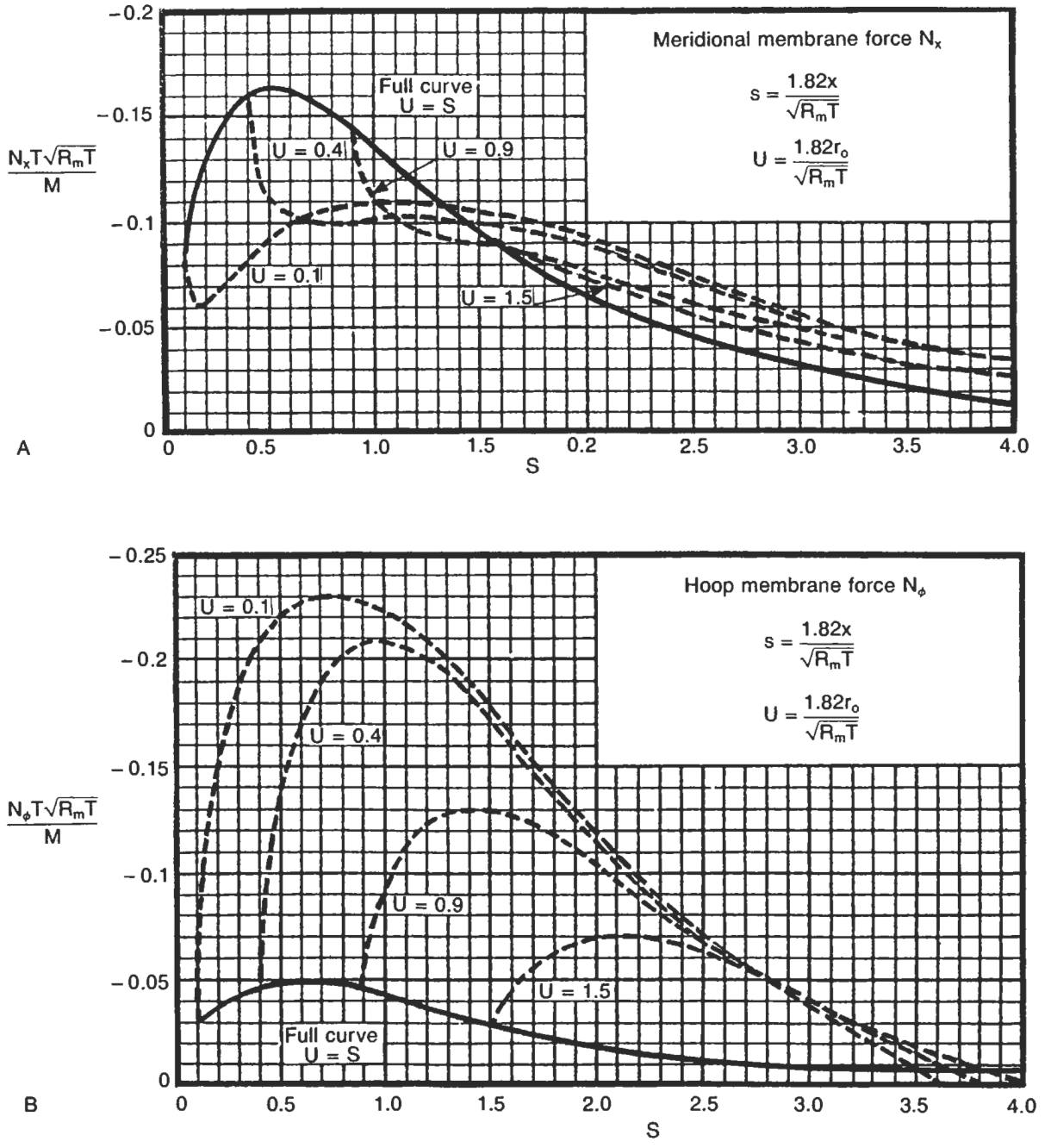

Figure 5-27. Membrane force due to M. (Extracts from BS 5500:1985 are reproduced by permission of the British Standards Institution, 2 Park Street, London, W1A 2BS, England. Complete copies can be obtained from national standards bodies.)

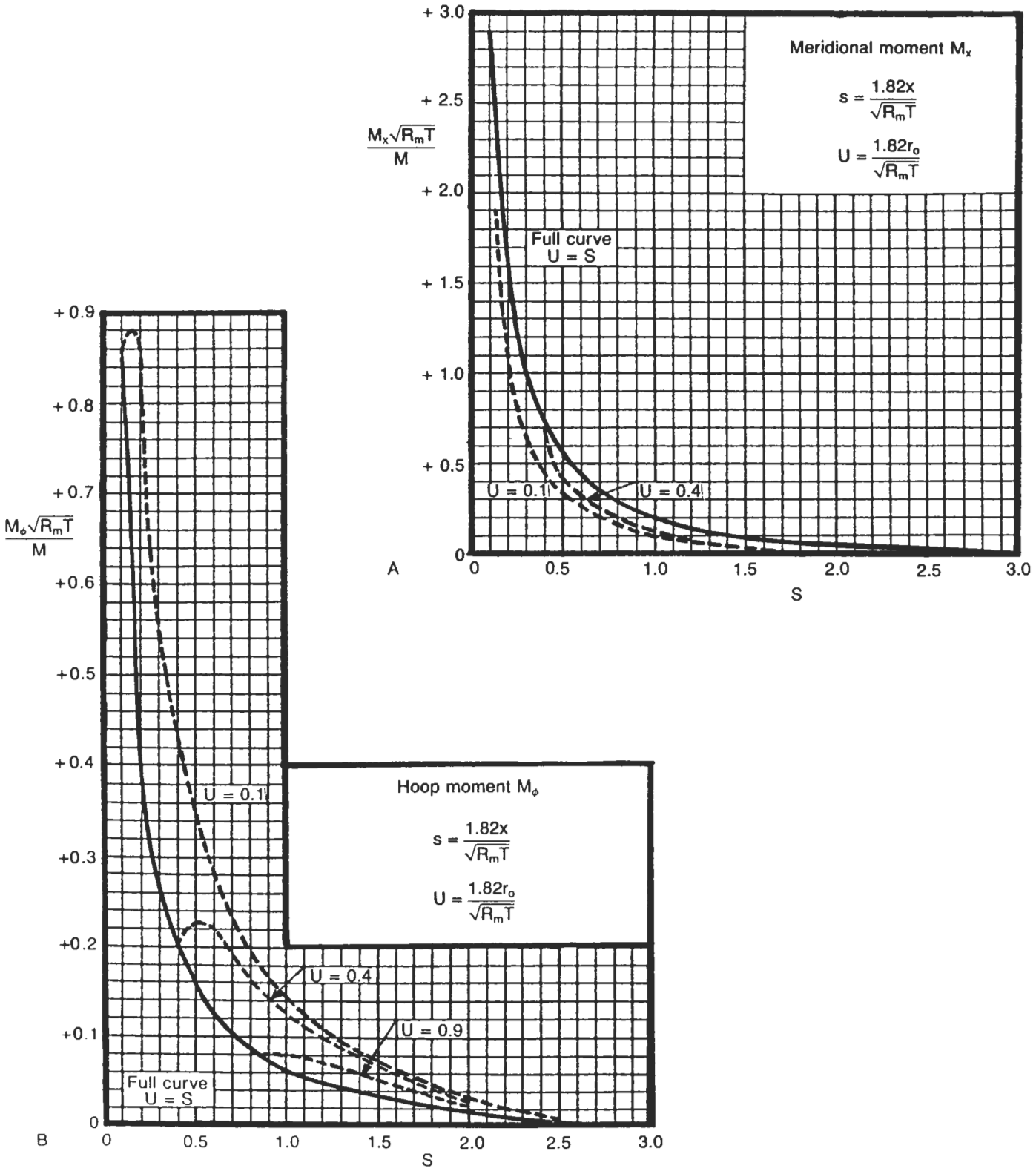

Figure 5-28. Bending moment due to M. (Extracts from BS 5500:1985 are reproduced by permission of the British Standards Institution, 2 Park Street, London, W1A 2BS, England. Complete copies can be obtained from national standards bodies.)

Notes

1. This procedure is based on the "Theory of Shallow Spherical Shells."
2. Because stresses are local and die out rapidly with increasing distance from point of application, this procedure can be applied to the spherical portion of the vessel heads as well as to complete spheres.
3. For "Stress Concentration Factors" see "Stresses in Cylindrical Shells from External Local Loads," Procedure 5-4.
4. For convenience, the loads are considered as acting on a rigid cylindrical attachment of radius r_o. This will yield approximate results for hollow attachments. For more accurate results for hollow attachments, consult WRC Bulletin 107 [11].
5. The stresses found from these charts will be reduced by the effect of internal pressure, but this reduction is small and can usually be neglected in practice. Bijlaard found that for a spherical shell with $R_m/T = 100$, and internal pressure causing membrane stress of 13,000 psi, the maximum deflection was decreased by only 4%–5% and bending moment by 2%. In a cylinder with the same R_m/T ratio, these reductions were about 10 times greater. This small reduction for spherical shells is caused by the smaller and more localized curvatures caused by local loading of spherical shells.

REFERENCES

1. Roark, R. J., *Formulas for Stress and Strain*, 5th Edition, McGraw-Hill Book Co., New York, 1975.
2. Isakower, R. I., "Ring Redundants," *Machine Design*, March 1965.
3. Blake, A., "Stresses in Flanges and Support Rings," *Machine Design*, September 1974.
4. Samoiloff, A., "Investigation of Stress in Circular Rings," *Petroleum Refiner*, July 1947.
5. Blake, A., "Rings and Arcuate Beams," *Product Engineering*, January 1963.
6. Blodgett, O. W., *Design of Welded Structures*, The James F. Lincoln Arc Welding Foundation, 1966, Section 6.6-4.
7. Harvey, J. F., *Theory and Design of Modern Pressure Vessels*, 2nd Edition, Van Nostrand Reinhold Co., 1974.
8. Roark, R. J., "Stresses and Deflections in Thin Shells and Curved Plates Due to Concentrated and Variously Distributed Loading," Technical Note 806, National Advisory Committee on Aeronautics, 1941.
9. "Tentative Structural Design Basis for Reactor Pressure Vessels and Directly Associated Components," PB 151987, United States Dept. of Commerce, December 1958, pp. 62–81.
10. Dodge, W. G., "Secondary Stress Indices for Integral Structural Attachments to Straight Pipe," Welding Research Council Bulletin No. 198, September 1974.
11. Wichman, K. R., Hopper, A. G., and Mershon, J. L., "Local Stresses in Spherical and Cylindrical Shells Due to External Loadings," Welding Research Council Bulletin No. 107, April 1972.
12. Bijlaard, P. P., "Computation of the Stresses from Local Loads in Spherical Pressure Vessels or Pressure Vessel Heads," Welding Research Council Bulletin No. 34, 1957.
13. *BS 5500: Specification for Unfired Fusion Welded Pressure Vessels*, British Standards Institute, London, 1985.

6
Related Equipment

PROCEDURE 6-1

DESIGN OF DAVITS [1, 2]

Notation

C_v = vertical impact factor, 1.5–1.8
C_h = horizontal impact factor, 0.2–0.5
f_a = axial stress, psi
f_b = bending stress, psi
f_h = horizontal force, lb
f_v = vertical force, lb
F_a = allowable axial stress, psi
F_b = allowable bending stress, psi
F_r = radial load, lb
F_w = equivalent radial load, lb
F_y = minimum specified yield stress, psi
M_1 = bending moment in mast at top guide or support, in.-lb
M_2 = maximum bending moment in curved davit, in.-lb
M_3 = bending moment in boom, in.-lb
M_x = longitudinal moment, in.-lb
M_ϕ = circumferential moment, in.-lb
W_1 = weight of boom and brace, lb
W_D = total weight of davit, lb
W_L = maximum rated capacity, lb
α,β,K = stress coefficients
P = axial load, lb
I = moment of inertia, in.^{4}
A = cross-sectional area, in.^{2}
Z = section modulus, in.^{3}
r = least radius of gyration, in.
t_p = wall thickness of pipe davit, in.
a = outside radius of pipe, in.

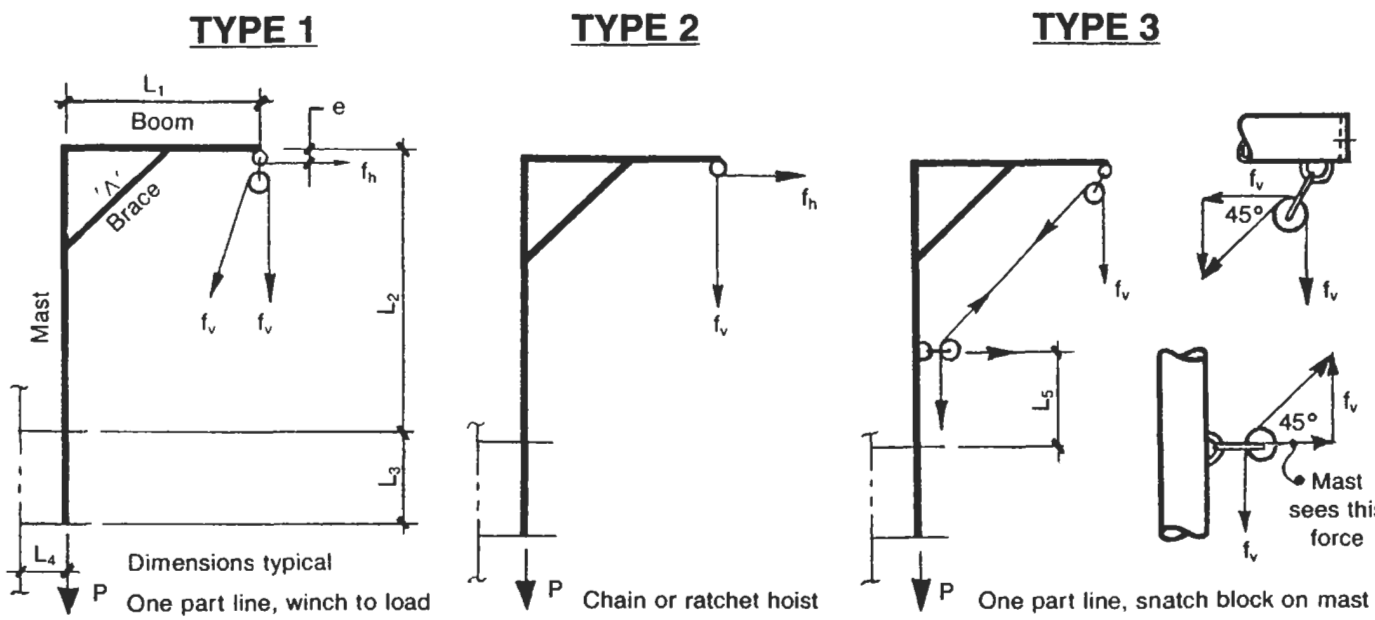

Figure 6-1. Types of rigging.

Moments and Forces in Davit and Vessel

- *Loads on davit.*

$f_v = C_v W_L$
$f_h = C_h W_L$

- *Bending moment in davit mast, M_1.*

Type 1: $M_1 = 2f_v L_1 + 0.5W_1 L_1 + f_h L_2$
Type 2: $M_1 = f_v L_1 + 0.5W_1 L_1 + f_h L_2$
Type 3: $M_1 = f_v(2L_1 + L_5 - L_2) + 0.5W_1 L_1 + f_h L_2$

- *Radial force at guide and support, F_r.*

$$F_r = \frac{M_1}{L_3}$$

F_r is maximum when davit rotation ϕ is at 0°, for other rotations:

$F_r = F_r \cos\phi$

- *Circumferential moment at guide and support, M_ϕ*

$M_\phi = F_r L_4$

M_ϕ is maximum when davit rotation ϕ is at 90°, for other rotations:

$M_\phi = F_r L_4 \sin\phi$

- *Axial load on davit mast, P.*

Type 1 or 3: $P = 2f_v + W_D$
Type 2: $P = f_v + W_D$

- *Longitudinal moment at support, M_x.*

$M_x = PL_4$

Stresses in Davit

Mast Properties

$I =$
$A =$
$Z =$
$r =$
$t_p =$
$a =$

Slenderness ratio:

$$\frac{2.1L_2}{r} =$$

$F_a =$ (See App. L.)
$F_b = 0.6F_y$

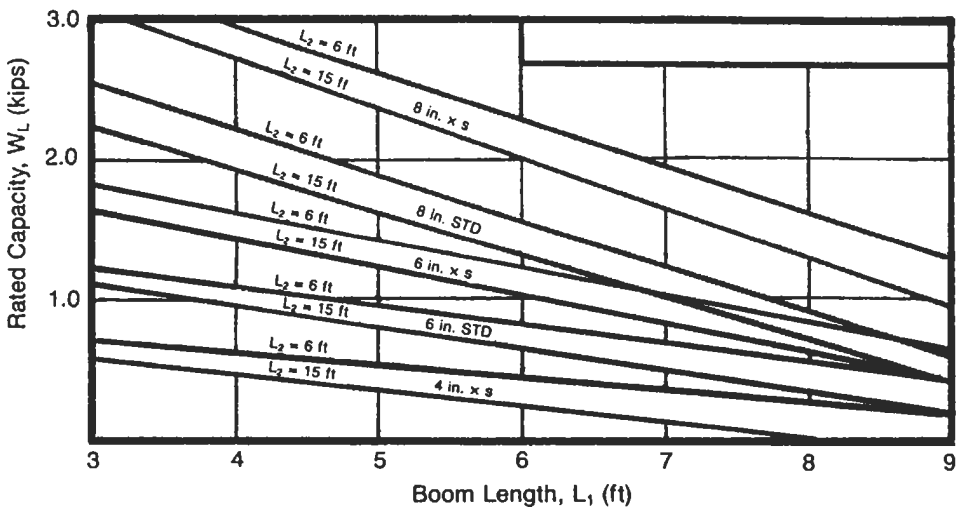

Figure 6-2. Davit selection guide.

Type A Davit

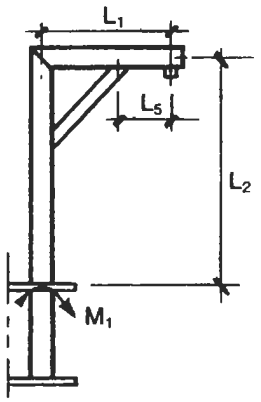

Figure 6-3. Type A davit.

- *Axial stress—mast.*

$$f_a = \frac{P}{A}$$

- *Bending stress—mast.*

$$f_b = \frac{M_1}{Z}$$

- *Combined stress—mast.*

$$\frac{f_a}{F_a} + \frac{f_b}{F_b} = \qquad < 1$$

- *Bending stress—boom.*

$$\text{Type 1: } f_b = \frac{2f_v L_5}{Z}$$

$$\text{Type 2 or 3: } f_b = \frac{f_v L_5}{Z}$$

Type B Davit

- *Axial stress.*

$$f_a = \frac{P}{A}$$

- *Bending moment, M_2.*

$$M_2 = \frac{M_1(L_2 - R)}{L_2}$$

- *Bending stress.*

$$\text{At } M_1,\ f_b = \frac{M_1}{Z}$$

$$\text{At } M_2,\ f_b = \frac{M_2 a}{I}\left(\frac{2}{3K\sqrt{3\beta}}\right)$$

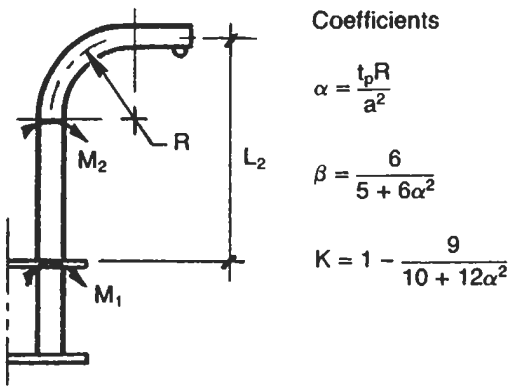

Figure 6-4. Type B davit.

- *Combined stress.*

$$\frac{f_a}{F_a} + \frac{f_b}{F_b} = \qquad < 1$$

Finding Equivalent Radial Load, F_{re}

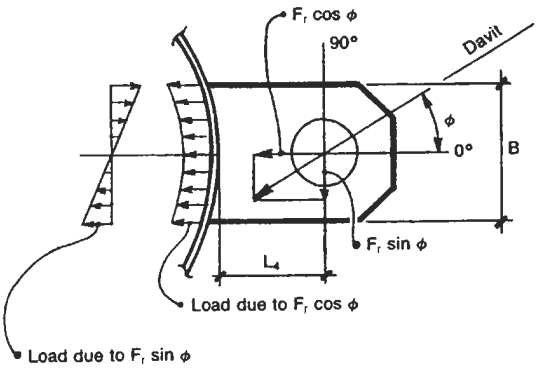

Figure 6-5. Forces in davit guide.

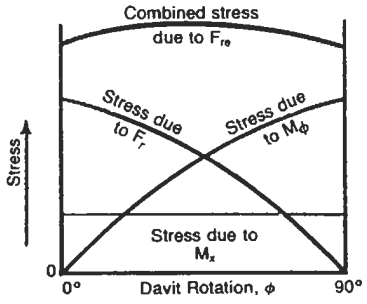

Figure 6-6. Graph of combined stress for various davit rotations.

- *Equivalent unit load, w, lb/in.*

$$w = \frac{F_r \cos\phi}{B} + \frac{6F_r \sin\phi\, L_4}{B^2}$$

- *Equivalent radial load, F_{re}, lb.*

$$F_{re} = \frac{wB}{2}$$

- *Calculate F_{re} for various angles of davit rotation.*

Shell Stresses (See Note 1)

At Support: Utilizing the area of loading as illustrated in Figure 6-8, find shell stresses due to loads M_x, M_ϕ, and F_r by an appropriate local load procedure.

ϕ	W	F_{re}

At Guide: Utilizing the area of loading as illustrated in Figure 6-9, find shell stresses due to loads M_ϕ and F_r by an appropriate local load procedure.

Note: F_{re} may be substituted for M_ϕ and F_r as an equivalent radial load for any rotation of davit other than 0° or 90°.

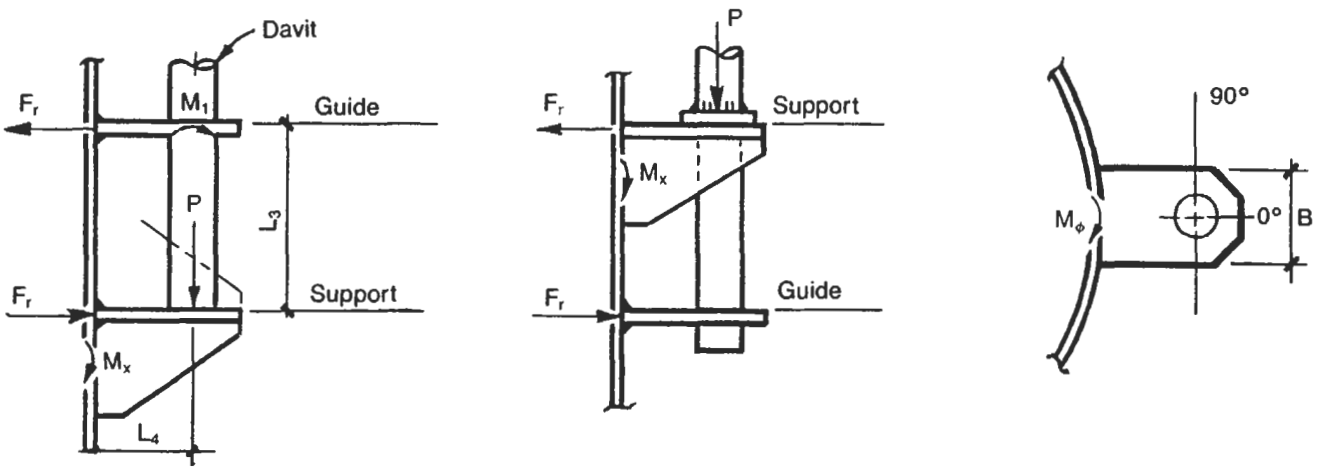

Figure 6-7. Dimensions of forces at davit support and guide.

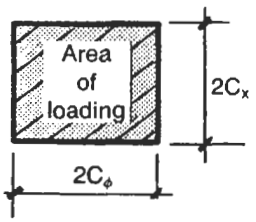

Figure 6-8. Area of loading at davit support.

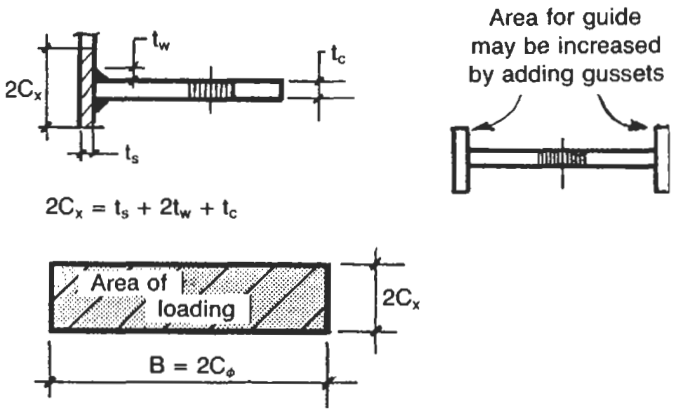

Figure 6-9. Area of loading at davit guide.

Davit Arrangement

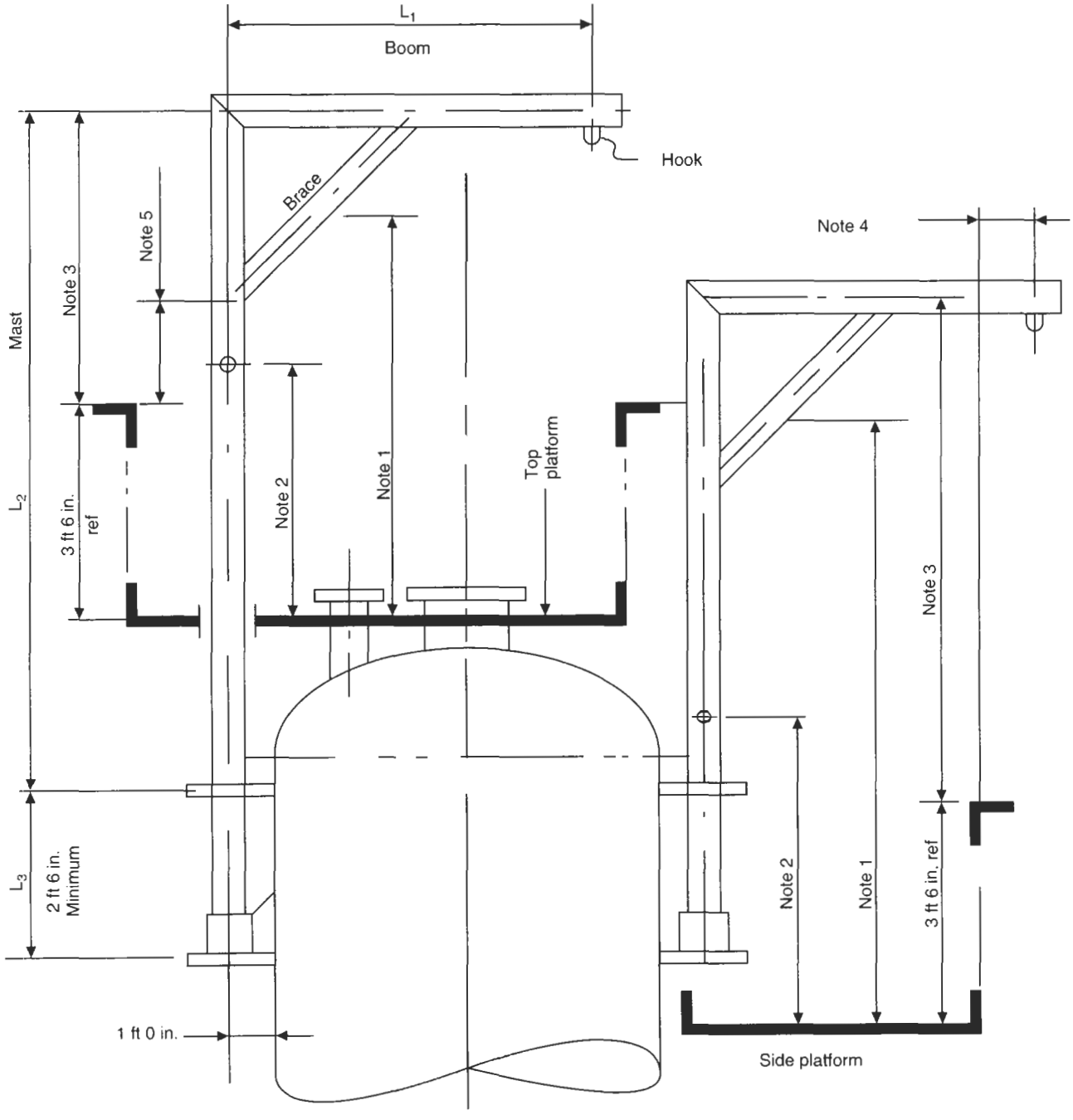

Notes:

1. Check head clearance to middle of brace, 7 ft 0 in. minimum.
2. Set location of turning handle, 4 ft 0 in. minimum.
3. Check that equipment handled plus any rigging gear will clear handrail, 3 ft 0 in. minimum. As an alternative, the handrail may be made removable.
4. Check hook clearance to outside of platform, 9 in. minimum.
5. Check clearance between bottom of brace and handrail, 6 in. minimum.

Notes

1. Figure 6-6 illustrates the change in the total combined stress as the davit is rotated between 0° and 90°. As can be seen from the graph the stress due to M_x is constant for any degree of davit rotation. This stress occurs only at the support. The stress due to F_r varies from a maximum at 0° to 0 at 90°. The stress due to M_ϕ is 0 at 0° and increases to a maximum at 90°. To find the worst combination of stress, the equivalent radial load, F_{re} must be calculated for various degrees of davit rotation, ϕ. At the guide shell stresses should be checked by an appropriate local load procedure for the maximum equivalent radial load. At the support shell stresses should be checked for both F_{re} and M_x. Stresses from applicable external loads shall be combined. Remember the force F_{re} is a combination of loads F_r and M_ϕ at a given davit orientation. F_r and M_ϕ are maximum values that do not occur simultaneously.
2. Impact factors account for bouncing, jerking, and swinging of loads.

PROCEDURE 6-2

DESIGN OF CIRCULAR PLATFORMS

Notation

$$\text{Area} = \frac{(R^2 - r^2)\pi\phi}{360}$$

$$\text{Arc length, } l = \frac{\pi R\theta}{180}$$

$$\text{Angle, } \theta = \frac{180l}{\pi R}$$

$$X = \sqrt{R^2 - A^2} - \sqrt{r^2 - A^2}$$

$$Y = L - \sqrt{r^2 - A^2}$$

f = dead load + live load, psf
f_b = bending stress, beam, psi
f_a = axial stress, psi
$f_{x,y,r}$ = bolt loads, lb
F = total load on bracket, lb
A = load area, ft^2
A' = cross-sectional area of kneebrace, $in.^2$
M_1 = moment at shell, ft-lb
M_2 = moment at bolts, ft-lb or in.-lb
C = distance to C.G. of area, ft
K = end connection coefficient, use 1.0
r' = radius of gyration, in.
P = axial load on kneebrace, lb
Z = section modulus of beam, $in.^3$

Table 6-1

Diameter (ft)	α
2	23°
4	17°
6	14°
8	11.5°
10	10°
12	9°
14	8°
16	7°
18	6°
20	5.5°

Note: Values in table are approximate only for estimating use.

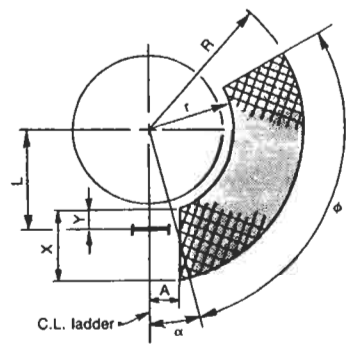

Figure 6-10. Dimensions of a typical circular platform.

AREA OF PLATFORMS				
Platform	ϕ	R	r	Area

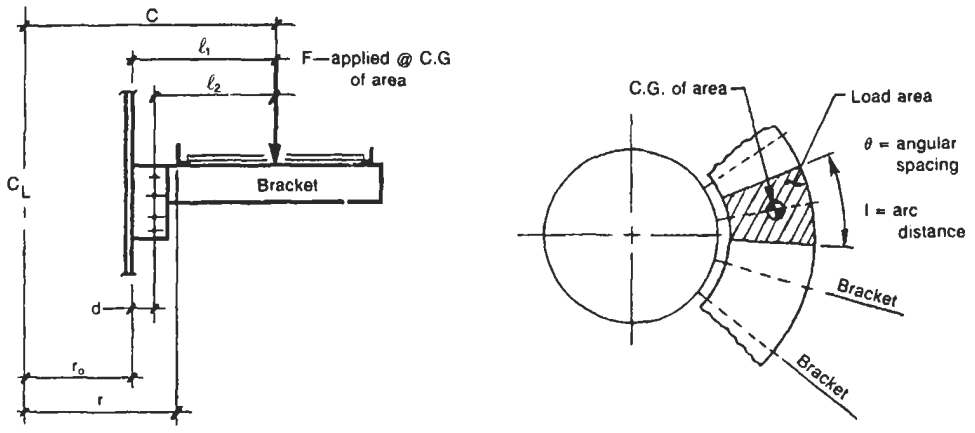

Figure 6-11. Dimensions, force, and local area for circular platforms.

COMPUTING MOMENTS IN SHELL AND BOLT LOADS

MOMENTS IN SHELL:										TYPE CLIP	BOLT LOADS			
Platform	θ	R	r	A	F	C	l_1	l_2	M_1		M_2	f_x	f_y	f_r

Formulas for Chart

$$A = \frac{(R^2 - r^2)\pi\theta}{360}$$

$$F = fA$$

$$C = \frac{38.197(R^3 - r^3)\sin\theta/2}{(R^2 - r^2)\theta/2}$$

$$l_1 = C - r_o$$

$$l_2 = l_1 - d$$

$$M_1 = l_1 F$$

$$M_2 = l_2 F$$

Table 6-2
Allowable Loads in Bolts (kips)

Material	Size (in.)				
	5/8	3/4	7/8	1	1-1/8
A-307	3.1	4.4	6.0	7.9	9.9
A-325	6.4	9.3	12.6	16.5	20.9

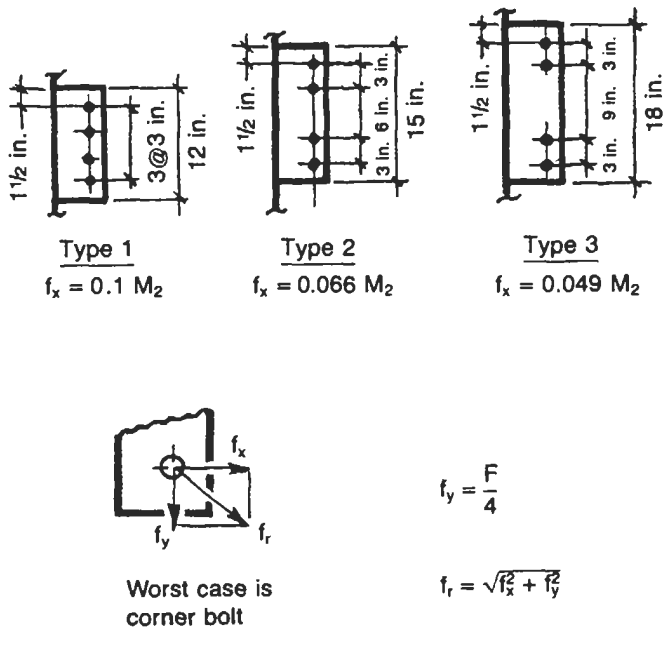

Figure 6-12. Bolt load formulas for various platform support clips. (See Figure 6-16 for additional data.)

Design of Kneebrace

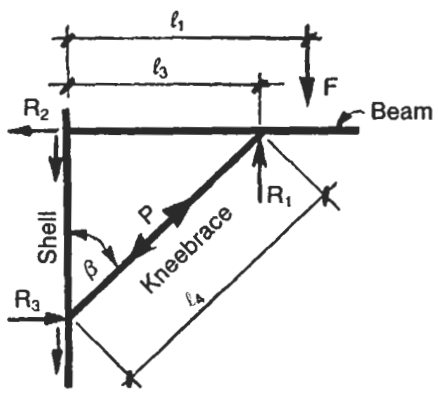

Figure 6-13. Dimensions, forces, and reactions of kneebrace support.

- *Reaction, R_1.*

$$\sum M_{R_2} = l_1F - l_3R_1 = 0 \qquad \therefore R_1 = \frac{l_1F}{l_3}$$

- *Shear load on bolts/radial load on shell.*

$$R_2 = R_3 = R_1 \tan \beta$$

- *Bending stress in beam.*

$$f_b = \frac{|l_1 - l_3|F}{Z}$$

- *Axial load in kneebrace.*

$$P = \frac{R_1}{\cos \beta}$$

- *Axial stress.*

$$f_a = \frac{P}{A'}$$

- *Slenderness ratio/allowable stress.*

$$\frac{Kl_4}{r'} = F_a = \text{see Appendix L}$$

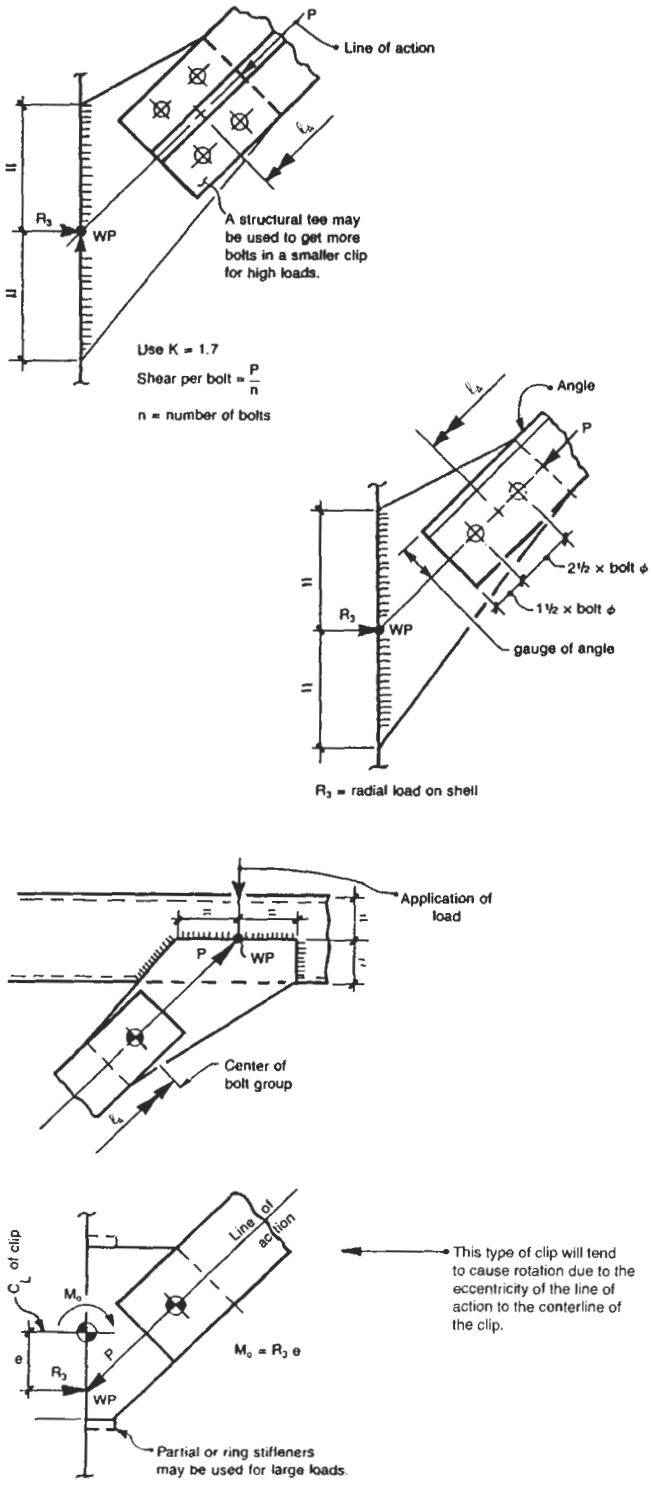

Figure 6-14. Typical bolted connections for kneebrace supports.

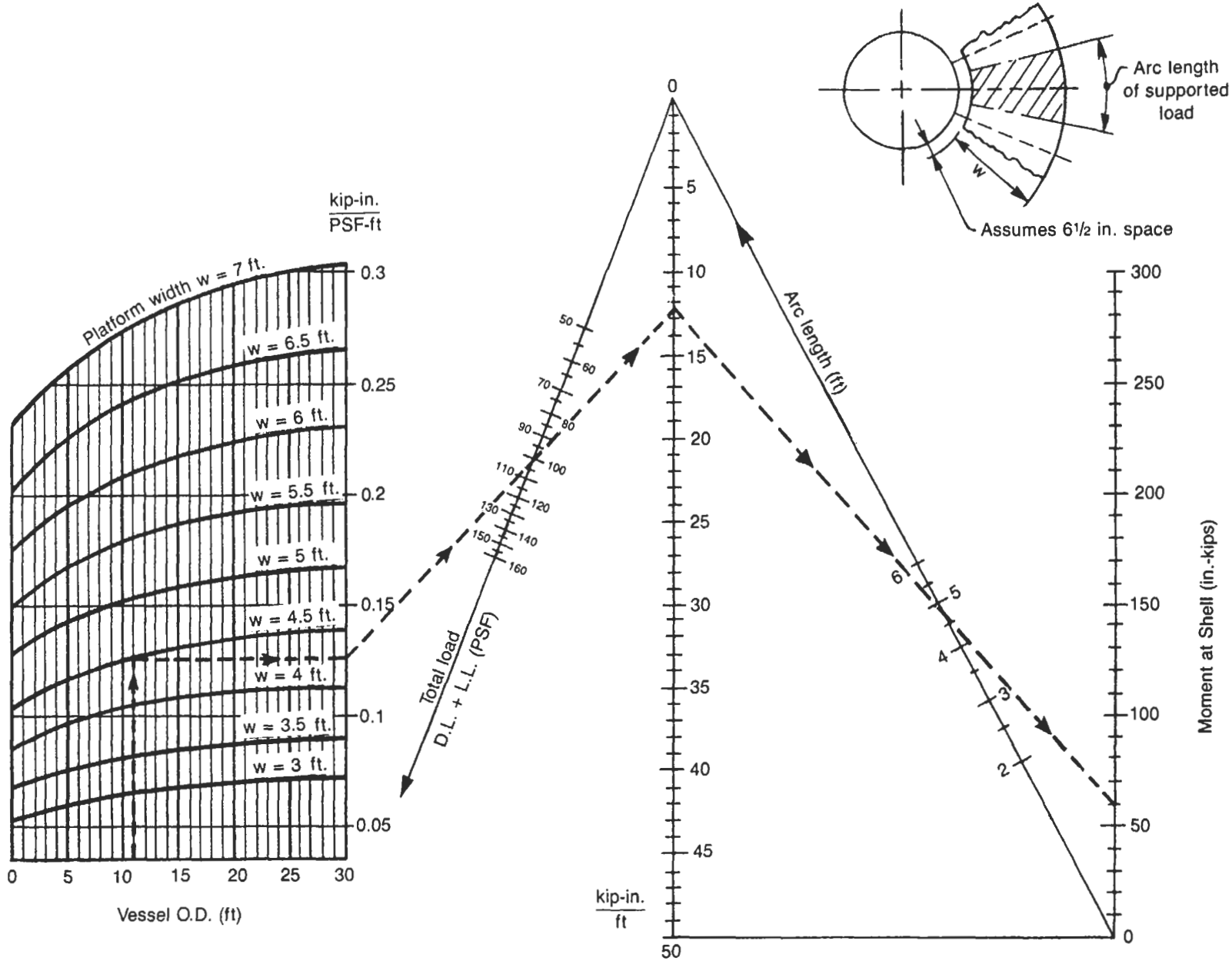

Figure 6-15. Nomograph to find moment at shell due to platform loads.

Table 6-3
Grating: Allowable Live Load Based on Fiber Stress of 18,000 psi

Main Bar Size	Sec. Mod./ft width	Weight lb/sq ft	Bearing Bars at 1 3/8 Center to Center—Cross Bars at 4 in. Span (ft-in.)										
			Type*	1-0	1-6	2-0	2-6	3-0	3-6	4-0	4-6	5-0	5-6	6-0
1 × 1/4	0.380	9.0	U	4562	2029	1142	731	506	372	286	224			
			C	2283	1522	1142	912	762	653	571	506			
1 × 5/16	0.474	11.9	U	5687	2529	1423	910	633	465	355	282			
			C	2845	1898	1423	1139	947	812	712	633			
1 1/4 × 1/4	0.594	10.9	U	7126	3169	1782	1141	793	583	446	353	286	236	196
			C	3564	2376	1782	1426	1186	1019	892	792	713	648	595
1 1/4 × 5/16	0.741	14.3	U	8888	3948	2221	1423	986	726	555	438	355	295	246
			C	4445	2963	2221	1778	1482	1268	1112	986	889	808	742
1 1/2 × 1/4	0.856	12.9	U	10265	4564	2567	1641	1142	836	641	506	412	339	286
			C	5132	3423	2567	2052	1712	1468	1282	1140	1027	932	856
1 1/2 × 5/16	1.066	16.7	U	12796	5689	3198	2048	1423	1045	798	632	512	422	355
			C	6396	4266	3198	2558	2133	1826	1599	1422	1279	1163	1066
1 1/2 × 3/8	1.276	19.6	U	15312	6806	3829	2451	1702	1251	958	758	613	506	425
			C	7654	5105	3829	3063	2553	2188	1914	1702	1532	1393	1276
1 3/4 × 1/4	1.164	14.8	U	13963	6206	3492	2233	1553	1140	875	691	559	463	386
			C	6981	4656	3492	2792	2326	1996	1745	1552	1396	1270	1165
1 3/4 × 5/16	1.451	19.1	U	17411	7738	4352	2788	1936	1422	1087	861	696	576	484
			C	8708	5805	4352	3483	2903	2488	2176	1935	1742	1583	1452
1 3/4 × 3/8	1.737	22.5	U	20842	9262	5210	3336	2315	1702	1302	1029	834	688	579
			C	10420	6949	5210	4169	3473	2978	2604	2315	2085	1895	1738
2 × 1/4	1.520	16.7	U	18242	8107	4562	2918	2026	1489	1141	902	730	604	507
			C	9121	6082	4562	3648	3040	2608	2281	2027	1825	1858	1521
2 × 5/16	1.895	21.5	U	22740	10102	5686	3637	2526	1858	1422	1123	910	753	633
			C	11371	7581	5686	4547	3791	3248	2842	2529	2275	2067	1895
2 × 3/8	2.269	25.4	U	27224	12098	6808	4356	3026	2223	1702	1344	1088	900	758
			C	13613	9073	6808	5446	4536	3888	3401	3026	2723	2476	2269

*U—uniform
C—concentrated

Table 6-4
Floor Plate: Allowable Live Load Based on Fiber Stress of 20,000 psi

Long Span (ft-in.)	Nominal Thickness (in.)	Short Span (ft-in.)							
		2-6	3-0	3-6	4-0	4-6	5-0	5-6	6-0
Supports on Four Sides									
2-6	1/4	656							
	5/16	1026							
3-0	1/4	514	452						
	5/16	806	708						
3-6	1/4	441	366	328					
	5/16	691	573	515					
4-0	1/4	393	316	274	249				
	5/16	617	496	431	391				
4-6	1/4	366	284	239	210	195			
	5/16	575	446	376	331	307			
5-0	1/4	350	262	215	185	167	156		
	5/16	550	411	338	291	264	246		
5-6	1/4	340	248	198	168	148	135	126	
	5/16	532	391	312	265	234	214	201	
6-0	1/4	330	240	187	154	134	120	111	104
	5/16	517	377	293	244	213	191	173	166
6-6	1/4			178	145	124	109	96	93
	5/16			281	230	197	174	158	140
7-0	1/4			173	138	116	101	91	83
	5/16			273	218	184	162	145	135
7-6	1/4			170	133	111	95	84	76
	5/16			268	210	175	152	135	122
8-0	1/4					106	90	79	71
	5/16					168	143	127	114
8-6	1/4					102	86	75	67
	5/16					163	137	120	106
9-0	1/4							72	63
	5/16							114	101
Supports on Two Sides									
∞	1/4	255	174	125	93	71	55		
∞	5/16	402	275	198	148	114	90	72	58

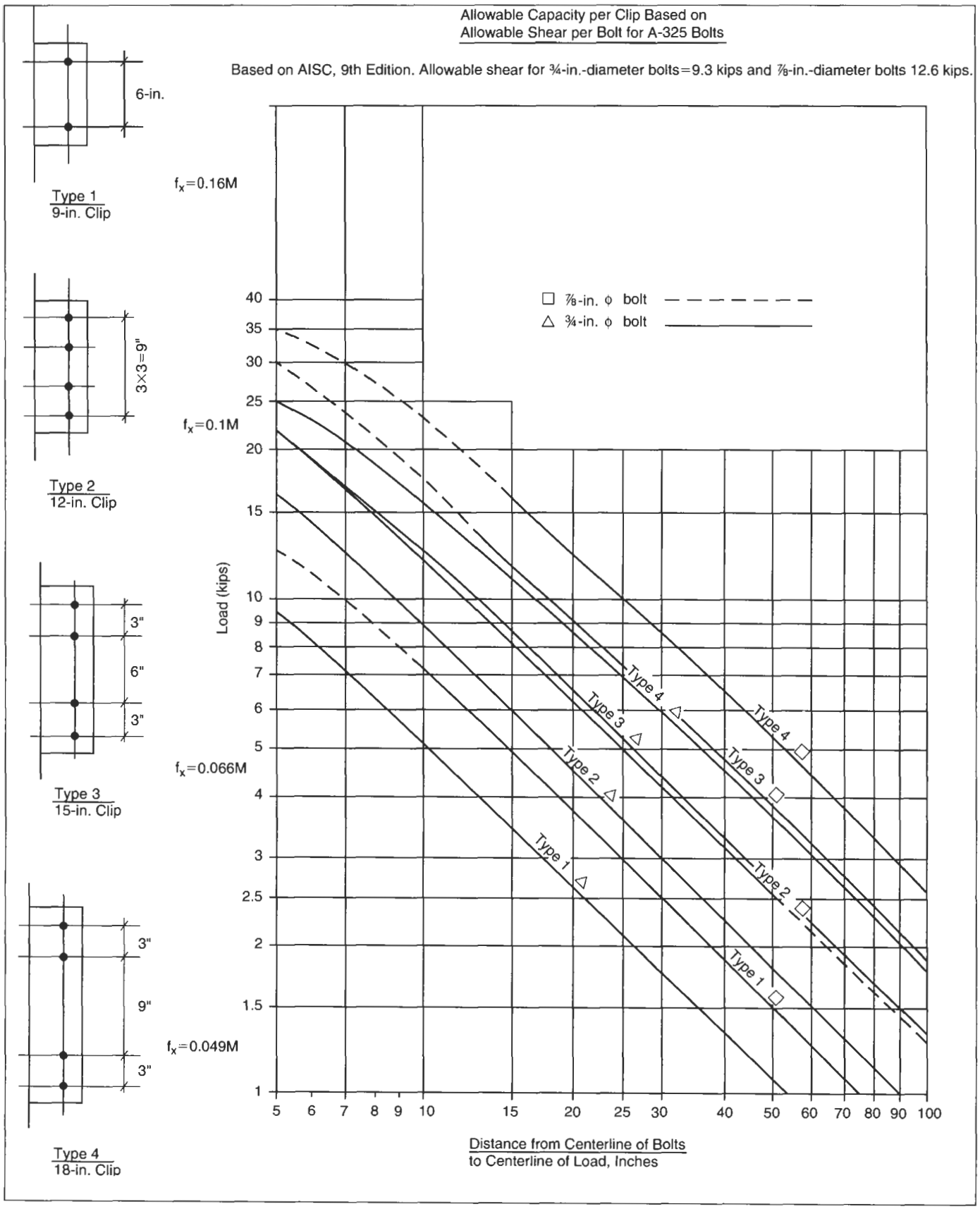
Allowable Capacity per Clip Based on
Allowable Shear per Bolt for A-325 Bolts
Based on AISC, 9th Edition. Allowable shear for ¾-in.-diameter bolts=9.3 kips and ⅞-in.-diameter bolts 12.6 kips.
6-in.
Type 1
9-in. Clip
f_x=0.16M
3×3=9"
Type 2
12-in. Clip
f_x=0.1M
3"
6"
3"
Type 3
15-in. Clip
f_x=0.066M
3"
9"
3"
Type 4
18-in. Clip
f_x=0.049M
□ ⅞-in. ϕ bolt
△ ¾-in. ϕ bolt
Load (kips)
40
35
30
25
20
15
10
9
8
7
6
5
4
3
2.5
2
1.5
1
5 6 7 8 9 10 15 20 25 30 40 50 60 70 80 90 100
Type 4
Type 3
Type 2
Type 1
Distance from Centerline of Bolts
to Centerline of Load, Inches

Notes

1. *Dead loads*: 30 psf. Platform steel weight. This includes grating or floor plate, structural framing, supports, toe angle or plate, and handrailing. To find weight of steel, multiply area of platforms by 30 psf.
2. *Live loads*:
   - *Operating*: Approximately 25–30 psf. Live load is small because it is assumed there are not a lot of people or equipment on the platform while vessel is operating. Combine effects with shell stress due to design pressure.
   - *Maintenance/construction*: 50–75 psf. Live load is large because there could be numerous persons, tools, and equipment on platforms; however, there would be no internal pressure on vessel.
3. Assume each bracket shares one-half of the area between each of the adjoining brackets. Limit bracket spacing to 6 ft-0 in. arc distance and overhangs to 2 ft-0 in. For stability, bracket spacing should not exceed 60°.
4. Kneebraces should be 45° wherever possible. Always dimension to bolt holes, not to edge of brackets or top of clips.
5. Bracket spacing is governed by one of the following conditions:
   - *Shell stress*: Based on dead-load and live-load induced stress from platform support brackets. Shell stresses may be reduced by using a longer clip or reducing the angle between brackets.
   - *Bolt shear stress*: A-307 or A-325 in single or double shear. Bolt shear stresses may be reduced by increasing the size or number of bolts or increasing the distance between bolts.
   - *Maximum arc distance*: Measured at the outside of the platform. Based on the ability of the toe angle to transmit loads to brackets. Affects "stability" of platform.
   - *Stress/deflection of floor plate or grating*: Allowable live load affects "springiness of platforms." Use Tables 6-3 and 6-4 and assume "allowable live load" of 150–200 psf.
6. Shell stresses should be checked by an appropriate "local load" procedure.

PROCEDURE 6-3

DESIGN OF SQUARE AND RECTANGULAR PLATFORMS

Top Platforms for Vertical Vessels

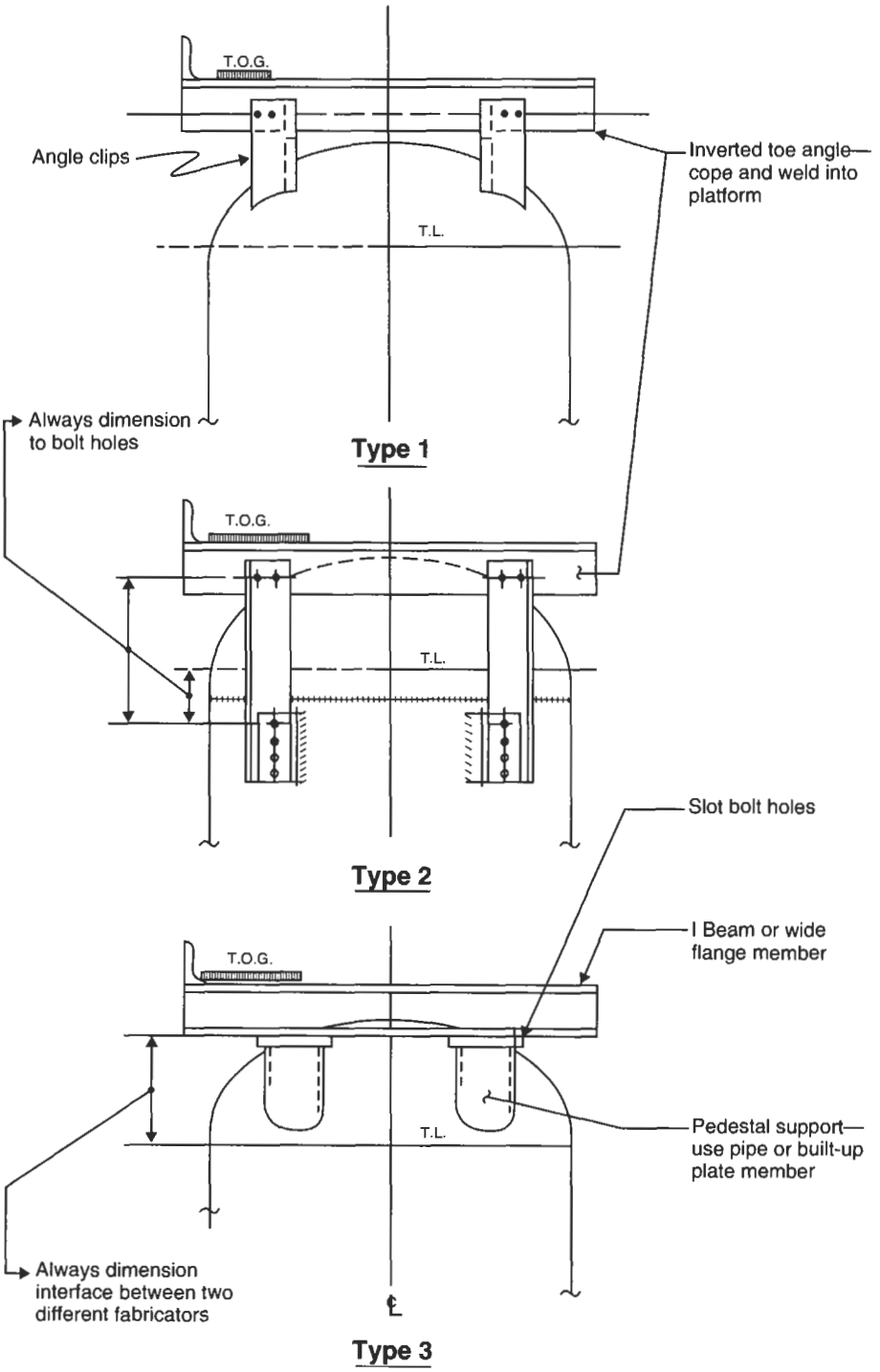

Platforms for Horizontal Vessels

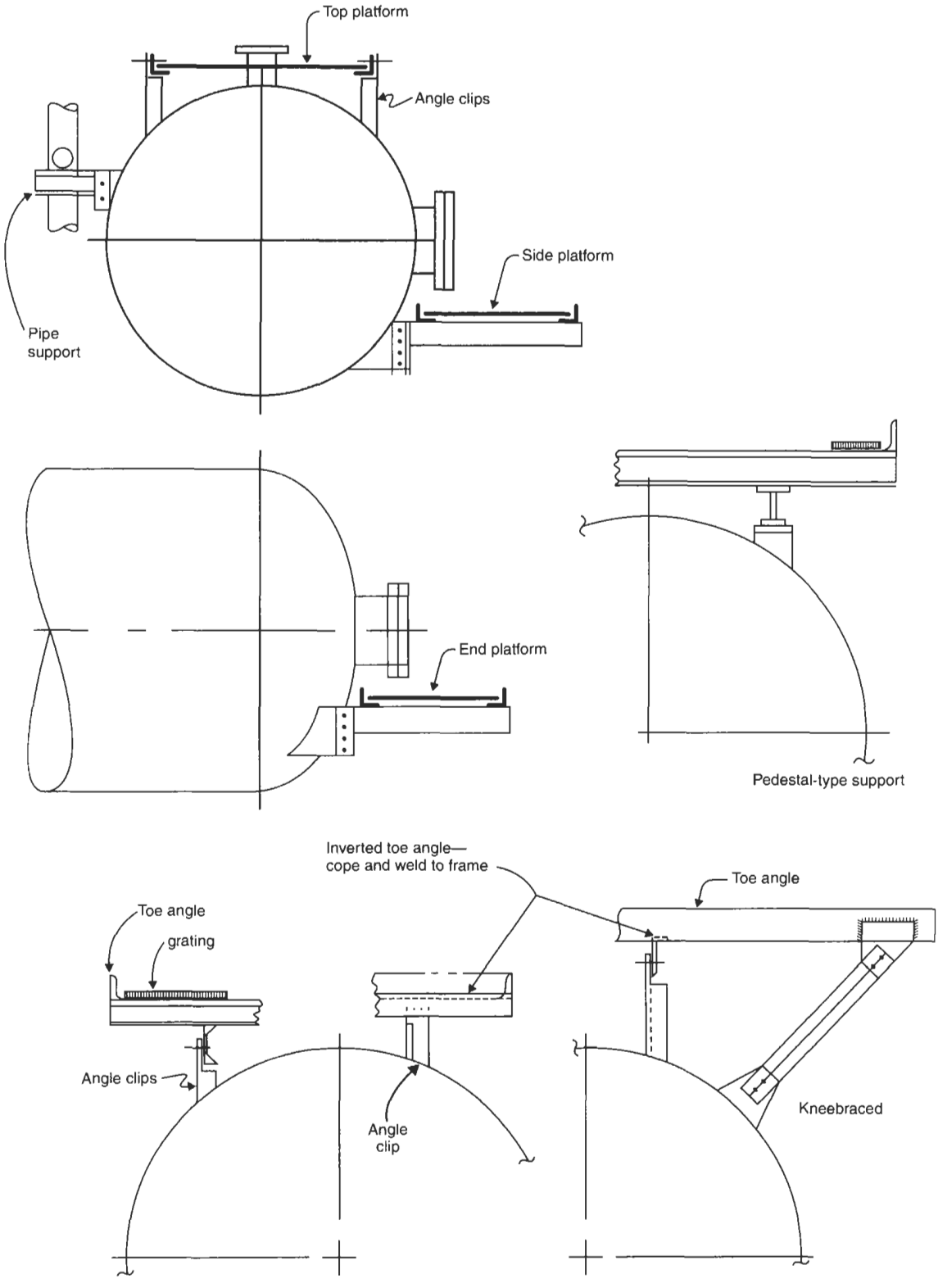

Long Walkways or Continuous Platform on Horizontal Vessel

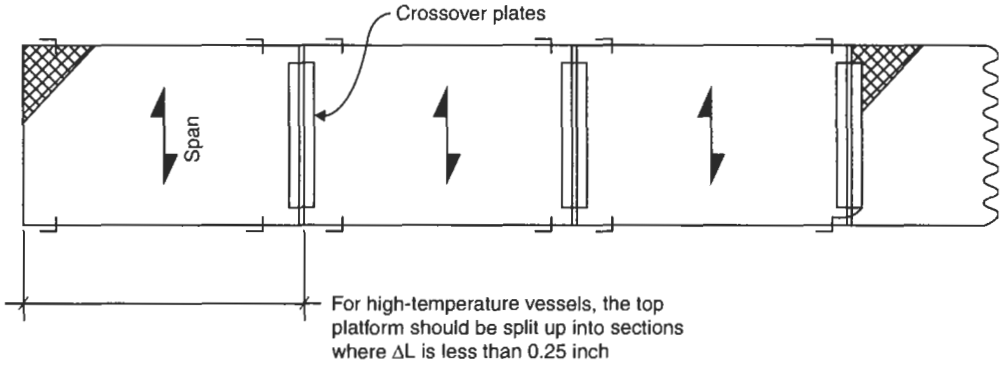

Horizontal Platform Splice (Not for Thermal Expansion)

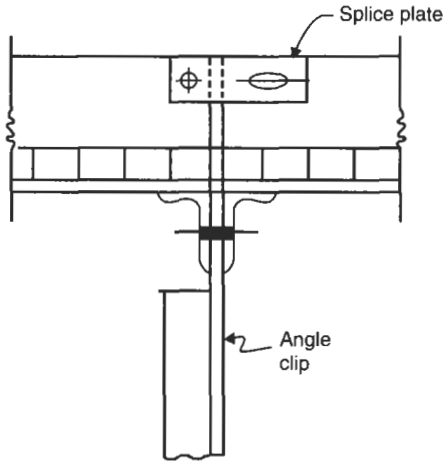

Maximum Length of Unsupported Toe Angle (Based on 105-psf Load and L6 × 3½ × 5/16)

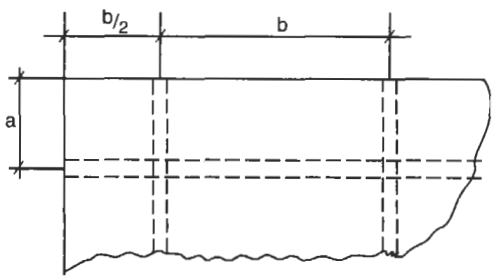

a (ft)	b (ft)	
	Grating	Check plate
<1	15	∞
1½	10	12
2	8	9
2½	6	6

Check of Toe Angle Frame

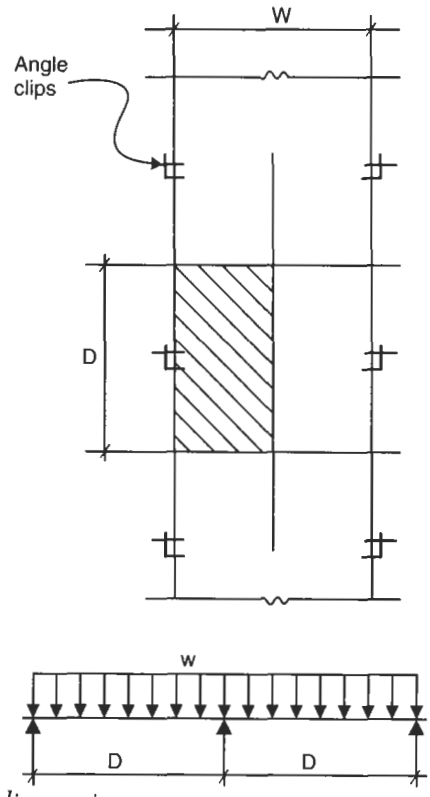

Check clip spacing:

$$P = D.L + L.L. = \text{psf}$$

$$w = \frac{WP}{2} \quad \frac{\text{lb}}{\text{ft}}$$

$$M = \frac{wD^2}{8} \quad \text{ft-lbs}$$

$$\sigma = \frac{12M}{Z} < 21.6\,\text{ksi}$$

Z = Section modulus of toe angle, in^3

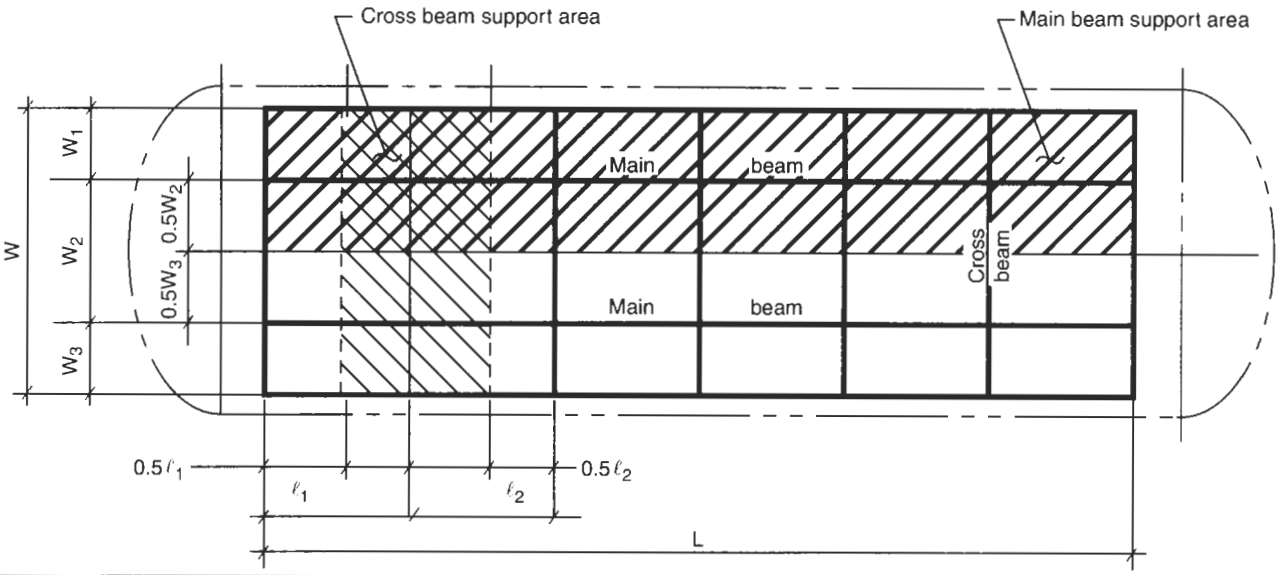

Notation

A = area, sq ft
p = unit load, psf
P = total load, lb
w = unit load on beam, lb/linear foot
R = reaction, lb
M = moment, in.-lb
d = deflection, in.
K = end connection coefficient, use 1.0
r = radius of gyration of column, in.
f_a = axial stress, psi
F_a = allowable compressive stress, psi

Calculations

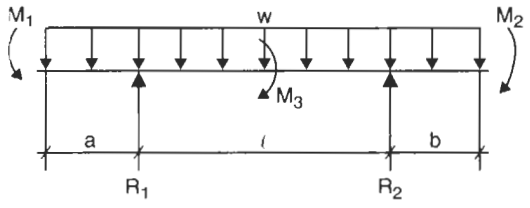

Main or Cross Beam

Main or Cross Beam

- *Area, A.*

$$A = (0.5w_2 + w_1)L$$

- *Load, P.*

$$P = Ap$$

- *Unit load on beam, w.*

$$w = \frac{P}{L}$$

$$R_1 = \frac{w(a+l)^2 - b^2}{2l}$$

$$M_1 = \frac{wa^2}{2}$$

$$M_2 = \frac{wb^2}{2}$$

$$M_3 = R_1\left(\frac{R_1}{2w} - a\right)$$

$$\delta_{end} = \frac{wa}{24EI}(l^3 - 6a^2l - 3a^3)$$

$$\delta_{center} = \frac{wl^2}{384EI}(5l^2 - 24a^2)$$

Notes

1. Maximum distance between cross beams is governed by one of two conditions:
   a. Maximum span of grating or checkered plate.
   b. Deflection/stress of toe angle. Ability of toe angle to carry the load.
2. Each beam supports the load from one-half the area between the adjacent beams.

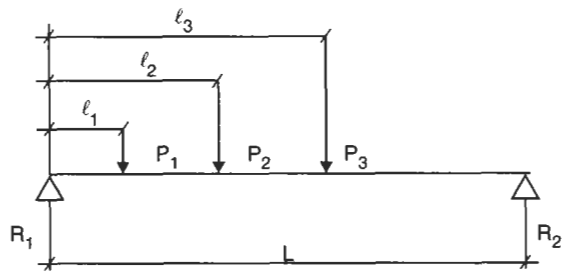

Beams—Multiple Loads

$$R_2 = \frac{l_1P_1 + l_2P_2 \cdots + \cdots l_nP_n}{L}$$

$$R_1 = \sum P_n - R_2$$

To find maximum moment:

1. Select maximum reaction.
2. Total all downward loads, starting from the reaction, until the value of the reaction is exceeded. This is the point where the maximum moment will occur.
3. The moments are equal to the right or left of that point. Sum the moments in either direction.

Design of Vessel Clips

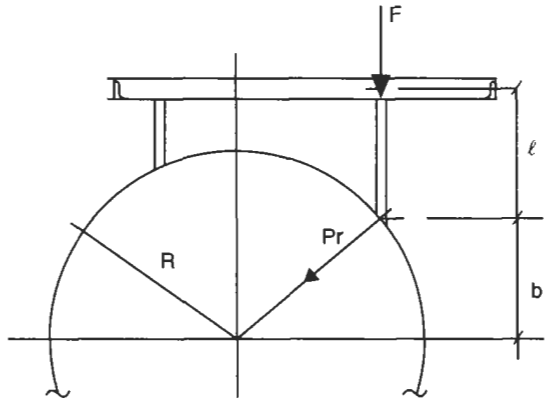

- *Slenderness ratio.*

$$\frac{kl}{r}$$

Use $k = 1.0$.

- *F = reaction from main beam columns.*
- *Allowable compressive stress, F_a, based on slenderness ratio.*
- *Axial stress, f_a.*

$$f_a = \frac{F}{A}$$

- *Check stress ratio.*

$$\frac{f_a}{F_a} < 0.15$$

- *Radial load in shell, P_r.*

$$P_r = \frac{bF}{R}$$

PROCEDURE 6-4

DESIGN OF PIPE SUPPORTS

Unbraced Pipe Supports

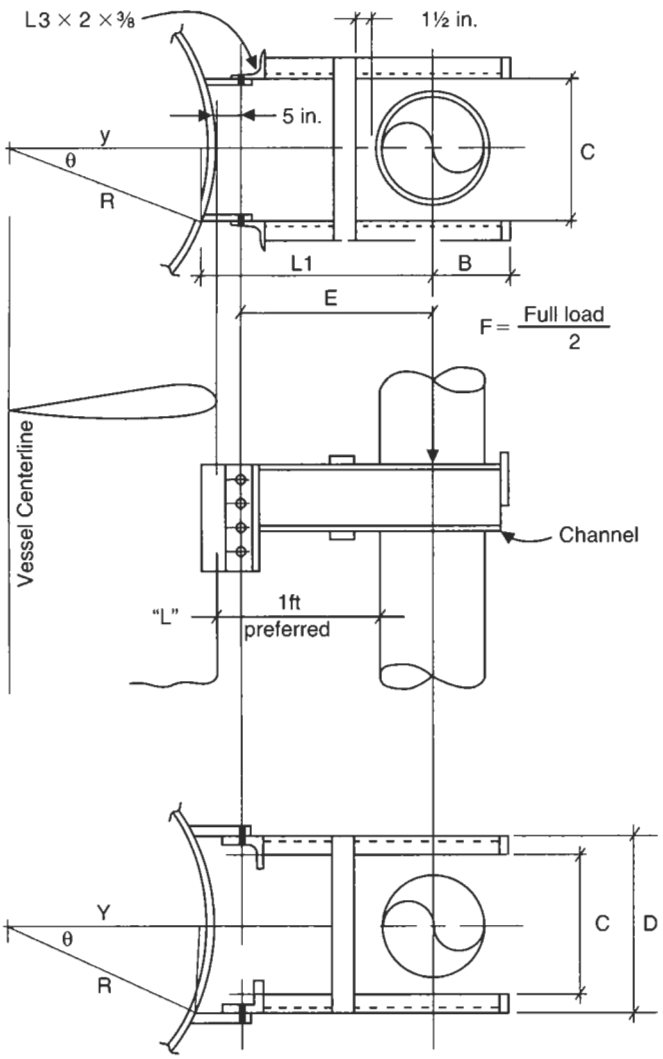

Alternate Case: Legs Turned In

Types of Brackets

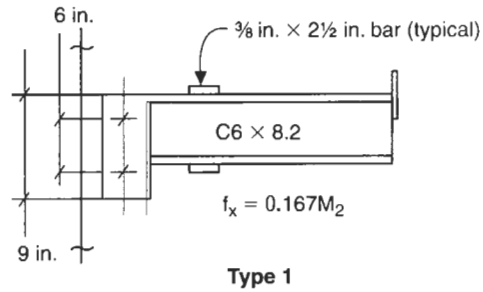

Type 1

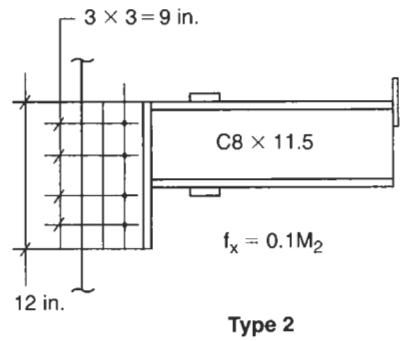

Type 2

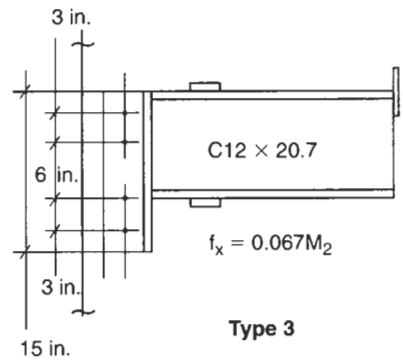

Type 3

Table 6-5
Pipe Support Dimensions

Dimension	Pipe Size											
	2 in.	3 in.	4 in.	6 in.	8 in.	10 in.	12 in.	14 in.	16 in.	18 in.	20 in.	24 in.
B	2.75	3.5	4.25	6	7.5	9	10.5	11.25	12.75	14	16	18
C	4	5	6.5	9	12	14	16	17	19	21	23	27
D—Type 1	7.75	8.75	10.25	12.75	15.75	17.75	19.75	20.75				
D—Type 2				13.5	16.5	18.5	20.5	21.5	23.5			
D—Type 3					18	20	22	23	25	27	29	33

Table 6-6
Weight of Pipe Supports, lb (Without Clips)

L Dimension	Support Type	Pipe Size									
		2 in.	3 in.	4 in.	6 in.	8 in.	10 in.	12 in.	14 in.	16 in.	18 in.
12 in.	1	12	13	15	18	22	25				
	2				22	27	31	35	37	41	45
	3					44	51	57	61	67	72
14 in.	1	15	16	18	21	25	28				
	2				26	31	35	39	41	45	49
	3					52	58	64	68	74	79
16 in.	1	18	19	20	24	28	31				
	2				30	35	39	43	45	49	51
	3					59	65	71	74	81	86
18 in.	1	20	21	23	26	31	34				
	2				34	39	43	46	49	53	56
	3					65	72	77	81	88	93
20 in.	1	23	24	26	29	33	36				
	2				38	42	46	50	53	57	60
	3					72	79	84	88	95	100

Kneebraced Pipe Supports

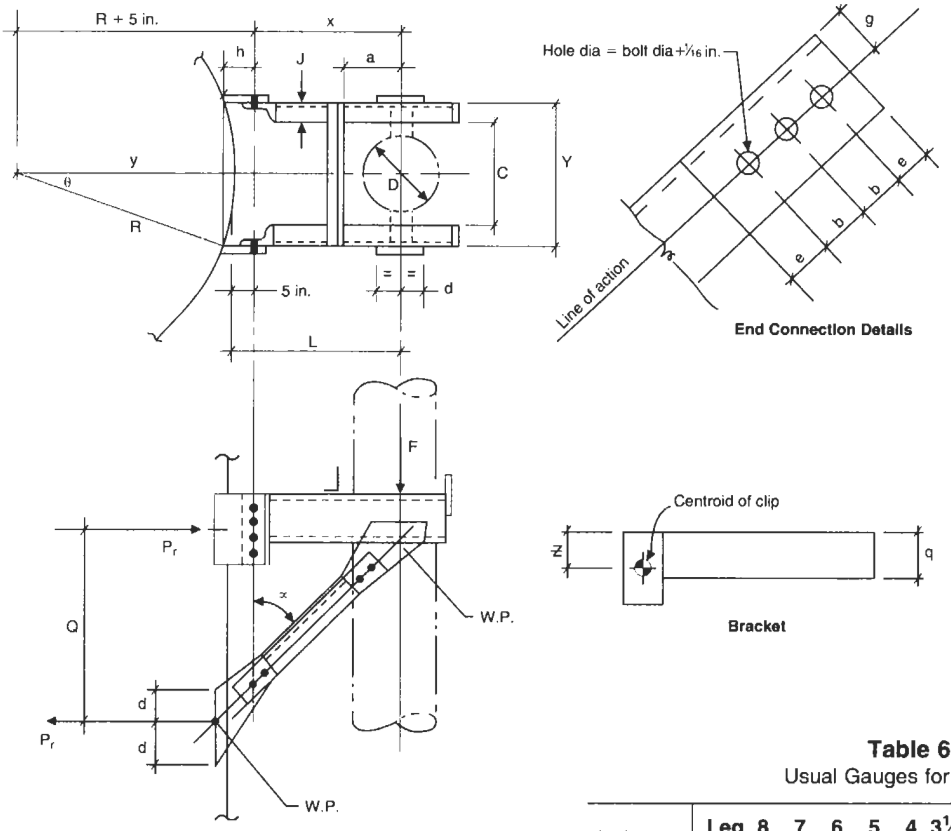

Table 6-7
Usual Gauges for Angles, in.

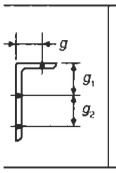

Leg	8	7	6	5	4	3½	3	2½	2	1¾	1½	1⅜	1¼	1
g	4½	4	3½	3	2½	2	1¾	1⅜	1⅛	1	⅞	⅞	¾	⅝
g_1	3	2½	2¼	2										
g_2	3	3	2½	1¾										

Dimensions

$$a = \frac{D}{2} + 3\,\text{in.}$$

$$Y = C + 2j + 1\,\text{in.}$$

$$x = L - 5\,\text{in.}$$

$$\theta = \arcsin\left(\frac{Y}{2R}\right)$$

$$y = R\,\text{Cos}\,\theta$$

$$h = (R + 5\,\text{in.}) - y$$

$$Q = (x + h) + (q - z)$$

Table 6-8
Kneebraced Pipe Support Dimensions

Allowable Load (kips)	Bracket Type	"L" Max	Angle Size	Bolt Qty & Size	b	e	d	j
12.5	1	36	2½ × 2 × ⅜	(2) ¾	2.5	1.25	2.5	1.92
17.5	1	36	3 × 2 × ⅜	(2) ⅞	2.75	1.5	3	1.92
24	1	36	3 × 2 × ⅜	(3) ⅞	2.75	1.5	3	1.92
21.5	1	54	3½ × 3 × ⅜	(2) 1	3	1.75	3.25	1.92
24	2	54	3½ × 3 × ⅜	(2) 1⅛	3.25	2	4	2.26
26.5	2	54	4 × 3 × ⅜	(2) 1¼	3.5	2.25	4.5	2.26
30	2	54	4 × 3 × ⅜	(3) 1	3	1.75	3.25	2.26
33.5	2	54	5 × 3 × ⅜	(3) 1⅛	3.25	2	4	2.26
37.5	2	54	5 × 3 × ⅜	(3) 1¼	3.5	2.25	4.5	2.26
26.5	3	66	6 × 3½ × ⅜	(2) 1¼	3.5	2.25	5.25	2.942
37.5	3	66	6 × 3½ × ⅜	(3) 1¼	3.5	2.25	5.25	2.942
26.5	3	75	6 × 4 × ⅜	(2) 1¼	3.5	2.25	5.25	2.942
37.5	3	75	6 × 4 × ⅜	(3) 1¼	3.5	2.25	5.25	2.942
50	3	75	6 × 4 × ⅜	(4) 1¼	3.5	2.25	5.25	2.942

High-Temperature Brackets

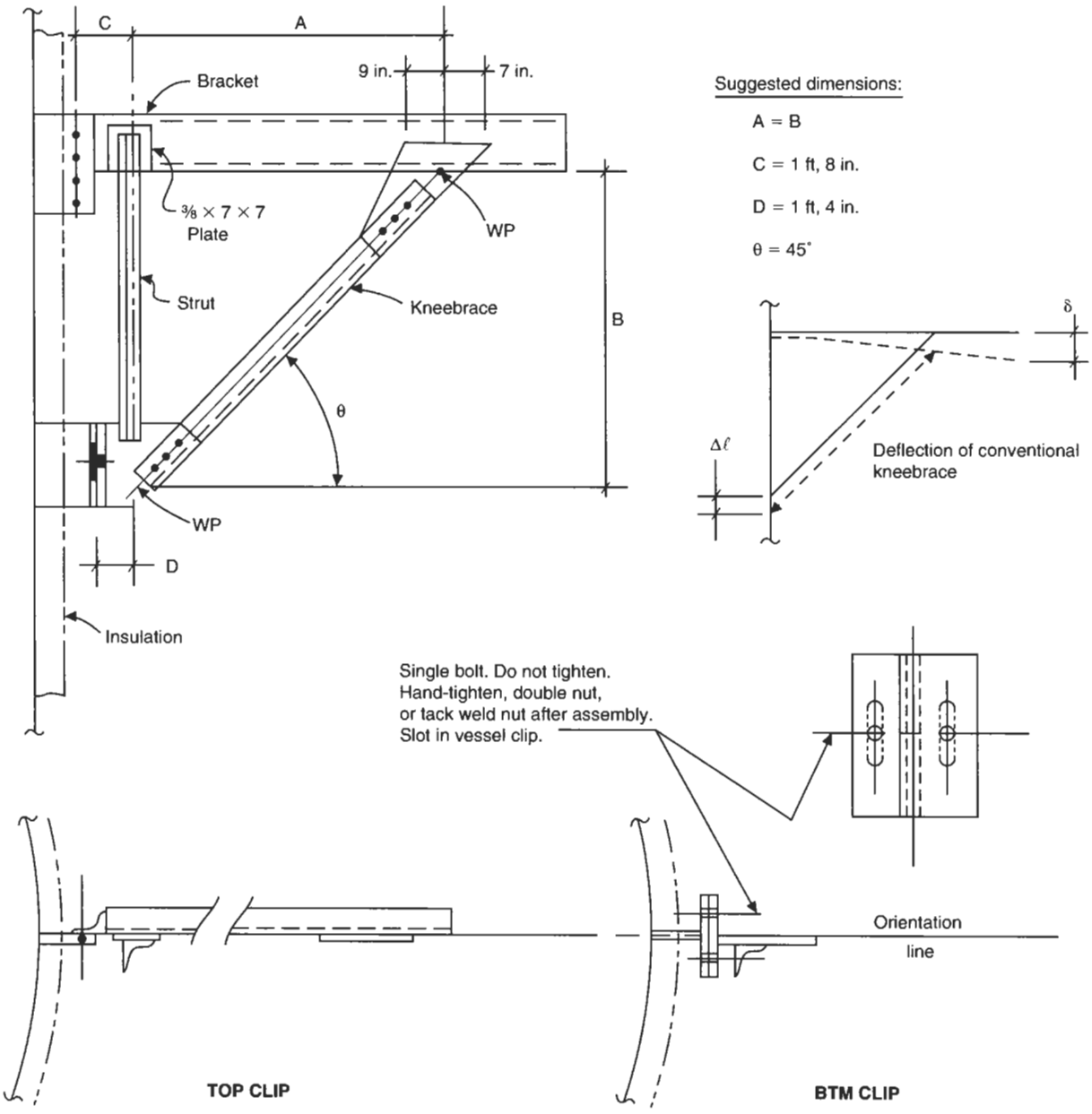

Design of Supports

Notation

A = cross-sectional area of kneebrace, $in.^2$
F = ½ of the total load on the support, lb
R_n = reaction, lb
P = compression load in kneebrace, lb
P_r = radial load in shell, lb
M_1 = moment at shell, in.-lb
M_2 = moment at line of bolts, in.-lb
r = radius of gyration, in.
N = number of bolts in clip
τ = shear stress, psi
E = modulus of elasticity, psi
I = moment of inertia, $in.^4$
Z = section modulus, $in.^3$
K = end connection coefficient
δ = deflection, in.
f_a = axial stress, psi
f_b = bending stress, psi
F_a = allowable axial stress, psi
F_b = allowable bending stress, psi

Cantilever-Type Brackets

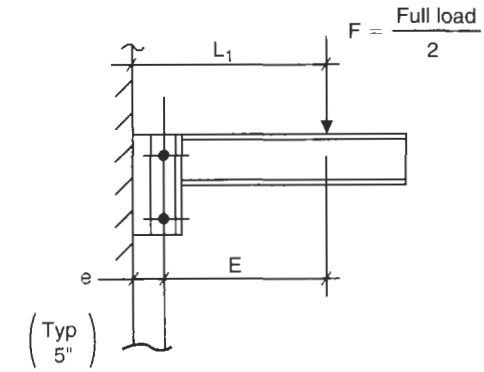

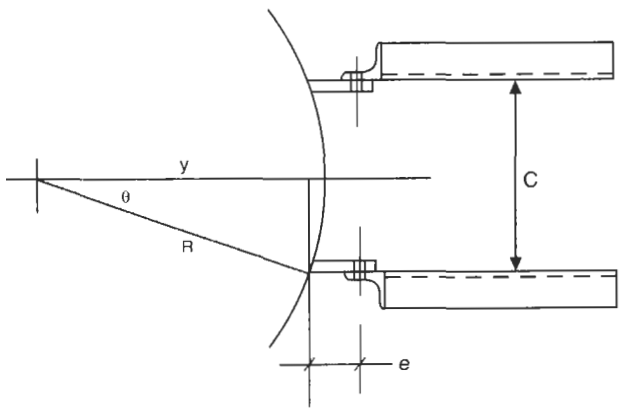

- *Dimensions.*

$$\sin\theta = \frac{C}{2R}$$

$$\therefore \theta =$$

$$y = R\cos\theta$$

$$L_1 = (R - y) + L + \frac{1}{2}\text{ pipe dia}$$

$$E = L_1 - [(R - y) + e]$$

- *Loads.*

$$M_1 = FL_1$$

$$M_2 = FE$$

- *Bracket check.*

$$f_b = \frac{M_1}{Z} < F_b$$

$$\delta = \frac{FL_1^3}{3EI}$$

- *Bolting check.*

Type	f_x
1	$0.167M_2$
2	$0.1M_2$
3	$0.067M_2$

$$f_y = \frac{F}{N}$$

$$f_r = \sqrt{f_x^2 + f_y^2}$$

Compare with allowable shear.

- *Check shell for longitudinal moment, M_2.*

Design of Kneebraced Supports

Case 1

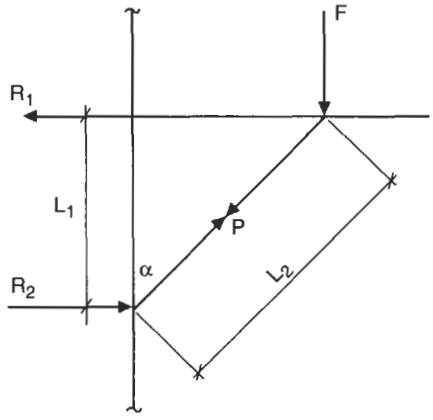

$$R_1 = R_2 = F \tan \alpha$$

$$P = \frac{F}{\cos \alpha} \qquad L_2 = \frac{L_1}{\cos \alpha}$$

$$f_a = \frac{P}{A} < F_a$$

$$\frac{KL_2}{r} \quad F_a$$

$$P_r = R_1 \cos \theta$$

$$\tau = \frac{P}{N} \text{ or } \frac{R_1}{N}$$

Case 2

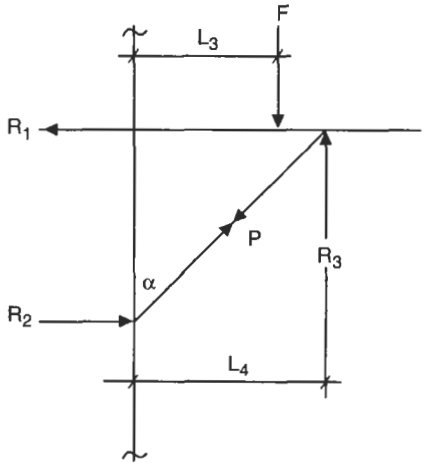

$$R_3 = \frac{L_3 F}{L_4}$$

$$R_1 = R_2 = R_3 \tan \alpha$$

$$P = \frac{R_3}{\cos \alpha}$$

$$f_a = \frac{P}{A} < F_a \qquad f_b = \frac{L_4 - L_3}{Z}$$

$$\frac{KL_2}{r} \quad F_a$$

$$\tau = \frac{P}{N} \text{ or } \frac{R_1}{N}$$

Case 3

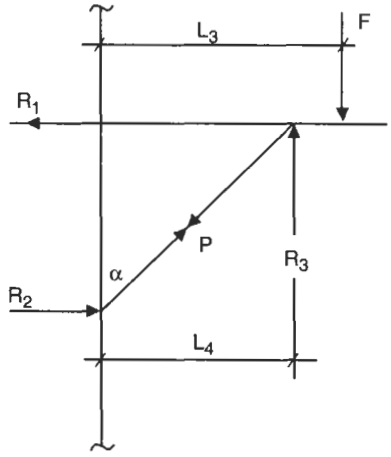

$$R_3 = \frac{L_3 F}{L_4}$$

$$R_1 = R_2 = R_3 \tan \alpha$$

$$P = \frac{R_3}{\cos \alpha}$$

$$f_a = \frac{P}{A} < F_a \qquad f_b = \frac{L_3 - L_4}{Z}$$

$$\frac{KL_2}{r} \quad F_a$$

$$\tau = \frac{P}{N} \text{ or } \frac{R_1}{N}$$

Alternate-Type Supports

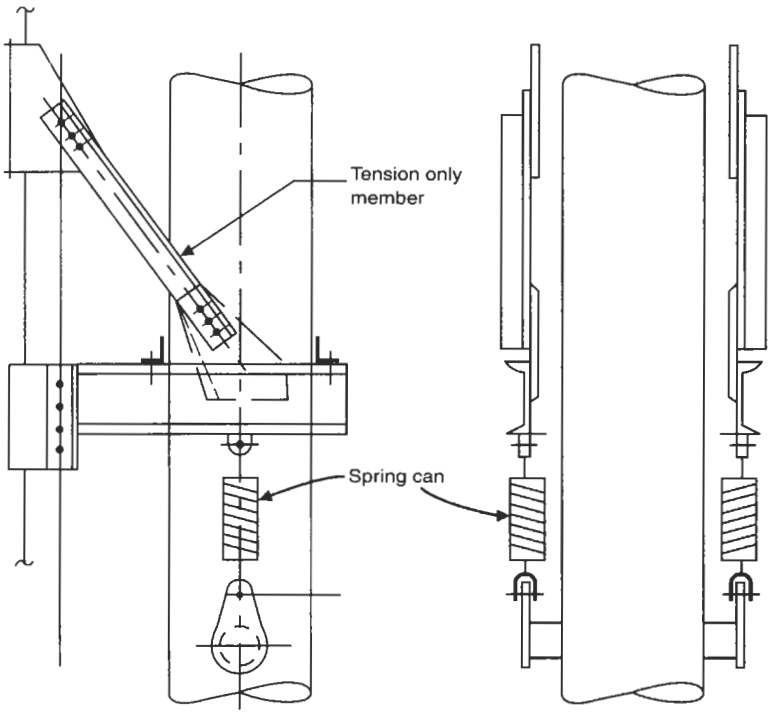

Inverted Support, Large Lines with Spring Hangers

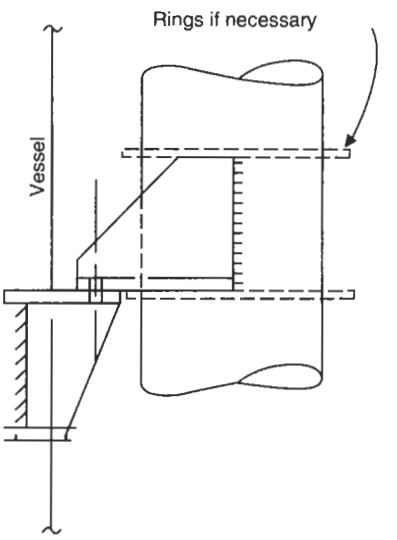

Pipe and Vessel Share Load to Reduce Load on Vessel Shell

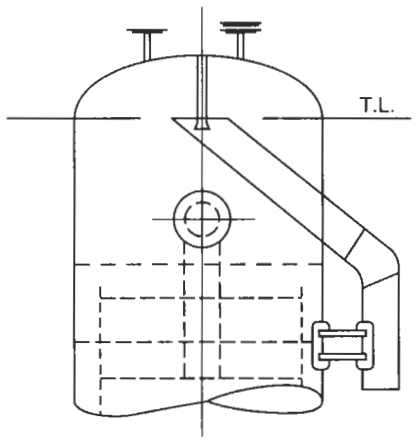

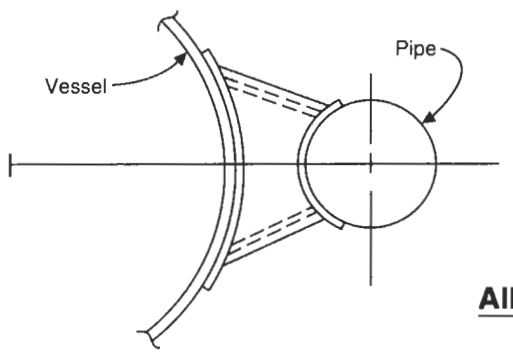

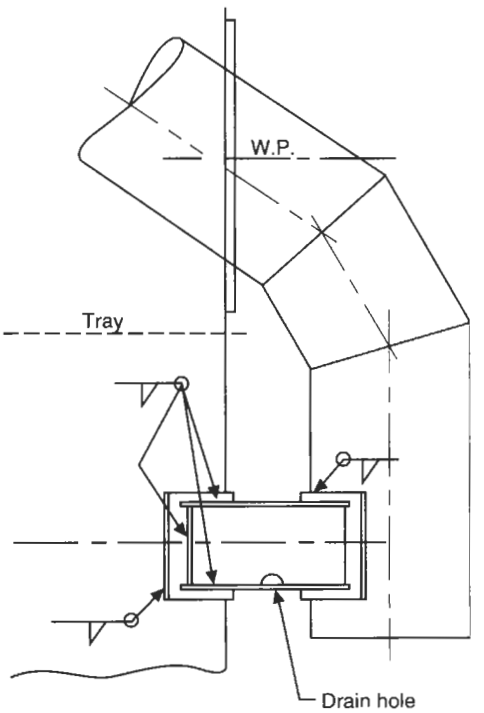

All Welded Integral Construction for Overhead Vapor Lines

Notes

1. Allowable deflection brackets should be limited to L/360.
2. Kneebracing should be used only if absolutely necessary.
3. Pipe support should be placed as close as possible to the nozzle to which it attaches. This limits the effect of differential temperature between the pipe and the vessel. If the line is colder than the vessel, the nozzle will tend to pick up the line. For the reverse situation (pipe hotter than vessel), the line tends to go into compression and adds load to the support.
4. The nozzle and the pipe support will share support of the overall line weight. Each will share the load in proportion to its respective stiffness. The procedure is to design the pipe support for the entire load, which is conservative. However, be aware that as the pipe support deflects, more of the load is transferred to the nozzle.
5. The pipe is normally supported by trunnions welded to the pipe. The trunnions can be shimmed to accommodate differences in elevation between the trunnions and the supports.
6. Design/selection of pipe supports:
   - Make preliminary selection of support type based on the sizing in the table.
   - Check allowable bolt loads per chart.
   - Check shell stresses via the applicable local load procedure.
7. The order of preference for overstressed supports, shells, or bolts is as follows:
   - Go to the next largest type of support.
   - If the loads in the bolts exceed that allowable, change the material or size of the bolts.
   - If the brackets are overstressed, increase the bracket size.
8. Use "high-temperature brackets" for kneebraced pipe supports or platform brackets when the design temperature of the vessel exceeds 650°F. This sliding support is utilized for hot, insulated vessels where the support steel is cold. This sliding support prevents the support from dipping as the vessel clips grow apart due to linear thermal expansion of the vessel while the kneebrace remains cold. This condition becomes more pronounced as the vessel becomes hotter and the distance between clips becomes greater.
9. Keep bolts outside of the insulation.
10. Vessel clip thickness should be $\frac{3}{8}$ in. for standard clips up to 650°F. Above 650°F, clips should be $\frac{1}{2}$ in. thick.
11. Bolt holes for Type 1, 2, or 3 supports should be $\frac{13}{16}$-in.-diameter holes for $\frac{3}{4}$-in.-diameter bolts.

PROCEDURE 6-5

SHEAR LOADS IN BOLTED CONNECTIONS

Table 6-9
Allowable Loads, in kips

Material	Size		5/8 in.	3/4 in.	7/8 in.	1 in.	1 1/8 in.	1 1/4 in.	1 3/8 in.	1 1/2 in.		
A-307	Single		3.07	4.42	6.01	7.85	9.94	12.27	14.8	17.7		
	Double		6.14	8.84	12.03	15.71	19.88	24.54	29.7	35.3		
A-325	Single		6.4	9.3	12.6	16.5	20.9	25.8	31.2	37.1		
	Double		12.9	18.6	25.3	33.0	41.7	51.5	62.4	74.2		

Values from AISC.

Cases of Bolted Connections

Case 1

n = no. of fasteners in a vertical row

m = no. of fasteners in a horizontal row = 2

I_p = polar moment of inertia about c.g. of fastener group: $I_x + I_y$

$$I_x = 2\left[\frac{nb^2(n^2-1)}{12}\right]$$

$$I_y = n\left[\frac{mD^2(m^2-1)}{12}\right]$$

$$f_x = \frac{(F\ell)(n-1)b}{2I_p}$$

$$f_y = \frac{F}{mn} + \frac{F\ell D}{2I_p}$$

$$f_r = \sqrt{f_x^2 + f_y^2}$$

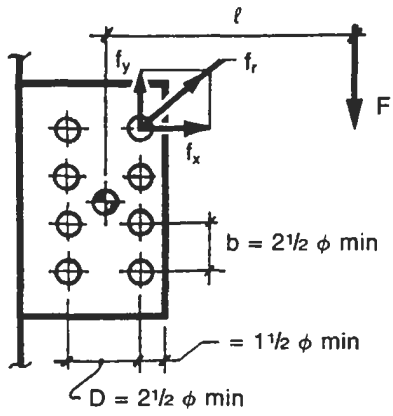

Figure 6-16. Longitudinal clip with double row of n bolts.

Case 2

$$f_x = \frac{F\ell}{e}$$

$$f_y = \frac{F}{2}$$

$$f_r = \sqrt{f_x^2 + f_y^2}$$

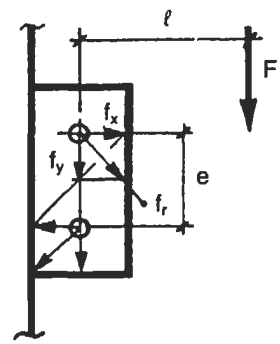

Figure 6-17. Longitudinal clip with two bolts.

Case 3

$$f = \frac{F\ell}{e}$$

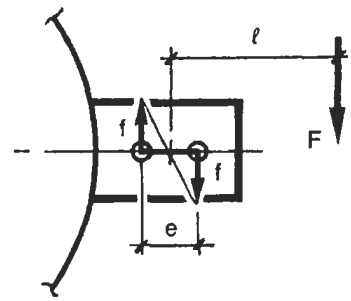

Figure 6-18. Circumferential clip with two bolts.

Case 4

$$f_x = x_n\left[\frac{Fl}{2(x_1^2 + x_2^2 + \ldots + x_n^2)}\right]$$

$$f_y = \frac{F}{n}$$

$$f_r = \sqrt{f_x^2 + f_y^2}$$

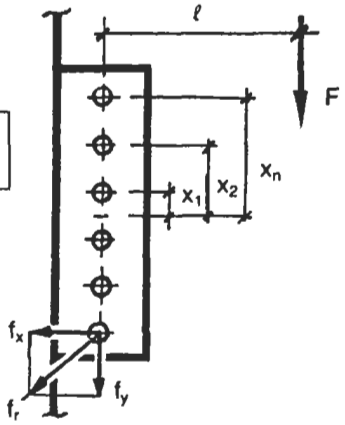

Figure 6-19. Longitudinal clip with single row of n bolts.

Case 5

$$f_x = \frac{Fl}{2b}$$

$$f_y = \frac{Fld}{2(b^2 + d^2)}$$

$$f_r = \sqrt{f_x^2 + f_y^2}$$

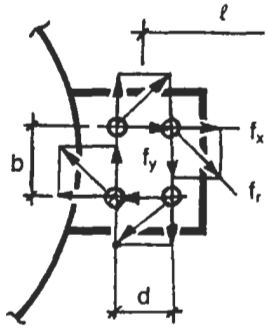

Figure 6-20. Circumferential clip with four bolts.

PROCEDURE 6-6

DESIGN OF BINS AND ELEVATED TANKS [3–9]

The definition of a "bulk storage container" can be quite subjective. The terms "bunkers," "hoppers," and "bins" are commonly used. This procedure is written specifically for cylindrical containers of liquid or bulk material with or without small internal pressures.

There is no set of standards that primarily applies to bins and since they are rarely designed for pressures greater than 15 psi, they do not require code stamps. They can, however, be designed, constructed, and inspected in accordance with certain sections of the ASME Code or combinations of codes.

When determining the structural requirements for bins, the horizontal and vertical force components on the bin walls must be computed. A simple but generally incorrect design method is to assume that the bin is filled with a fluid of the same density as the actual contents and then calculate the "equivalent" hydrostatic pressures. While this is correct for liquids, it is wrong for solid materials. All solid materials tend to bridge or arch, and this arch creates two force components on the bin walls.

The vertical component on the bin wall reduces the weight load on the material below, and pressures do not build up with the depth as much as in the case of liquids. Consequently, the hoop stresses caused by granular or powdered solids are much lower than for liquids of the same density. However, friction between the shell wall and the granular material can cause high longitudinal loads and even longitudinal buckling. These loads must be carefully considered in the case of a "deep bin."

In a "shallow bin," the contents will be entirely supported by the bin bottom. In a "deep bin" or "silo," the support will be shared, partly by the bottom and partly by the bin walls due to friction and arching of material.

Notation

A = cross-sectional area of bin, ft^2
A_r = area of reinforcement required, $in.^2$
A_a = area of reinforcement available, $in.^2$
A_s = cross-sectional area of strut, $in.^2$
e = common log 2.7183
C.A. = corrosion allowance, in.
E = joint efficiency, 0.35–1.0
F = summation of all vertical downward forces, lb
F_a = allowable compressive stress, psi
f = vertical reactions at support points, lb
h_i = depth of contents to point of evaluation, ft
K_1, K_2 = rankines factors, ratio of lateral to vertical pressure
M = overturning moment, ft-lb
N = number of supports

P = internal pressure, psi
p_n = pressure normal to surface of cone, psf
p_v = vertical pressure of contents, psf
p_h = horizontal pressure on bin walls, psf
Q = total circumferential force, lb
R_h = hydraulic radius of bin, ft
S = allowable tension stress, psi
T_1, T_{1s} = longitudinal force, lb/ft
T_2, T_{2s} = circumferential force, lb/ft
G = specific gravity of contents
θ = angle of repose of contents, degrees
ϕ = angle of filling, angle of surcharge, friction angle. Equal to θ for free filling or 0 if filled flush, degrees
β = angle of rupture, degrees
μ = friction coefficient, material on material
μ' = friction coefficient, material on bin wall
Δh = height of filling peak, depth of emptying crater, ft
C_s = a function of the area of shell that acts with strut to A_s

Weights

W = total weight of bin contents, lb
w = density of contents, lb/cu ft
W_T = total weight of bin and contents, lb
W_c = weight of cone and lining below elevation under consideration, lb
W_R = D.L. + L.L. of roof plus applied loads, lb (include weight of any installed plant equipment)
W_s = weight of shell and lining (cylindrical portion only), lb
$W_1 = W + W_c$
W_2 = weight of contents in cylindrical portion of bin, lb, $= \pi R^2 Hw$
W_3 = load caused by vertical pressure of contents, lb, $= p_v \pi R^2$
W_4 = portion of bin contents carried by bin walls due to friction, lb, $= W_2 - W_3$
$W_5 = W_R + W_4 + W_s$
$W_6 = W_T - W_c - W_{c1}$
W_7 = weight of bin below point of supports plus total weight of contents, lb
W_{c1} = weight of contents in bottom, lb

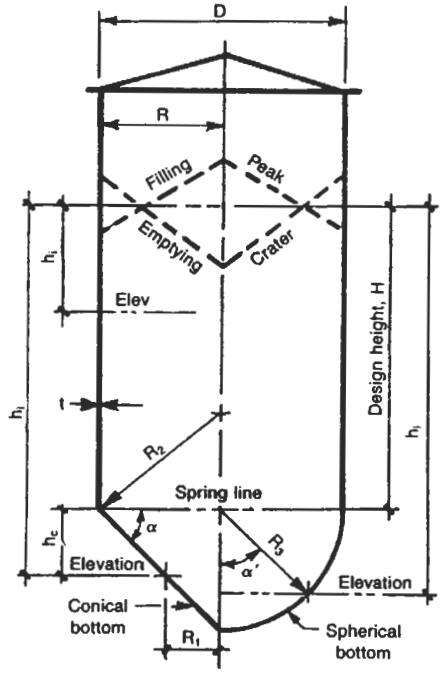

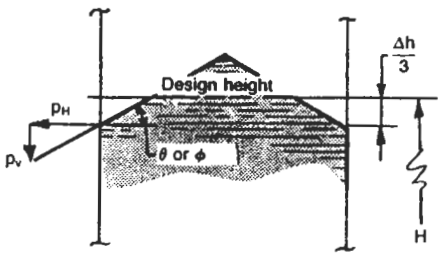

Filling peak

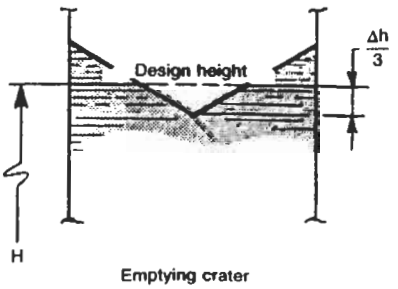

Emptying crater

Figure 6-21. Dimensional data and forces of bin or elevated tank.

Bins

1. *Determine if bin is "deep" or "shallow."* The distinction between deep and shallow bins is as follows:
   - In a shallow bin the plane of rupture emerges from the top of the bin.
   - In a deep bin the plane of rupture intersects the opposite bin wall below both the top of the bin and/or the maximum depth of contents.

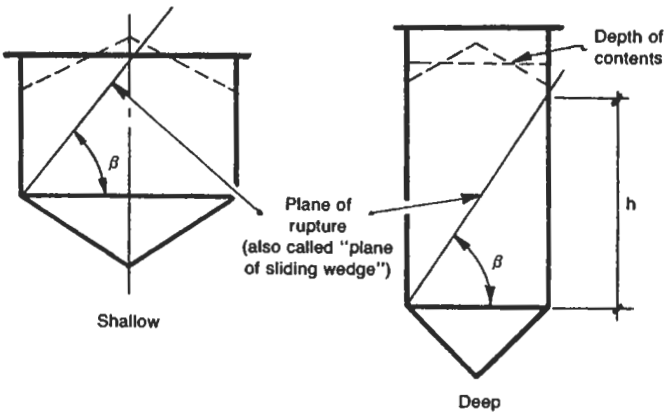

Figure 6-22. Examples illustrating the shallow vs. deep bin.

2. *Determine angle* β.

$$\tan \beta = \mu + \sqrt{\mu + \frac{1+\mu^2}{\mu+\mu'}}$$

If μ and μ' are unknown, compute β as follows:

$$\beta = \frac{90+\theta}{2}$$

and $h = D \tan \beta$.

If h is smaller than the straight side of the bin and below the design depth of the contents, the bin is assumed to be "deep" and the silo theory applies. If h is larger than the straight side of the bin or greater than the design depth of the contents, then the bin should be designed as "shallow." This design procedure is also known as the "sliding wedge" method.

Liquid-Filled Elevated Tanks

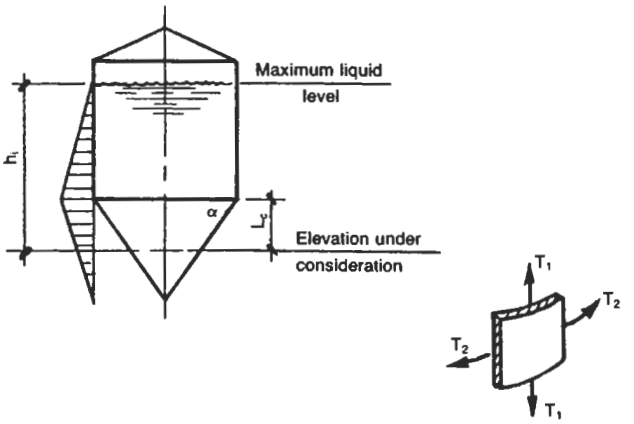

Figure 6-23. Dimensions and loads for a liquid-filled elevated tank.

- *Shell (API 650 & AWWA D100).*

$$t = \frac{2.6DHG}{SE} + C.A.$$

For A-36 material:

API 650: S = 21,000 psi

AWWA D100: S = 15,000 psi

- *Conical bottom (Wozniak).*

At spring line,

$$T_1 = \frac{wR}{2\sin\alpha}\left(H + \frac{R\tan\alpha}{3}\right)$$

$$T_2 = \frac{wRH}{\sin\alpha}$$

At any elevation below spring line,

$$T_1 = \frac{w}{2\sin\alpha}\left(R - \frac{h_c}{\tan\alpha}\right)\left(H + \frac{2h_c}{3} + \frac{R\tan\alpha}{3}\right)$$

$$T_2 = \frac{wh_i}{\sin\alpha}\left(R - \frac{h_c}{\tan\alpha}\right)$$

$$t_c = \frac{(T_1 \text{ or } T_2)}{12SE\sin\alpha} + C.A.$$

- *Spherical bottom (Wozniak).*

  At spring line,

$$T_1 = wR_3\left[\frac{H}{2} + \frac{R_3}{3}\right]$$

$$T_2 = wR_3\left[\frac{H}{2} - \frac{R_3}{3}\right]$$

  At bottom (max. stress),

$$T_1 = T_2 = \frac{wh_iR_3}{2}$$

$$t_s = \frac{(T_1 \text{ or } T_2)}{12SE} + \text{C.A.}$$

- *Ring compression at junction (Wozniak).*

$$Q = \frac{R^2w}{2\tan\alpha}\left(H + \frac{R\tan\alpha}{3}\right)$$

Shallow, Granular- or Powder-Filled Bin

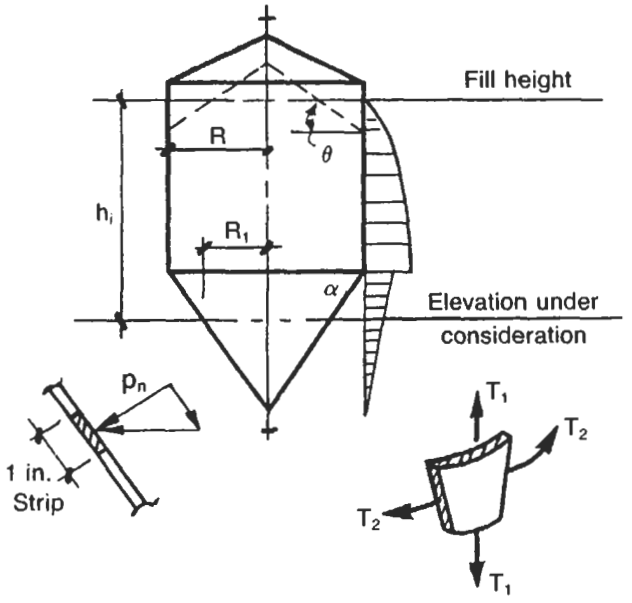

Figure 6-24. Dimensions and forces for a shallow bin.

- *Cylindrical Shell (Lambert).*

$$p_v = wh_i$$

  = maximum at depth H

$$K = K_1 \text{ or } K_2$$

$$P_h = p_vK\cos\phi$$

  T_1 = compression only—from weight of shell, roof, and wind loads

Hoop tension, T_2, will govern design of shell for shallow bins

$$T_2 = p_hR$$

$$t = \frac{T_2}{12SE} + \text{C.A.}$$

- *Conical bottom (Ketchum).*

$$p_v = wh_i$$

  Maximum at depth H =

$$p_n = \frac{p_v\sin^2(\alpha+\theta)}{\sin^3\alpha\left[1 + \frac{\sin\theta}{\sin\alpha}\right]^2}$$

$$W_1 = W + W_c$$

$$T_1 = \frac{W_1}{2\pi R_1\sin\alpha}$$

$$T_2 = \frac{p_nR_1}{\sin\alpha}$$

$$t_c = \frac{T_1 \text{ or } T_2}{12SE} + \text{C.A.}$$

- *Spherical bottom (Ketchum).*

$$T_1 = T_2 = \frac{W_1}{2\pi R_3\sin^2\alpha'}$$

  Note: At $\alpha' = 90°$, $\sin^2\alpha' = 1$.

$$t_s = \frac{T_1}{12SE} + \text{C.A.}$$

- *Ring compression (Wozniak).*

$$Q = T_1R\cos\alpha$$

Deep Bins (Silo)—Granular/Powder Filled

- *Shell (Lambert).*

  Hydraulic radius

  $$R_h = \frac{R}{2}$$

- *Pressures on bin walls, p_v and p_h.*

  $K = K_1$ or K_2

  $$e^{\left(\frac{-K\mu' h_i}{R_h}\right)}$$

  e = common log 2.7183

  $$p_v = \frac{wR_h}{\mu' K}\left[1 - e^{\left(\frac{-K\mu' h_i}{R_h}\right)}\right]$$

  $$ph = p_v K$$

- *Weights.*

  $$W_2 = \pi R^2 Hw$$

  $$W_3 = p_v \pi R^2$$

  $$W_4 = W_2 - W_3$$

  $$W_5 = W_4 + W_R + W_s$$

  $W_R =$

  $W_s =$

- *Forces.*

  $$T_1 = \frac{-W_5}{\pi D} - \frac{48M}{\pi D}$$

  $$T_2 = p_h R$$

  Note: For thin, circular steel bins, longitudinal compression will govern. The shell will fail by buckling from vertical drag rather than bursting due to hoop tension.

- *Maximum allowable compressive stress (Boardman formula).*

  $$F_a = 2 \times 10^6 \left(\frac{t}{R}\right)\left(1 - \frac{100t}{3R}\right)$$

  $F_a = 10{,}000$ psi maximum

- *Thickness required shell, t.*

  $$t = \frac{T}{12F_a}$$

- *Conical bottom (Ketchum).*

  Note: Design bottoms to support full load of contents. Vibration will cause lack of side-wall friction.

  At spring line,

  $$p_v = wH$$

  $$p_n = \frac{p_v \sin^2(\alpha + \theta)}{\sin^3\alpha\left[1 + \frac{\sin\theta}{\sin\alpha}\right]^2}$$

  $$W_1 = W + W_c$$

  $$T_1 = \frac{W_1}{2\pi R \sin\alpha}$$

  $$T_2 = \frac{p_n R}{\sin\alpha}$$

  $$t = \frac{(T_1 \text{ or } T_2)}{12SE} + \text{C.A.}$$

- *Spherical bottom (Ketchum).*

  At spring line,

  $$T_1 = T_2 = \frac{W_1}{2\pi R_3}$$

  $$t = \frac{T_1}{12SE} + \text{C.A.}$$

- *Ring compression (Wozniak).*

  $$Q = T_1 R \cos\alpha$$

Bins and Tanks with Small Internal Pressures

- *Pressures.*

P_1 = pressure due to gas pressure

P_2 = pressure due to static head of liquid

$$P_2 = \frac{wH}{144}$$

P_3 = pressure due to solid material

$$P_3 = \frac{wHK\cos\phi}{144}$$

P = total pressure

$P = P_1 + P_2$

or

$P_1 - P_3 =$

- *Shell (API 620).*

$F = W_T$

$W_6 = W_T - W_c - W_{c1}$

$A = \pi R^2$

$$T_{1s} = \frac{R}{2}\left(P + \frac{-W_6 + F}{A}\right)$$

$T_{2s} = PR$

$$t = \frac{(T_{1s} \text{ or } T_{2s})}{SE} + C.A.$$

- *Conical bottom (API 620).*

$$T_1 = \frac{R}{2\cos\alpha}\left(P + \frac{-W_6 + F}{A}\right)$$

$$T_2 = \frac{PR}{\sin\alpha}$$

$$t_c = \frac{(T_1 \text{ or } T_2)}{SE} + C.A.$$

- *Ring compression at spring line, Q (API 620).*

$W_h = 0.6\sqrt{R_2(t_c - C.A.)}$

$W_c = 0.6\sqrt{R(t - C.A.)}$

$Q = T_2W_h + T_{2s}W_c - T_1R_2\cos\alpha$

Design of Compression Ring

Per API 620 the horizontal projection of the compression ring juncture shall have a width in a radial direction not less than 0.015 R. The compression ring may be used as a balcony girder (walkway) providing it is at least 3 ft-0 in. wide.

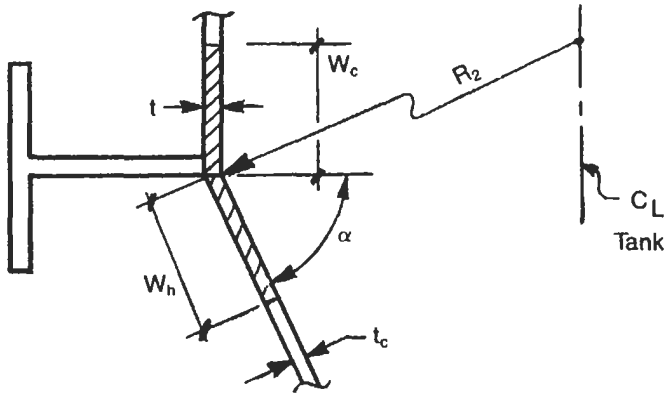

Figure 6-25. Dimensions at junction of cone and cylinder.

$$R_2 = \frac{R}{\sin\alpha}$$

$W_h = 0.6\sqrt{R_2(t_c - C.A.)}$

$W_c = 0.6\sqrt{R(t - C.A.)}$

Q = from applicable case =

$$A_r = \frac{Q}{S}$$

$A_a = W_ct + W_ht_c$

- *Additional area required.*

$A_r - A_a =$

Struts

Struts are utilized to offset unfavorable high local stresses in the shell immediately above lugs when either lugs or rings are used to support the bin. These high localized stresses may cause local buckling or deformation if struts are not used.

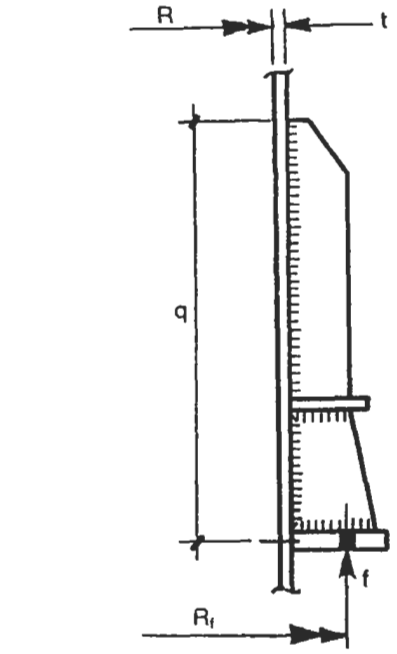

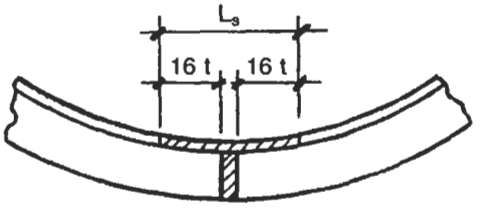

Single strut

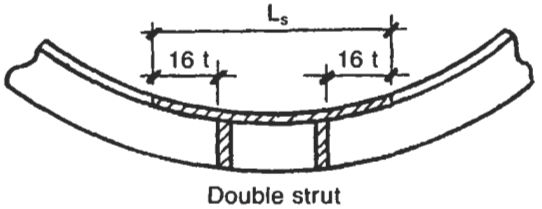

Double strut

Figure 6-26. Dimensions and arrangement of single and double struts.

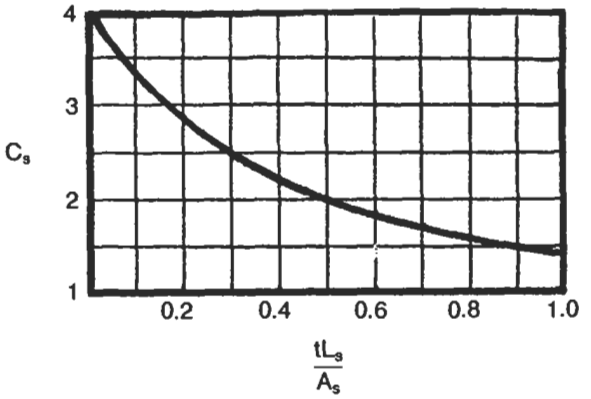

Figure 6-27. Graph of function C_s.

- *Height of struts required, q.*

$$q = \frac{\pi R}{N}$$

- *Strut cross-sectional area required, A_s.*

$$A_s = \frac{fC_s}{S}$$

$$\text{where } f = \frac{W_7 R_f + 2M}{NR_f}$$

W_7 = weight of bin below point of supports plus total weight of contents, lb

The total cross-sectional area of single or double struts may be computed by this procedure. To determine C_s assume a value of A_s and a corresponding value of C_s from Figure 6-27. Substitute this value of C_s into the area equation and compute the area required. Repeat this procedure until the proposed A_s and calculated A_s are in agreement.

Supports

Bins may be supported in a variety of ways. Since the bottom cone-cylinder intersection normally requires a compression ring, it is common practice to combine the supports with this ring. This will take advantage of the local stiffness and is convenient for the support design.

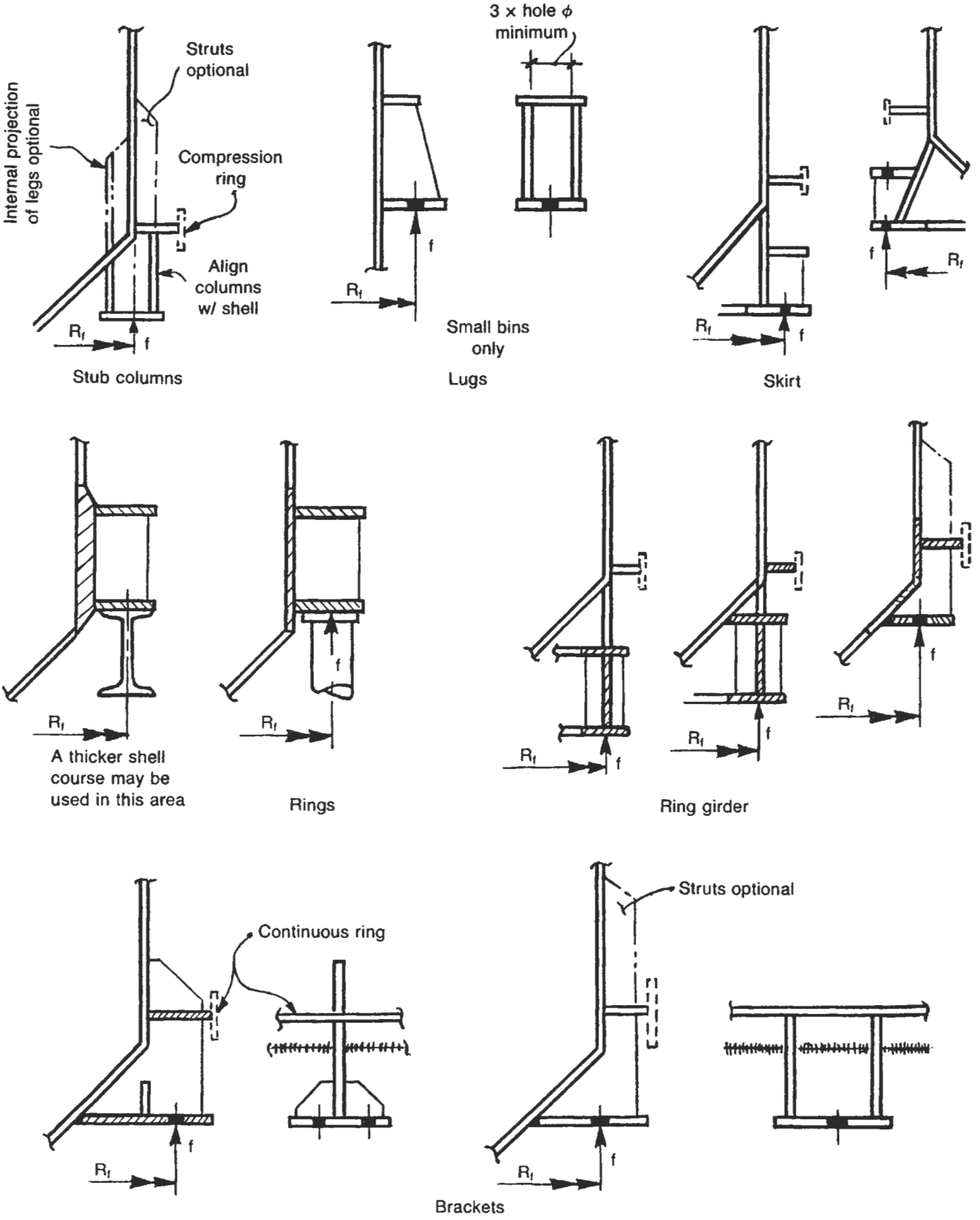

Figure 6-28. Typical support arrangements for bins and elevated tanks.

Table 6-10
Material Properties

Material	Density w	Angle of Repose θ	Contents on Contents μ	Coefficients of Friction: μ' – Contents on Wall, On Steel μ'	On Steel ϕ	On Concrete μ'	On Concrete ϕ
Portland cement	90	39°	0.32	0.93		0.54	
Coal (bituminous)	45–55	35°	0.70	0.59	25	0.70	35
Coal (anthracite)	52	27°	0.51	0.45	22	0.51	27
Coke (dry)	28	30°	0.58	0.55	20	0.84	20
Sand	90–110	30°–35°	0.67	0.60	20	0.58	30
Wheat	50–53	25°–28°	0.47	0.41		0.44	
Ash	45	40°	0.84	0.70	25	0.70	35
Clay—dry, fine	100–120	35°	0.70	0.70			
Stone, crushed	100–110	32°–39°	0.70	0.60			
Bauxite ore	85	35°	0.70	0.70			
Corn	44	27.5°	0.52	0.37		0.42	
Peas	50	25°	0.47	0.37		0.44	

If μ' is unknown it may be estimated as follows:
- Mean particle diameter < 0.002 in., $\tan^{-1}\mu' = \theta$.
- Mean particle diameter > 0.008 in., $\tan^{-1}\mu' = 0.75\ \theta$.

Table 6-11
Rankine Factors K_1 and K_2

θ	K_1	Values of K_2 for angles ϕ: 10°	15°	20°	25°	30°	35°	40°	45°
10°	0.7041	1.0000							
12°	0.6558	0.7919							
15°	0.5888	0.6738	1.0000						
17°	0.5475	0.6144	0.7532						
20°	0.4903	0.5394	0.6241	1.0000					
22°	0.4549	0.4958	0.5620	0.7203					
25°	0.4059	0.4376	0.4860	0.5820	1.0000				
27°	0.3755	0.4195	0.4428	0.5178	0.6906				
30°	0.3333	0.3549	0.3743	0.4408	0.5446	1.0000			
35°	0.2709	0.2861	0.3073	0.3423	0.4007	0.5099	1.0000		
40°	0.2174	0.2282	0.2429	0.2665	0.3034	0.3638	0.4549	1.0000	
45°	0.1716	0.1792	0.1896	0.2058	0.2304	0.2679	0.3291	0.4444	1.0000

K_1, no surcharge

$$K_1 = \frac{p_h}{p_v} = \frac{1 - \sin\theta}{1 + \sin\theta} =$$

K_2, with surcharge

$$K_2 = \frac{\cos\phi - \sqrt{\cos^2\phi - \cos^2\theta}}{\cos\phi + \sqrt{\cos^2\phi - \cos^2\theta}} =$$

Notes

1. Rankine factors K_1 and K_2 are ratios of horizontal to vertical pressures. These factors take into account the distribution of forces based on the filling and emptying properties of the material. If the filling angle is different from the angle of repose, then K_2 is used. Remember, even if the material is not heaped to begin with, a crater will develop when emptying. The heaping, filling peak, and emptying crater all affect the distribution of forces.
2. Supports for bins should be designed by an appropriate design procedure. See Chapter 3.
3. In order to assist in the flow of material, the cone angle should be as steep as possible. An angle of 45° can be considered as minimum, 50°–60° preferred.
4. While roofs are not addressed in this procedure, their design loads must be considered since they are translated to the shell and supports. As a minimum, allow 25 psf dead load and 50–75 psf live load plus the weight of any installed plant equipment (mixers, conveyors, etc.).
5. Purging, fluidizing techniques, and general vibration can cause loss of friction between the bin wall and the contents. Therefore its effect must be considered or ignored in accordance with the worst situation: in general, added to longitudinal loads and ignored for circumferential loads.
6. Surcharge: Most bunkers will be surcharged as a result of the normal filling process. If the surcharge is taken into account, the horizontal pressures will be overestimated for average bins. It is therefore more economical to assume the material to be flat and level at the mean height of the surcharge and to design accordingly. Where the bin is very wide in relation to the depth of contents the effects of surcharging need to be considered.

PROCEDURE 6-7

AGITATORS/MIXERS FOR VESSELS AND TANKS

Mixing is defined as the intermingling of particles that produce a uniform product. Hydraulically, mixers behave like pumps. Mixing applications can be either a batch or a continuous process. Although the terms *agitation* and *mixing* are often used interchangeably, there is a technical difference between the two.

Agitation creates a flow or turbulence as follows:

- Mild agitation performs a blending action.
- Medium agitation involves a turbulence that may permit some gas absorption.
- Violent agitation creates emulsification.

Mechanical mixers are used as follows:

- To mix two or more nonhomogeneous materials.
- To maintain a mixture of materials that would separate if not agitated.
- To increase the rate of heat transfer between materials.

The mechanical mixer usually consists of a shaft-mounted impeller connected to a drive unit. Mechanical mixers can be as small as ¼ hp or as large as 200 hp for some gear-driven units. Power consumption over time determines the efficiency and economy of a mixing process. Top-mounted mixers can be located on center (VOC), off center (VOFC), or angled off center (AOC). Mixers on center require baffles.

If the ratio of liquid height to vessel diameter is greater than 1.25, then multiple impellers are recommended. Ratios of 2:1 and 3:1 are common in certain processes. A common rule of thumb is to use one impeller for each diameter of liquid height.

Mixer applications are designed to achieve one of the following:

- *Blending:* combines miscible materials to form a homogeneous mixture.
- *Dissolving:* the dissipation of a solid into a liquid.
- *Dispersion:* the mixing of two or more nonmiscible materials.
- *Solid suspension:* suspends insoluble solids within a liquid.
- *Heat exchange:* promotes heat transfer through forced convection.
- *Extraction:* separation of a component through solvent extraction.

Mounting

Top-entering units can generally be used on all applications. Side-entering units are usually used for low speed, mild blending, and tank cleaning operations. The most efficient mounting is angled off center (AOC).

Tank Baffles

Antiswirl baffles are required in most larger industrial fluid-mixing operations. Baffles are used for center-shaft, top-mounted mixers to prevent vortexing. Baffles also promote top-to-bottom turnover and represent good mixing practice. The most usual arrangement is to have four baffles spaced at 90°. For viscosities up to 500 centipoises, baffles can be mounted directly to the wall. For use in higher-viscosity material or in any mixing application where solids can build up or where other harmful effects develop when the baffle attaches to the wall, the baffles should be spaced off of the wall. Normal spacing is 25% of the actual baffle width. Above 10,000 cP, baffles should be mounted at least 1½ in. off the wall. Above 20,000 cP, no baffles are typically required. Horizontal tanks do not usually require baffles. Baffles should be selected for the minimum viscosity that will occur during a mixing cycle.

As liquid viscosities go up, the need for baffles—and thus the baffle width—decreases. The industrial use of vessels without baffles is limited because unbaffled systems give poor mixing.

Baffle widths and the wall clearance depend on the viscosity of the liquid being mixed:

Viscosity, cP	Baffle Width, B	Off Wall, Bc
Waterlike	0.083 D	0.021 D
5000	0.056 D	0.014D
10,000	0.042 D	0.011 D
20,000	0.021 D	0.005 D

Impellers

Impellers come in the following types:

- Paddle.
- Propeller.
- Anchor.
- Turbine.
- Ribbon.

Paddle-type impellers are the simplest and lowest cost impellers, but they have small pumping capacity. They have very low axial flow, hence the pitched flat blade version is normally used for low-viscosity materials. The ratio of blade diameter to vessel diameter is usually $\frac{1}{3}$ to $\frac{2}{3}$. A radial flow impeller is used for high shear.

Propeller types pump liquid. Every revolution of a square pitch prop discharges a column of liquid approximately equal to the diameter of the propeller. The flow is axial. Such pumps are used primarily for high-speed applications and side-entry mixers. Duel propellers are used on vessels with H/D ratios greater than 1. The axial flow decreases mix time. They are heavier and cost more than pitched-blade turbines. Propeller-to-vessel-diameter ratio is usually $\frac{1}{3}$. A propeller-type impeller is used for high flow.

Anchor-type impellers rotate slowly and have a large surface area. This makes them ideal for batch applications in higher-viscosity materials.

Turbines are always mounted vertically. They are used at low speed where the application requires greater shear than pumping and higher horsepower per unit volume. There are two basic forms of turbines, the flat-blade radial-discharging type and the pitched-blade axial-thrust type. All others are modifications of these basic types. The ratio of blade diameter to vessel diameter is usually $\frac{1}{3}$.

Flat-blade turbines pump liquid outward by centrifugal force. Liquid that is displaced by the blade is replaced by flow from the top and bottom. Suction comes from the center, and delivery is on the circumference of the blade. The primary flow is radial. This is the most widely used type of mechanical agitator. The number of blades vary from 4 to 12. This turbine is used primarily for liquid–liquid dispersion. Turbines with curved blades are used for higher-viscosity materials.

The pitched-blade turbine produces a combination of axial and radial flow. The purpose of pitching the blade is to increase radial flow. Blades can be sloped anywhere from 0° to 90°, but 45° is the commercial standard.

Notes

1. All mixers/agitators rotate clockwise.
2. In general, agitators are sized on the basis of the required torque per unit volume. Other factors that affect size and torque are:
   - Viscosity > 100 cP (viscosity can affect blend times).
   - Critical speeds.
   - Tip speed.
   - Impeller diameter.
   - Required degree of agitation.
3. Each shaft is designed for mechanical loads and critical shaft speed. Motor size and shaft design are related. A larger shaft to take the torque will require more horsepower to eliminate wobble.
4. To prevent solid buildup on the bottom, a radial-blade impeller may be used. If elected, then place the blade one blade width off the bottom.
5. Power consumption:
   - Operating speed is back-calculated to ensure delivery of the proper power for a given impeller diameter.
   - The speed and horsepower define the torque required for the system. The torque in turn sets the shaft size and gear box size.
   - Impeller power consumption determines the horsepower and impeller diameter required for a given mixing process.
6. Mixing parameters:
   - Shaft angle.
   - Time.
   - Impeller type and diameter.
   - RPM (pumping capacity).
   - Power.
   - Viscosity, specific gravity.
7. A steady rest bearing may be utilized at the bottom of the tank if the mixing application allows.
8. Other applicable data:
   - Types of seals or packing.
   - Metallurgy.
   - Drain location.
   - Manway size.
   - Indoor/outdoor.
   - Mixer/agitator run times.
   - Head room required above tank.

Vessels with Agitators or Mixers

Notation

H_p = motor horsepower
N = impeller RPM
D = vessel diameter, in.
d = impeller diameter, in.
B = baffle width, in.
B_c = baffle off-wall distance, in.

- *Force on baffle, F.*

$$F = \frac{(56{,}800H_P)}{2N[D - B - (2B_c)]}$$

- *Force per unit area, F_u.*

$$F_u = \frac{F}{Bh}$$

- *Typical ratios.*

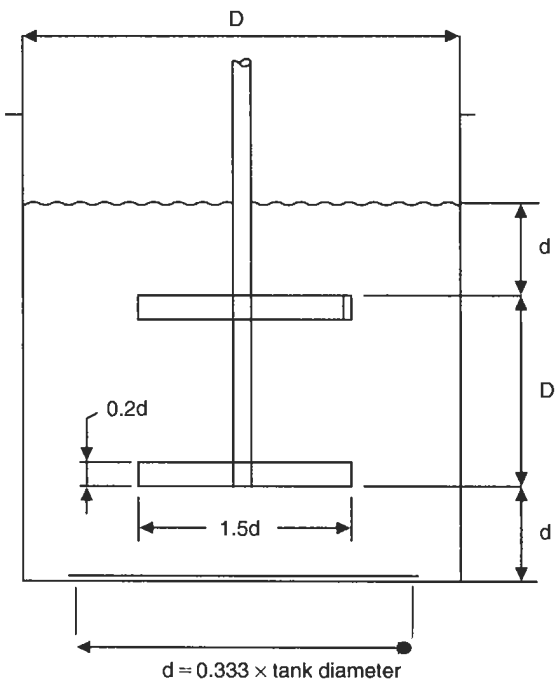

Use wear plate with pitched or propeller blades and suspended solids.

Types of Mixers

Type 1: Vertical On Center (VOC)

- Requires baffles.

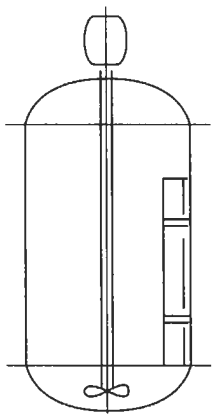

Type 2: Vertical Off Center (VOFC)

- Least effective.
- Poor mixing.

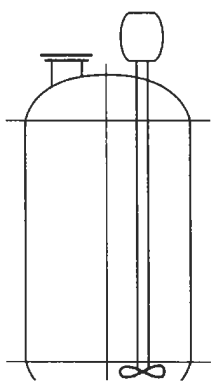

Type 3: Angular Off Center (AOC)

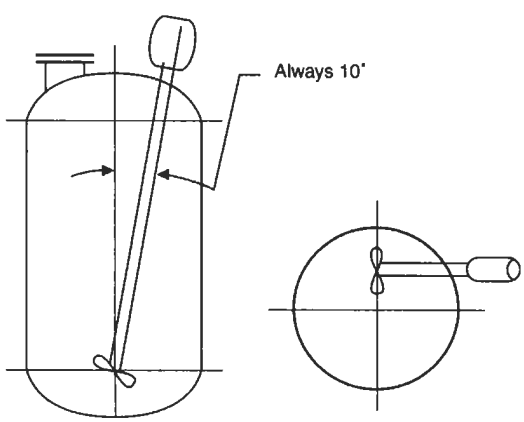

Types of Mounting

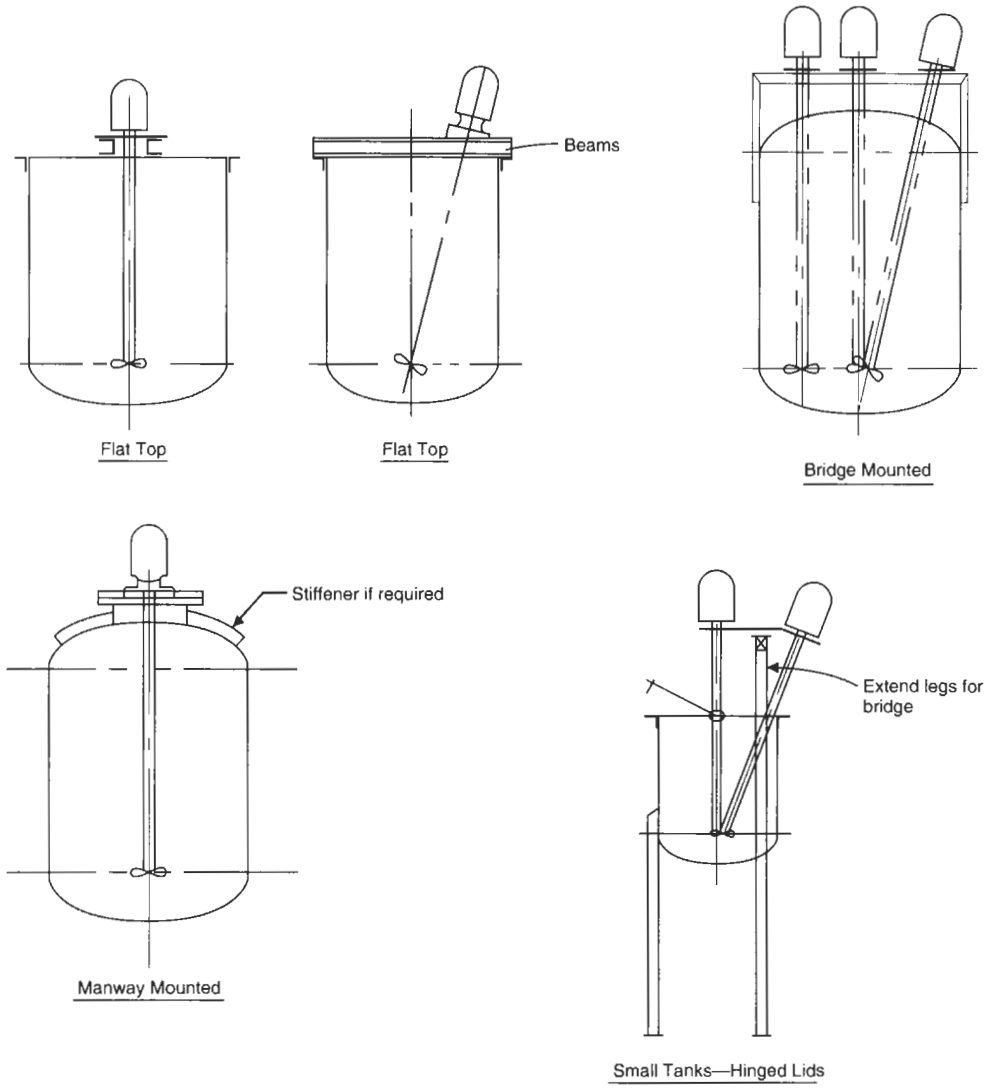

Baffle Supports

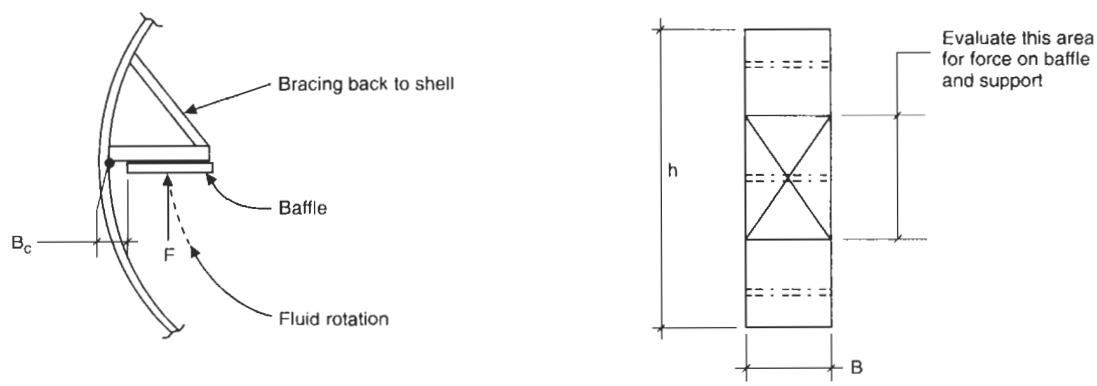

Types of Impellers

Turbine Impellers

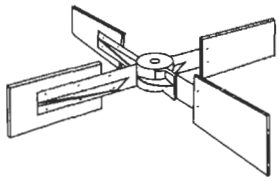

a. Flat blade

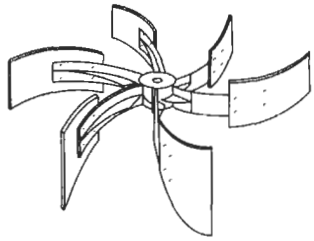

b. Curved blade

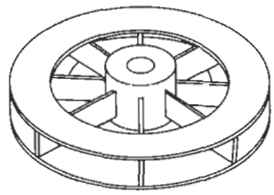

c. Shrouded

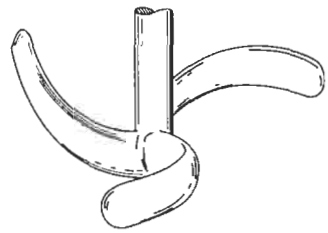

d. Retreating blade

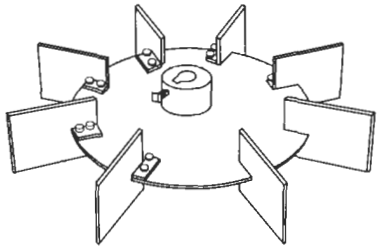

e. Disk flat blade

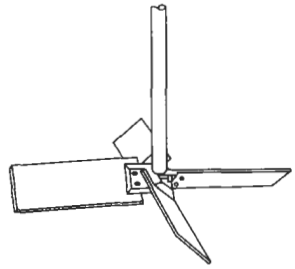

f. Pitched blade

Anchor Impellers

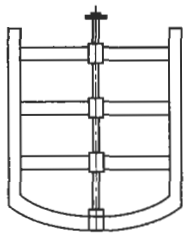

a. Horseshoe with cross members

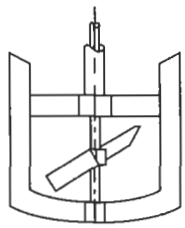

b. Double-motion horseshoe paddle

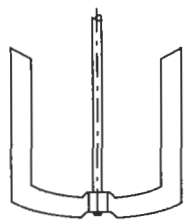

c. Horseshoe

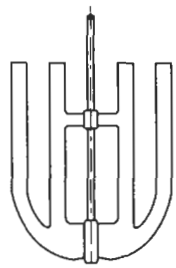

d. Gate type

Miscellaneous Impellers

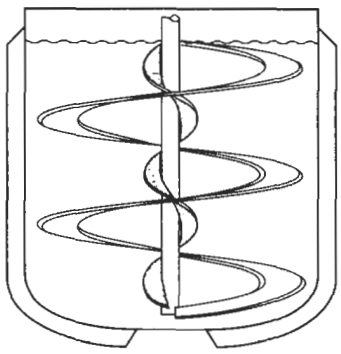

Helical ribbon

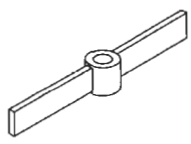

Straight flat blade

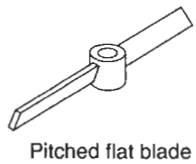

Pitched flat blade

Paddle

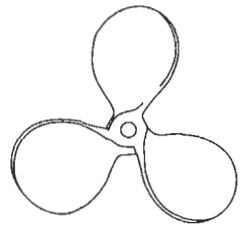

Propeller

Typical Applications

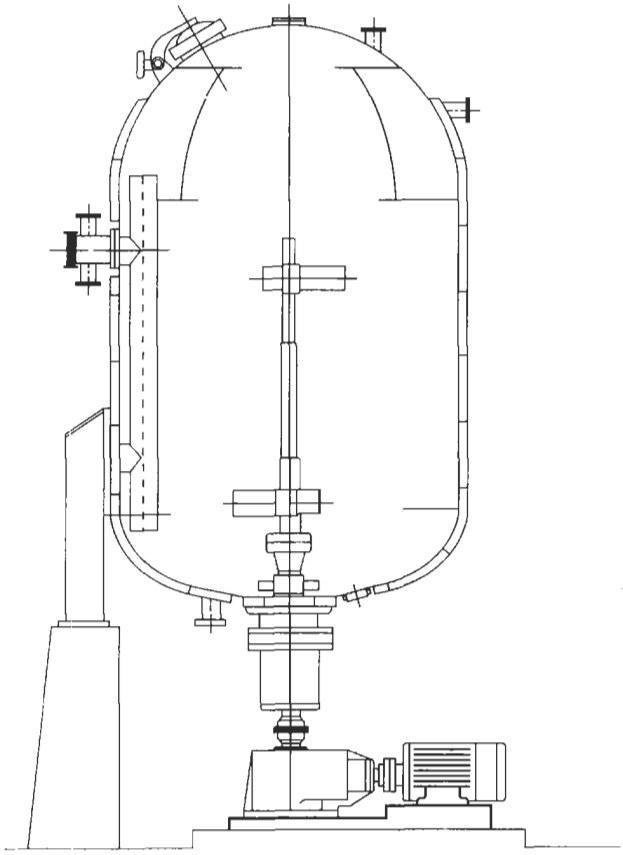

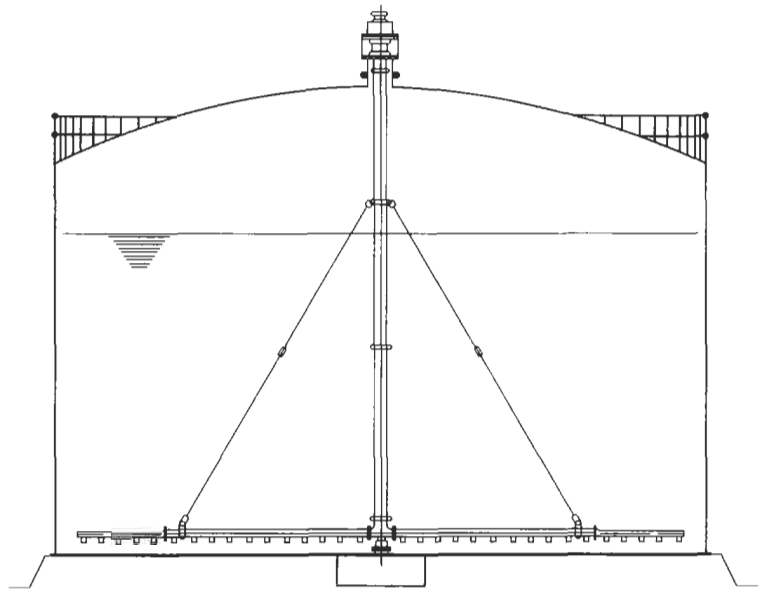

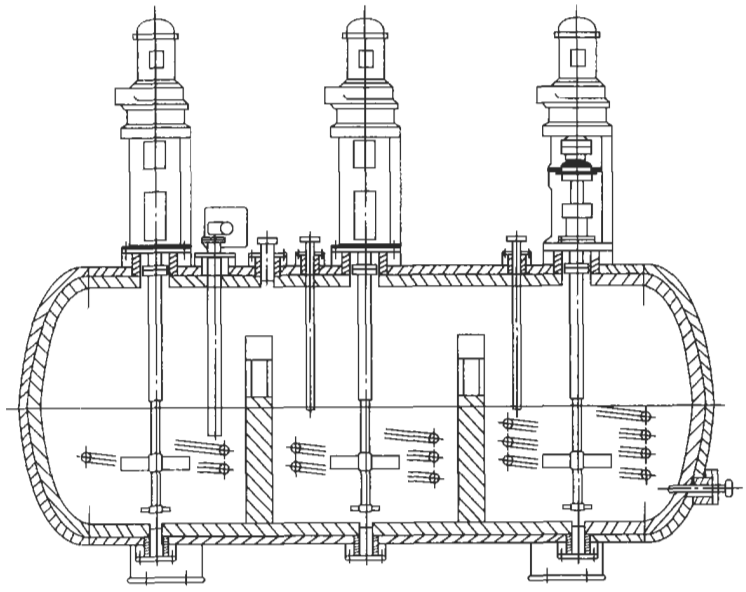

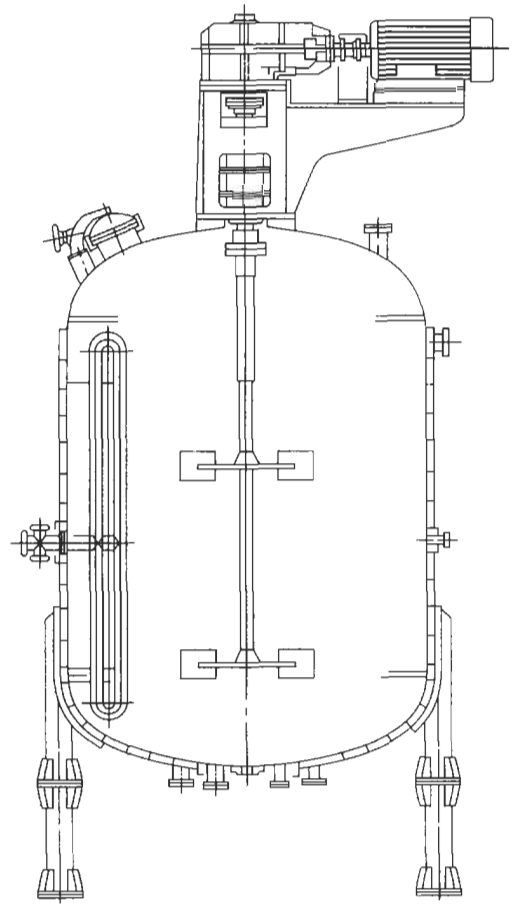

Impeller Actions

Shear Action

- Break up liquid blobs.
- Use radial-flow impeller such as turbine or paddle types without pitched blades.

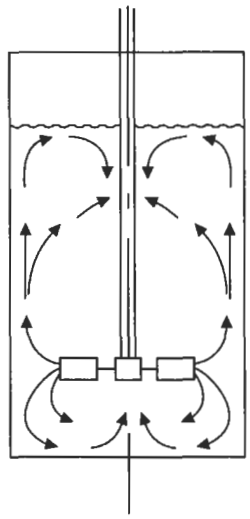

Pumping Action

- Lift solids from bottom.
- Good for blending solids and liquids.
- Use propeller or turbine or paddle type with pitched blades.

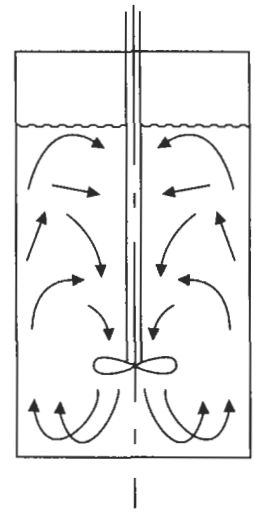

PROCEDURE 6-8

DESIGN OF PIPE COILS FOR HEAT TRANSFER [10–18]

This procedure is specifically for helical pipe coils in vessels and tanks. Other designs are shown for illustrative purposes only. Helical coils are generally used where large areas for rapid heating or cooling are required. Heating coils are generally placed low in the tank; cooling coils are placed high or uniformly distributed through the vertical height. Here are some advantages of helical pipe coils.

1. Lower cost than a separate outside heat exchanger.
2. Higher pressures in coils.
3. Fluids circulate at higher velocities.
4. Higher heat transfer coefficients.
5. Conservation of plot space in contrast with a separate heat exchanger.

Manufacture

Helical pipe coils can be manufactured by various means:

1. Rolled as a single coil on pyramid (three-roll) rolling machine. This method is limited in the pitch that can be produced. Sizes to 8 in. NPS have been accommodated, but 3 in. and less is typical. The coil is welded into a single length prior to rolling.
2. Rolled as pieces on a three-roll, pyramid rolling machine and then assembled with in-place butt welds. The welds are more difficult, and a trimming allowance must be left on each end to remove the straight section.
3. Coils can also be rolled on a steel cylinder that is used as a mandrel. The rolling is done with some type of turning device or lathe. The coil is welded into a single length prior to coiling. The pitch is marked on the cylinder to act as a guide for those doing the forming.
4. The most expensive method is to roll the pipe/tubing on a grooved mandrel. This is utilized for very small Dc-to-d ratios, usually followed by some form of heat treatment while still on the mandrel. Grooved mandrels create a very high-tolerance product and help to prevent flattening to some extent.

Coils are often rolled under hydro pressures as high as 85% of yield to prevent excessive ovalling of the pipe or tube. The accomplish this, the hydrotest pump is put on wheels and pulled along during the rolling process. End caps are welded on the pipe to maintain the pressure during rolling.

Stainless steel coils may require solution annealing after forming to prevent "springback" and alleviate high residual stresses. Solution heat treatment can be performed in a fixture or with the grooved mandrel to ensure dimensional stability.

Springback is an issue with all coils and is dependent on the type of material and geometry. This springback allowance is the responsibility of the shop doing the work. Some coils may need to be adjusted to the right diameter by subsequent rolling after the initial forming.

The straight length of pipe is "dogged" to the mandrel prior to the start of the rolling to hold the coil down to the mandrel. Occasionally it may be welded rather than dogged.

Applications for grooved mandrel are very expensive due to the cost of the machining of the mandrel. Mandrels that are solution heat treated with the coil are typically good for only one or two heat treatments due to the severe quench. Thus the cost of the mandrel must be included in the cost of the coil.

Design

There are two distinct aspects of the design of pipe coils for heat transfer. There is the thermal design and the physical design. The thermal design falls into three parts:

1. Determine the proper design basis.
2. Calculating the required heat load.
3. Computing the required coil area.

Physical design includes the following:

1. Selecting a pipe diameter.
2. Computing the length.
3. Determine the type of coil.
4. Location in the tank or vessel.
5. Detailed layout.

To determine the design basis, the following data must be determined:

1. Vessel/tank diameter.
2. Vessel/tank height.
3. Insulated or uninsulated.
4. Indoor or outdoor.
5. Open top or closed top.

6. Maximum depth of liquid.
7. Time required to heat/cool.
8. Agitated or nonagitated.
9. Type of operation.

The type of operation is characterized in the following cases:

1. Batch operation: heating.
2. Batch operation: cooling.
3. Continuous operation: heating.
4. Continuous operation: cooling.

Coils inside pressure vessels may be subjected to the internal pressure of the vessel acting as an external pressure on the coil. In addition, steam coils should be designed for full vacuum or the worst combination of external loads as well as the internal pressure condition. The coil must either be designed for the vessel hydrotest, externally, or be pressurized during the test to prevent collapse.

Pressure Drop

It is important that pressure drop be considered in designing a pipe coil. This will establish the practical limits on the length of pipe for any given pipe size. Large pressure drops may mean the coil is not capable of transmitting the required quantity of liquid at the available pressure. In addition, the fluid velocities inside the coil should be kept as high as possible to reduce film buildup.

There are no set rules or parameters for maximum allowable pressure drop. Rather, an acceptable pressure drop is related to the velocity required to effect the heat transfer. For liquids a minimum velocity of 1–3 feet per second should be considered. For gases "rho-V squared" should be maintained around 4000.

Pressure drop in helical coils is dependent on whether the flow is laminar or turbulent. Typically flows are laminar at low fluid velocities and turbulent at high fluid velocities. In curved pipes and coils a secondary circulation takes place called the *"double eddy"* or *Dean Effect*. While this circulation increases the friction loss, it also tends to stabilize laminar flow, thus increasing the "critical" Reynolds number.

In general, flows are laminar at Reynolds numbers less than 2000 and turbulent when Reynolds numbers are greater than 4000. At Reynolds numbers between 2000 and 4000, intermittent conditions exist that are called the *critical zone*.

For steam flow, the pressure drop will be high near the inlet and decrease approximately as the square of the velocity. From this relationship, combined with the effects of increased specific volume of the steam due to pressure drop, it can be shown that the average velocity of the steam in the coil is three-fourths of the maximum inlet velocity. For the purposes of calculating pressure drop, this ratio may be used to determine the average quantity of steam flowing within the coil.

Heat Transfer Coefficient, U

The heat transfer coefficient, U, is dependent on the following variables:

1. Thermal conductivity of metal, medium, and product.
2. Thickness of metal in pipe wall.
3. Fluid velocity.
4. Specific heat.
5. Density and viscosity.
6. Fouling factor (oxidation, scaling).
7. Temperature differences (driving force).
8. Trapped gases in liquid flow.
9. Type of flow regime (laminar versus turbulent, turbulent being better).

Notes

All of the following apply specifically to helical coils.

1. Overdesign rather than underdesign.
2. The recommended ratio of vessel diameter to pipe diameter should be about 30. However, it has been found that 2 in. pipe is an ideal size for many applications. Pipe sizes of 6 in. and 8 in. have been used.
3. Helical coils are concentric with the vessel axis.
4. Two or more coils may be used, with the recommended distance between the coils of two pipe diameters.
5. Seamless pipe is preferred. Schedule 80 pipe is preferred.
6. Limit maximum pitch to five pipe diameters, with 2 to 2½ recommended. Physical limits should be set between 4 in. minimum and 24 in. maximum.
7. Centerline radius of bends should be 10 times the pipe diameter minimum. (1-in. pipe = 10-in. centerline radius).
8. It is recommended for bend ratios over 5% or fiber elongation greater than 40% that the coils be heat treated after forming. The bend ratio can be computed as follows:

$$\frac{100\,t_p}{R}$$

9. Flattening due to forming should be limited to 10%. Some codes limit ovality to as little as 8%. Ovality may

be computed as follows:

$$100\left(\frac{d_{max} - d_{min}}{d}\right)$$

10. Wall thinning occurs any time a pipe is bent. The inside of the bend gets thicker and the outside of the bend gets thinner. Typically this is not a problem because the outside of the bend that gets thinner will also experience a certain amount of work hardening that can make up for the loss of wall thickness. The tighter the bend, the greater the thinning. Anticipated wall thinning due to forming can be computed as follows:

$$t_p\left(1 - \frac{R}{R + 0.5d_o}\right)$$

11. Distance between an internal coil and the side wall or bottom of the tank or vessel is a minimum of 8 in. and a maximum of 12 in. (dimension "c").
12. All coils should be evenly supported at a minimum of three places. Supports should be evenly spaced and allow for thermal expansion of the coil.
13. Coils should be sloped a minimum of $\frac{1}{8}$ in. per foot to allow for drainage.
14. Certain flow rates in spiral coils can set up harmonic vibrations that could ultimately be destructive to the coil, supports, etc. In addition, slug flow can cause extreme coil movement. If vibration or movement becomes a problem, then either the flow rate or the coil support arrangement must be changed.
15. Limit velocity to 10 feet per second in coils.
16. The "steady-state" condition requires less coil than any other design condition.
17. If pressure drop is excessive, the coil may be split into multiple coils with manifolds or separate inlets or outlets.

Types of Coils

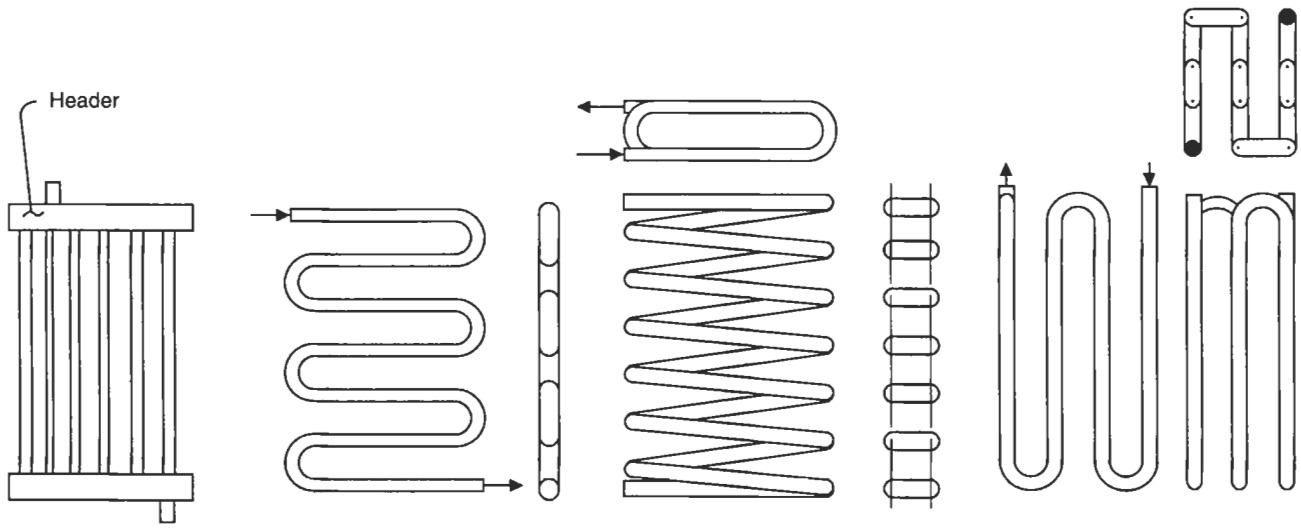

Harp (flat)

Flat (serpentine)

Oval

Box

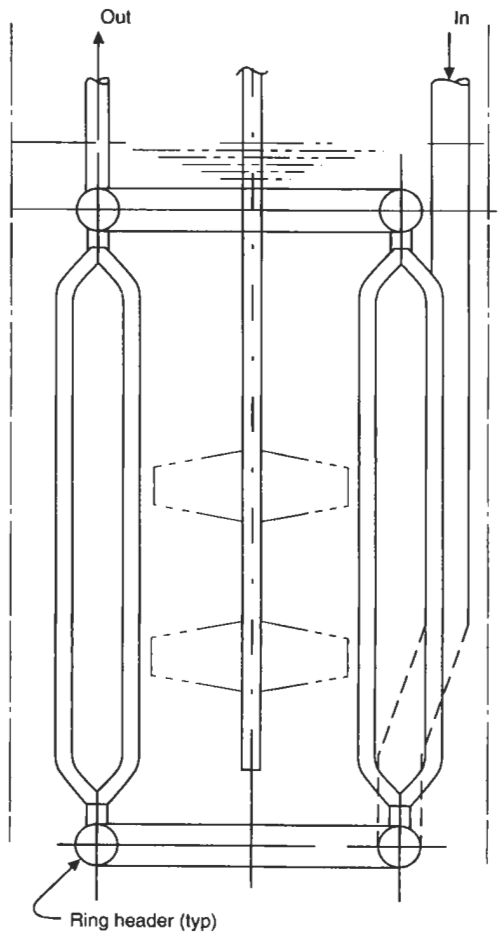

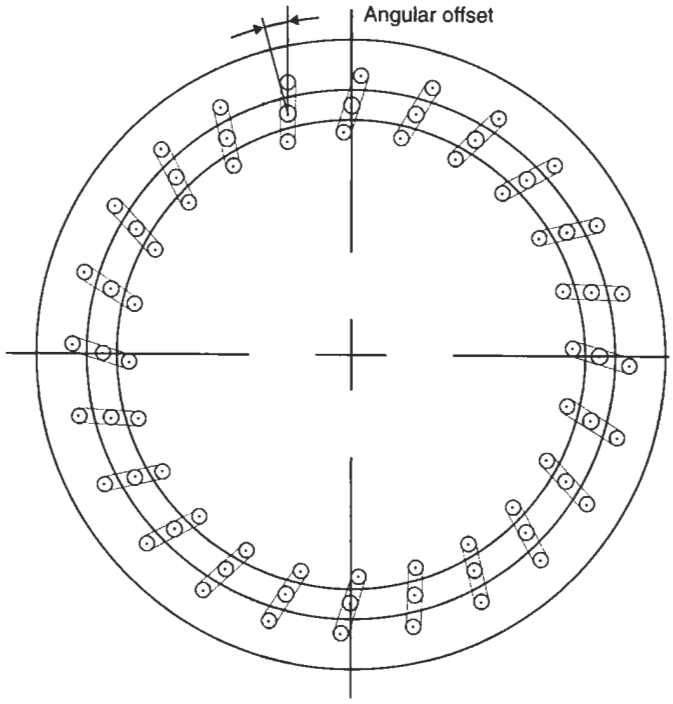

Circular Harp

Note:
Direction of flow will vary depending on the heating or cooling application

Coil Layout for Flat-Bottom Tanks

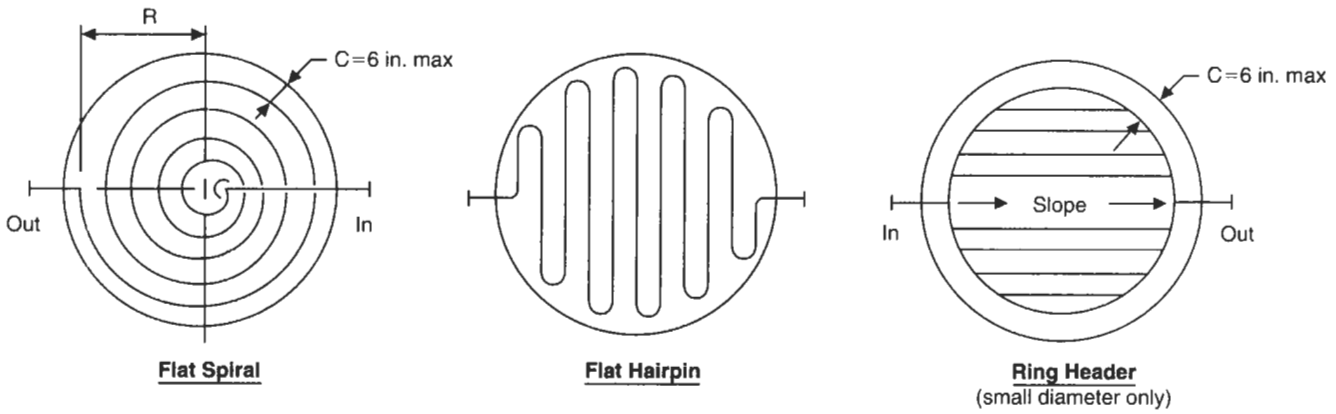

Developed length of flat spiral coils:

$$L_D = \frac{\pi R^2}{d_o + C}$$

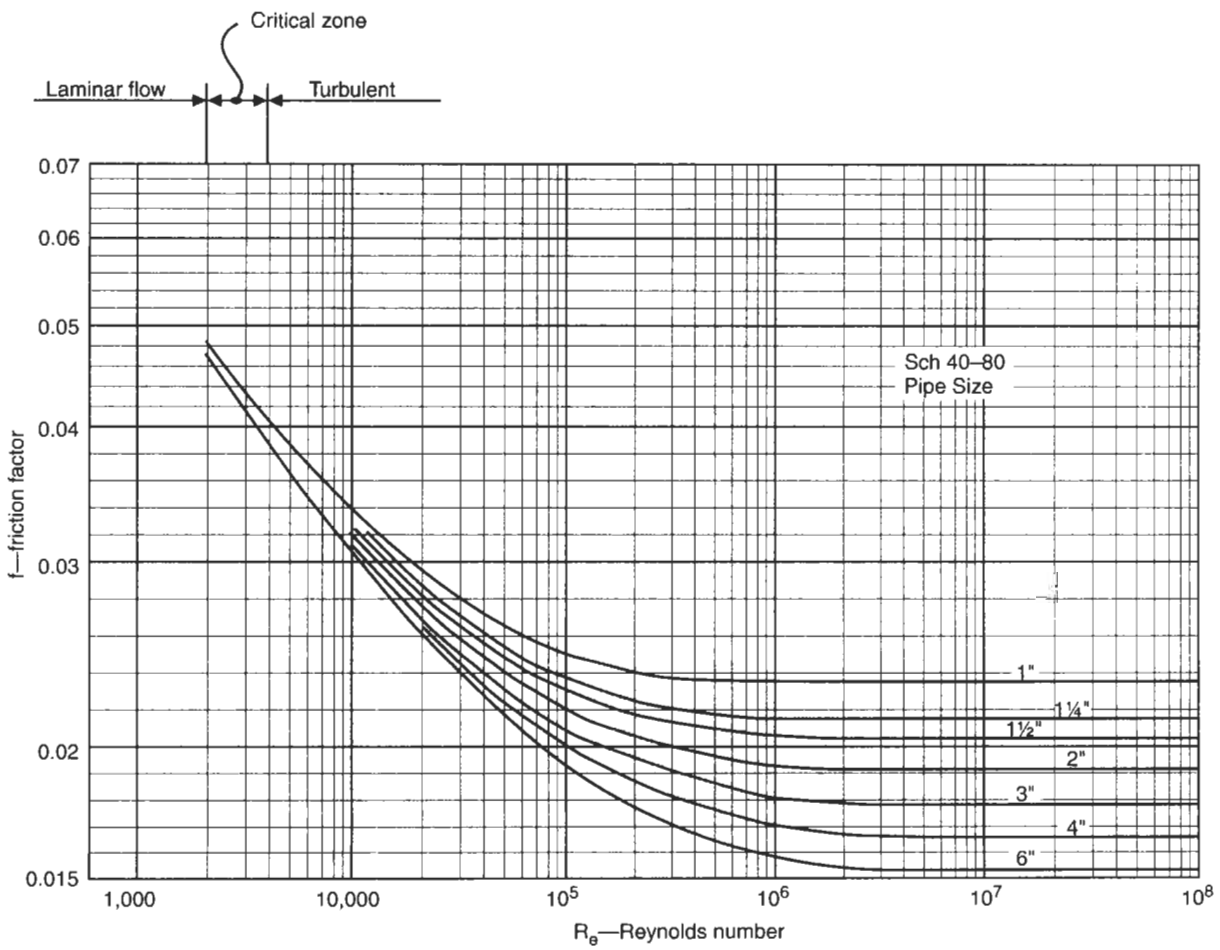

Figure 6-29. Friction factor, f, versus Reynolds number, R_e.

Coil Supports

Manifold for Multiple Coils

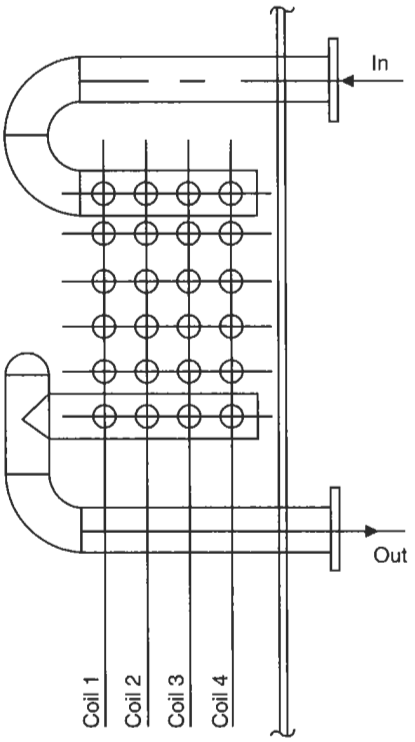

Support for Single Coil

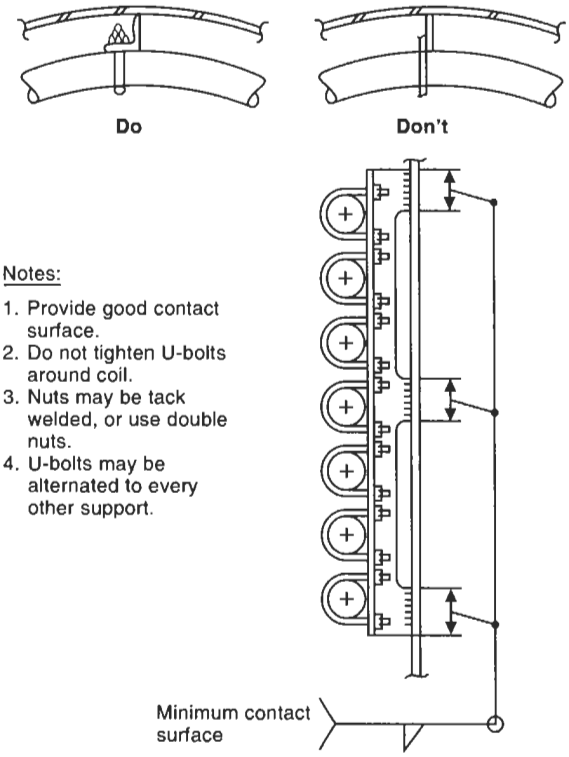

Support for Multiple Coils

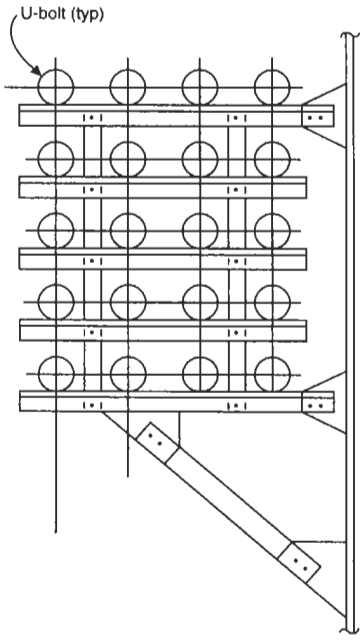

Manifold for Multiple Coils, Multiple Series

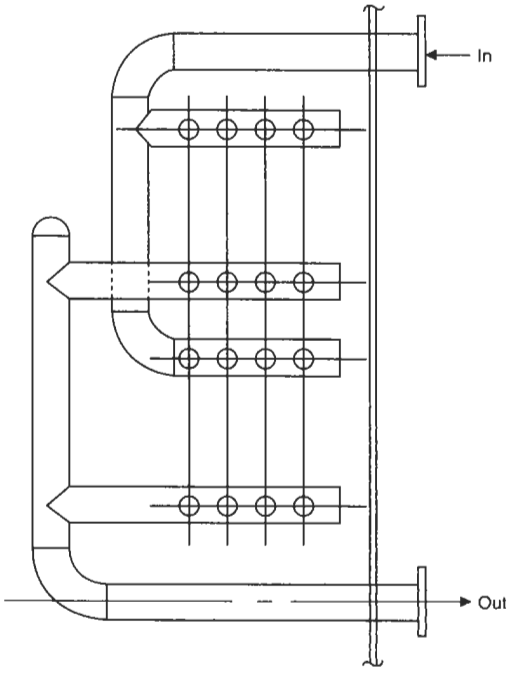

DESIGN OF HELICAL COILS

Notation

A = vessel surface area, ft^2
A_r = surface area of coil required, ft^2
C_p = specific heat of coil or vessel contents, BTU/lb/°F
D_c, d_c = centerline diameter of coil, ft (in.)
D_v = inside diameter of vessel, ft
D_o, D_i = OD/ID of pipe, ft
d_o, d_i = OD/ID of pipe, in.
E = enthalpy, latent heat of evaporation, BTU/lb
f = friction factor
F_{LF} = laminar flow factor
G = rate of flow or quantity of liquid to be heated or cooled, ft^3/hr
GTD = greatest temperature difference, °F
g = acceleration due to gravity, 4.17×10^8 ft/hr^2
h_o, h_i = film coefficients, BTU/hr-ft^2-°F
K = thermal conductivity of pipe, BTU/hr-ft^2-°F-in.
L_r = minimum required length of coil, ft
L_s = developed length of coil, ft
LTD = least temperature difference, °F
M = mass flow rate, lb/hr
N = number of turns in coil
NPS = nominal pipe size of coil, in.
P = internal pressure in coil, psig
p = pitch of coil, in.
Q = total heat required, BTU/hr
Q_L = heat loss from vessel shell, BTU/hr
q_L = unit heat loss, BTU/hr
R_e = Reynolds number
S = external pipe surface area, ft^2
S_g = specific gravity of liquid
T = time required to heat or cool the vessel contents, hr
t_p = wall thickness of pipe, in.
t_1 = coil temperature, °F
t_2 = initial temperature of vessel contents, °F
t_3 = final temperature of vessel contents, °F
U = heat transfer coefficient, BTU/hr-ft^2-°F
V = velocity in coil, ft/sec
V_T = volume of vessel contents, ft^3
V_s = specific volume, equal to inverse of density, 1/w, ft^3/lb
W = rate of flow, lb/hr
w = density, lb/ft^3
ΔP = pressure drop, psi
ΔP_L = straight-line pressure drop, psi
ΔT = log mean temperature difference, °F
μ = viscosity, cP

Helical Coil with Baffles and Agitators

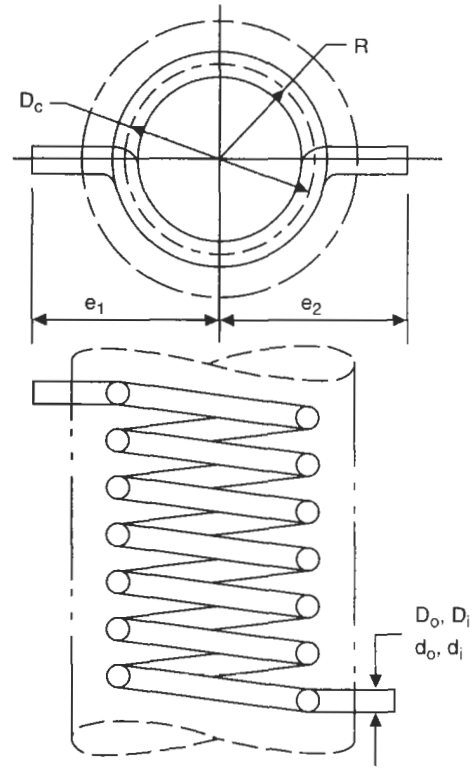

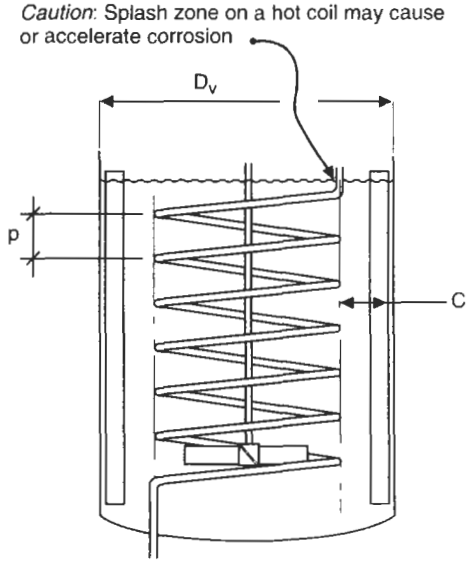

Calculations

Solving for Heat Transfer Coefficient, U

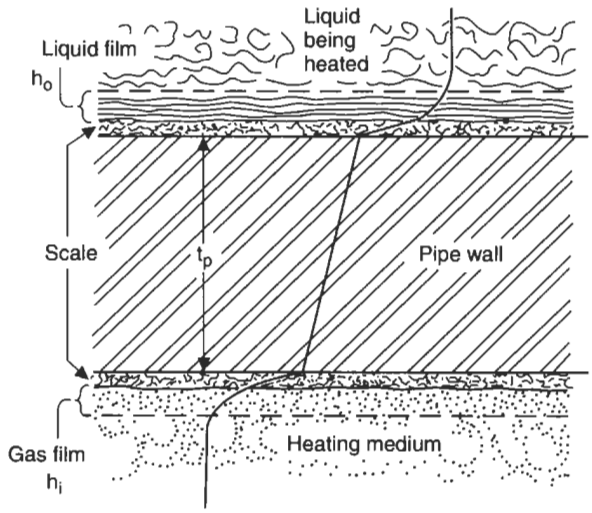

The value of U can be taken from the various tables or calculated as follows:

$$U = \frac{1}{\frac{1}{h_o} + \frac{t_p}{K} + \frac{1}{h_i}}$$

Heating Applications

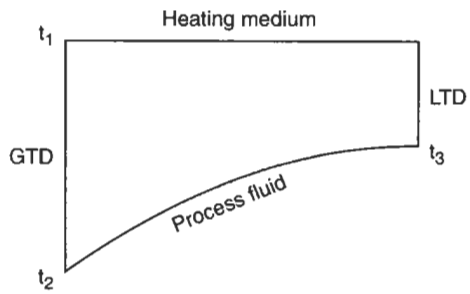

- *Determine mass flow rate, M.*

$$M = 62.4GS_g$$

- *Determine ΔT.*

$$GTD = t_1 - t_2$$
$$LTD = t_1 - t_3$$
$$\Delta T = \frac{GTD - LTD}{2.3 \log\left(\frac{GTD}{LTD}\right)}$$

- *Heat required, Q.*

$$Q = MC_p \Delta T + Q_L$$

- *Area required, A_r.*

$$A_r = \frac{Q}{U \Delta T}$$

- *As an alternative, compute the time required, T.*

$$T = \frac{WC_pGTD}{A_rU\Delta T}$$

Cooling Applications

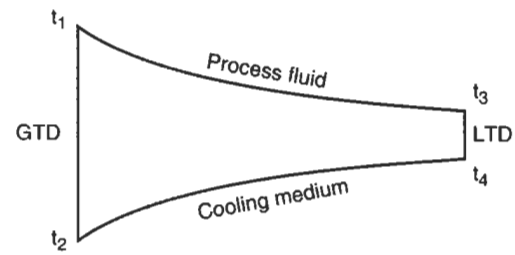

- *Cooling applications are equivalent to "heat recovery" types of applications. Only the "parallel" type is shown.*
- *Determine mass flow rate, M.*

$$M = 62.4GS_g$$

- *Determine ΔT.*

$$GTD = t_1 - t_2$$
$$LTD = t_3 - t_4$$
$$\Delta T = \frac{GTD - LTD}{2.3 \log\left(\frac{GTD}{LTD}\right)}$$

- *Heat required, Q.*

$$Q = MC_p \Delta T - Q_L$$

Subtract heat losses to atmosphere from heat to be recovered.

- *Area required, A_r.*

$$A_r = \frac{Q}{U\,\Delta T}$$

- *As an alternative, compute the time required, T.*

$$T = \frac{WC_pGTD}{A_rU\,\Delta T}$$

Coil Sizing

- *Make first approximate selection of nominal pipe size, NPS.*

$$NPS = \frac{D_c}{30}$$

Preliminary selection: _____

Pipe properties: $d_i =$ _____

$D_i =$ _____

$S =$ _____

- *Determine length of coil required, L_r.*

$$L_r = \frac{A_r}{S}$$

- *Check minimum centerline radius, R.*

$R > 10NPS$

- *Select a pitch of coil, p.* Note: Pitch should be 2 to 2.5 × NPS.

Use $p =$ _____

- *Determine the number of turns required, N.*

$$N = \frac{L_r}{\sqrt{(\pi D_c)^2 + p^2}}$$

Use $N =$ _____

- *Developed length, L_d.*

$$L_d = N\sqrt{(\pi D_c)^2 + p^2}$$

Reynolds Number

- *For steam heating coils.*

1. Given Q, determine the rate of flow, W:

$$W = \frac{Q}{E}$$

2. Reynolds number, R_e:

$$R_e = \frac{6.31W}{d_i\mu}$$

- *For other liquids and gases.*

1. Find velocity in coil, V:

$$V = \frac{0.0509WV_S}{d_i^2}$$

2. Reynolds number, R_e:

$$R_e = \frac{123.9d_iVw}{V_S\mu}$$

- *Find R_e critical.*

For coils, the critical Reynolds number is a function of the ratio of pipe diameter to coil diameter, computed as follows:

$$R_e \text{ critical} = 20{,}000\left(\frac{D_i}{D_C}\right)^{0.32}$$

The critical Reynolds number can also be taken from the graph in Figure 6-31.

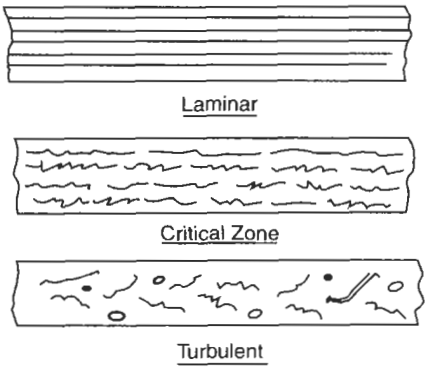

Figure 6-30. Various flow regimes.

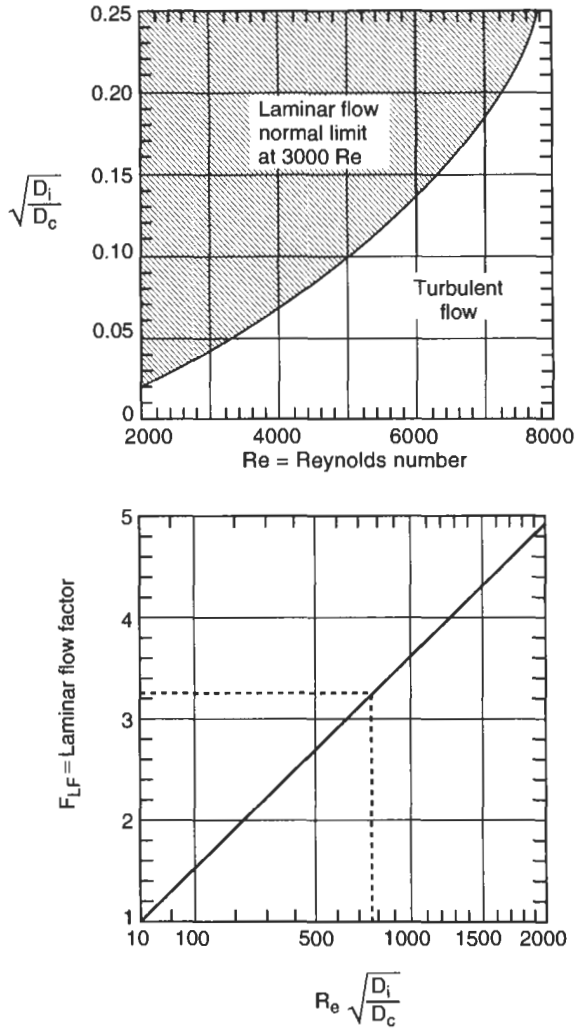

Figure 6-31. Pressure drop factors for flow-through coils. From ASME Transaction Journal of Basic Engineering, Volume 81, 1959, p. 126.

Pressure Drop

- If steam is the heating medium, the pressure drop of condensing steam is;

$$\Delta P = \frac{2fL_aV^2}{3gD_i}$$

The units are as follows;
f = 0.021 for condensing steam
L_a is in feet
V is in ft/hr
g is in ft/hr^2
D_i is in ft

- For other fluids and gases;

a. If flow is laminar,

$$\Delta P_L = \frac{0.00000336fL_aW^2}{d_i^4w}$$

$$\Delta P = \Delta P_L(F_{LF})$$

b. For turbulent flow,

$$\Delta P_L = \frac{0.00000336fL_aW^2}{d_i^5w}$$

$$\Delta P = \Delta P_L\sqrt{R_e\left(\frac{d_i}{d_c}\right)^2}$$

Sample Problem 1

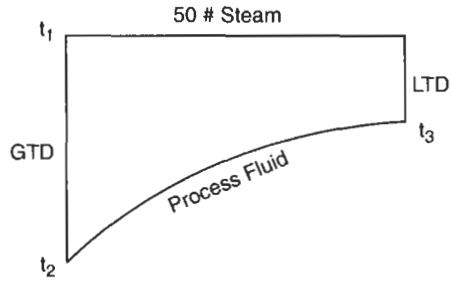

Heating Coil: Steam to Oil

- *Batch process.*
- *No agitation (other than natural circulation).*
- *Coil material = carbon steel.*
- *Properties:*

Steam:

$V_s = 6.7$
$E = 912$
$\mu = 0.015$

Oil:

$C_p = 0.42$
$S_g = 0.89$

Vessel:

8-ft diameter × 30-ft tan-tan
Liquid height = 15 ft
Volume to liquid height: 700 ft^3 = 5237 gallons

Temperatures:

$t_1 = 300°F$
$t_2 = 60°F$
$t_3 = 200°F$

T = time to heat = 1 hr

- *Log mean temperature difference, ΔT.*

$GTD = t_1 - t_2 = 300 - 60 = 240$
$LTD = t_1 - t_3 = 300 - 200 = 100$

$$\Delta T = \frac{GTD - LTD}{2.3 \log\left(\frac{GTD}{LTD}\right)} = \frac{240 - 100}{2.3 \log\left(\frac{240}{100}\right)} = 160°F$$

- *Quantity of liquid to be heated, G.*

For batch process: $G = \frac{V_T}{T} = \frac{700}{1} = 700\ ft^3/hr$

- *Mass flow rate, M.*

$M = 62.4GS_g = 62.4(700)0.89 = 38{,}875\ lb/hr$

- *Heat required, Q.*

$$Q = MC_p\Delta T + Q_L = 38{,}875(0.42)160 + 0$$
$$= 2{,}612.413BTU/hr$$

- *Heat transfer coefficient, U.*

U = from Table 6-20: 50–200
from Table 6-21: 20–25
from Table 6-22: 35–60
by calculation: 10–180

Use U = 40.

- *Area of coil required, A_r.*

$$A_r = \frac{Q}{U\,\Delta T} = \frac{(2{,}612{,}413)}{40(160)} = 408\ ft^2$$

- *Determine the physical dimensions of the coil.*

$$NPS = \frac{D_c}{30} = \frac{96}{30} = 3.2 \quad \text{Use 3-in. pipe}$$
$C = 12$

Therefore $D_c = 72$ in.

- *Pipe properties.*

Assume 3-in. Sch 80 pipe.

$d_i = 2.9$ in.
$D_i = 0.2417$ ft
$S = 0.916\ ft^2/ft$

- *Length of pipe required, L_r.*

$$L_r = \frac{A_r}{S} = \frac{408}{0.916} = 445\ ft$$

- *Check minimum radius.*

$$\frac{D_c}{2} > 10\,d_i = \frac{72}{2} > 10(3) = 36 > 30$$

- *Determine pitch, p.*

$p_{max} = 5NPS = 5(3) = 15$
$p_{min} = 2NPS = 2(3) = 6$

Use $p = 2.5(3) = 7.5$ in.

- *Find number of turns of spiral, N.*

$$N = \frac{L_r}{\sqrt{(\pi D_c)^2 + p^2}} = \frac{445}{\sqrt{[\pi(6)]^2 + 0.625^2}} = 23.59$$

Use (24) turns × 7.5 in. = 180 in.—OK.

- *Find actual length of coil, L_a.*

$$L_a = N\sqrt{(\pi D_c)^2 + p^2}$$
$$L_a = 24\sqrt{[\pi(6)]^2 + 0.625^2} = 486\ ft$$

- *Rate of flow, W.*

$$W = \frac{Q}{E} = \frac{2{,}612{,}413}{912} = 2864\ lb/hr$$

- *Reynolds number, R_e.*

$$R_e = \frac{6.31W}{d_i\mu} = \frac{6.31(2864)}{2.9(0.015)} = 415{,}445$$

- *Velocity of steam in coil, V.*

$$V = \frac{0.00085WV_s}{d_i^2} = \frac{0.00085(2864)6.7}{2.9^2}$$
$$= 1.94\ ft/sec = 6982\ ft/hr$$

- *Pressure drop, ΔP.*

$$\Delta P = \frac{2fL_aV^2}{3gD_i} = \frac{2(0.012)486(6984^2)}{3(4.17 \times 10^8)0.2417} = 1.88\ psi$$

Sample Problem 2

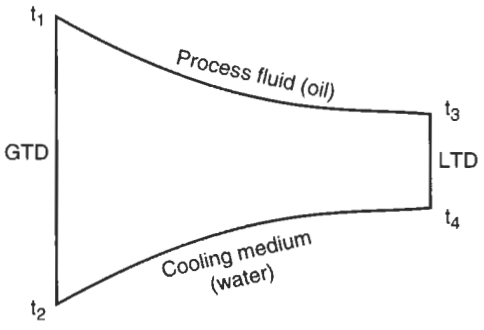

Cooling application:	Parallel flow
Process fluid:	Hot oil (vessel contents)
Cooling medium:	Water (coil contents)
Vessel indoors:	$Q_L = 0$
Discharge rate:	3000 GPH
Agitation:	Yes
Baffles:	Yes

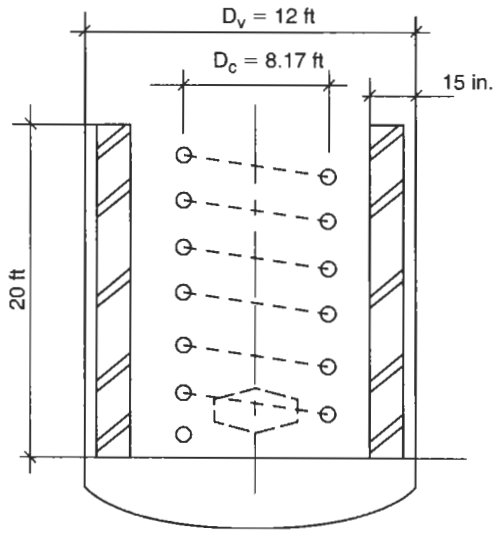

Properties.

Process fluid

$C_p = 0.42$
$\mu = 13$ @ 110°F

Coil medium

$\mu = 0.75$ @ 90°F
$V_s = 0.0161$
$w = 62.4$

Temperatures

$t_1 = 140°F$
$t_2 = 60°F$
$t_3 = 110°F$
$t_4 = 90°F$

- *Log mean temperature difference, Δt.*

$$GTD = t_1 - t_2 = 140 - 60 = 80$$

$$LTD = t_3 - t_4 = 110 - 90 = 20$$

$$\Delta T = \frac{GTD - LTD}{2.3 \log\left(\frac{GTD}{LTD}\right)} = \frac{80 - 20}{2.3 \log\left(\frac{80}{20}\right)} = 43°F$$

- *Mass flow rate, M.*

$$M = 3000 \frac{gal}{hr}\left(8.33 \frac{lb}{gal}\right) = 24{,}990 \text{ lb/hr}$$

- *Heat required, Q.*

$$Q = MC_p\Delta T - Q_L = 24{,}990(0.42)43 - 0 = 451{,}319 \text{ BTU/hr}$$

- *Heat transfer coefficient, U.*

U = from Table 6-22: 10 – 20

Use U = 15.

- *Area of coil required, A_r.*

$$A_r = \frac{Q}{U\Delta T} = \frac{451{,}319}{15(43)} = 700 \text{ ft}^2$$

- *Determine baffle sizes.*

Baffle width, $B = 0.083D = 12$ in.
Off wall, $B_c = 0.021D = 3$ in.

- *Determine the physical dimensions of the coil.*

$$NPS = \frac{D_v}{30} = \frac{144}{30} = 4.8$$

Use 4-in. pipe.

- *Pipe properties.*

Assume 4-in. Sch 80 pipe:

$d_i = 3.826$ in.
$D_i = 0.3188$ ft
$S = 1.178 \text{ ft}^2/\text{ft}$

- *Determine coil diameter, D_c.*

$$D_c = 144 - 2(15) - 2(8) = 98 \text{ in. } (8.17 \text{ ft})$$

- *Length of pipe required, L_r.*

$$L_r = \frac{A_r}{S} = \frac{700}{1.178} = 595 \text{ ft}$$

- *Check minimum radius.*

$$\frac{D_c}{2} > 10d_i = \frac{98}{2} > 10(4.5) = 49 > 45$$

- *Determine pitch, p.*

$$p_{max} = 5NPS = 5(4) = 20$$
$$p_{min} = 2NPS = 2(4) = 8$$
$$\text{Use } p = 2.5(4) = 10 \text{ in.} = 0.833 \text{ ft}$$

- *Find number of turns of spiral, N.*

$$N = \frac{L_r}{\sqrt{(\pi D_c)^2 + p^2}} = \frac{595}{\sqrt{[\pi(8.17)]^2 + 0.833^2}} = 21.6$$

Use (22) turns × 10 in. = 220 in. < 240 in. —OK

- *Find actual length of coil, L_a.*

$$L_a = N\sqrt{(\pi D_c)^2 + p^2}$$
$$L_a = 22\sqrt{[\pi(8.17)]^2 + 0.833^2} = 565 \text{ ft}$$

- *Rate of flow, W.*

$$W = 24{,}990 \text{ lb/hr}$$

- *Velocity, V.*

$$V = \frac{0.0509WV_s}{d_i^2} = \frac{0.0509(24{,}990)0.0161}{3.826^2} = 1.4 \text{ ft/sec}$$

- *Reynolds number, R_e.*

$$R_e = \frac{123.9d_iV}{V_S\mu} = \frac{123.9(3.826)1.4}{0.0161(0.75)} = 54{,}961$$

Therefore flow is turbulent!

- *Straight-line pressure drop, ΔP_L.*

$$\Delta P_L = \frac{(3.36 \times 10^{-6})fL_aW^2}{d_i^5 w}$$

$$\Delta P_L = \frac{(3.36 \times 10^{-6})0.0218(565)24{,}990^2}{3.826^5(62.11)} = 0.5 \text{ psi}$$

- *Pressure drop, ΔP.*

$$\Delta P = \Delta P_L\sqrt{R_e\left(\frac{d_i}{d_C}\right)^2}$$

$$\Delta P = 0.5\sqrt{54{,}961\left(\frac{3.826}{98}\right)^2} = 4.57 \text{ psi}$$

Table 6-12
Pipe Data

Size (in.)	Schedule	d_i (in.)	D_i (ft)	S (ft^2/ft)
1	40	1.049	0.0874	0.344
	80	0.957	0.0797	
1.25	40	1.38	0.115	0.435
	80	1.278	0.1065	
1.5	40	1.61	0.1342	0.497
	80	1.5	0.125	
2	40	2.067	0.1722	0.622
	80	1.939	0.1616	
3	40	3.068	0.2557	0.916
	80	2.9	0.2417	
4	40	4.026	0.3355	1.178
	80	3.826	0.3188	
6	40	6.065	0.5054	1.734
	80	5.761	0.4801	

Table 6-13
Film Coefficients

	Medium	Film Coefficient, h_o or h_i
No Change	Water	150–2000
	Gasses	3–50
	Organic solvents	60–500
	Oils	10–120
Condensing	Steam	1000–3000
	Organic solvents	150–500
	Light oil	200–400
	Heavy oil	20–50
Evaporation	Water	1000–2000
	Organic solvents	100–300
	Light oil	200–300
	Heavy oil	100–200

Table 6-14
Properties of Gases

Material	w	C_p		
		32°F	212°F	932°F
Air	0.0808	0.241	0.242	0.245
Ammonia	0.0482	0.52	0.54	
Benzene		0.22	0.33	0.56
Oxygen	0.0892	0.22	0.225	0.257
Nitrogen	0.0782	0.25	0.25	0.27
Methane	0.0448	0.53	0.6	0.92
Ethane	0.0848	0.4	0.5	0.84
Butane	0.1623	0.375	0.455	0.81
Propane	0.1252	0.38	0.46	0.82
Ethylene	0.0783	0.36	0.45	0.72
CO	0.0781	0.25	0.26	0.27
CO_2	0.1235	0.2	0.21	0.26
Steam			0.453	0.507

Table 6-15
Thermal Conductivity of Metals, K, BTU/hr × sq ft/°F/in.

Material	Temperature, °F								
	200	300	400	500	600	700	800	900	1000
Alum—1100-0 annealed	1512	1488	1476	1464	1452	1440	1416		
Alum—6061-0	1224	1236	1248	1260	1272	1272	1272		
Alum—1100 tempered	1476	1464	1452	1440	1416	1416	1416		
Alum—6061-T6	1392	1392	1392	1392	1392	1380	1368		
Carbon steel	360	348	336	324	312	300	288	276	
C-½ Mo	348	336	324	312	300	300	288	276	
1Cr–½ Mo	324	324	312	300	288	288	276	252	252
2¼ Cr–1Mo	300	288	276	276	264	264	252	252	240
5Cr–½ Mo	252	252	252	240	240	240	240	228	228
12Cr	168	180	180	180	192	192	192	192	204
18–8 SST	112	118	120	132	132	144	144	156	156
25–20 SST	94	101	107	114	120	132	132	144	144
Admiralty brass	840	900	948	1008	1068				
Naval brass	852	888	924	960	996				
90Cu–10Ni	360	372	408	444	504	564	588	612	636
80Cu–20Ni	264	276	300	324	348	372	408	444	480
70Cu–30Ni	216	228	252	276	300	324	360	396	444
Monel	180	180	192	192	204	216	216	225	240
Nickel	456	432	396	372	348	336	336	348	372
Inconel/incoloy	113	116	119	120	120	132	132	132	144
Titanium	131	128	125	125	126				

Table 6-16
Properties of Steam and Water

Saturated Steam					Water		
P (PSIG)	**Temp. (°F)**	**V_s (ft^3/lb)**	**E (BTU/lb)**	**μ (centipoise)**	**Temp. (°F)**	**V_s (ft^3/lb)**	**μ (centipoise)**
5	227	20	961	0.014	32	0.0160	1.753
10	240	16.5	952	0.014	40	0.0160	1.5
15	250	14	945	0.014	50	0.0160	1.299
20	259	12	940	0.015	60	0.0160	1.1
25	267	10.5	934	0.015	70	0.0161	0.95
30	274	9.5	929	0.015	80	0.0161	0.85
35	281	8.5	924	0.015	90	0.0161	0.75
40	287	8	920	0.015	100	0.0161	0.68
45	292	7	915	0.015	150	0.0163	0.43
50	298	6.7	912	0.015	200	0.0166	0.3
75	320	4.9	895	0.016	250	0.0170	0.23
100	338	3.9	881	0.016	300	0.0175	0.18
125	353	3.2	868	0.017	350	0.0180	0.15
150	366	2.7	857	0.018	400	0.0186	0.13
200	388	2.1	837	0.019			
250	406	1.75	820	0.019			
300	422	1.5	805	0.02			

Table 6-17
Properties of Liquids

Material	**S_g**	**C_p**	**w**
Water	1	1	62.4
Light oils	0.89	0.42	55.5
Medium oils	0.89	0.42	55.5
Bunker "C"	0.96	0.4	59.9
#6 Fuel oil	0.96	0.4	59.9
Tar/asphalt	1.3	0.4	81.1
Molten sulfur	1.8	0.2	112.3
Molten paraffin	0.9	0.62	56.2

Table 6-18

Viscosity of Steam and Water, in centipoise, μ

°F	1 psia	2 psia	5 psia	10 psia	20 psia	50 psia	100 psia	200 psia	500 psia	1000 psia	2000 psia	5000 psia	7500 psia	10000 psia	12000 psia
saturated steam	0.667	0.524	0.388	0.313	0.255	0.197	0.164	0.138	0.111	0.094	0.078	...	...	...	...
saturated water	0.010	0.010	0.011	0.012	0.012	0.013	0.014	0.015	0.017	0.019	0.023	....	...	...	...
1500	0.041	0.041	0.041	0.041	0.041	0.041	0.041	0.041	0.042	0.042	0.042	0.044	0.046	0.048	0.050
1450	0.040	0.040	0.040	0.040	0.040	0.040	0.040	0.040	0.040	0.041	0.041	0.043	0.045	0.047	0.049
1400	0.039	0.039	0.039	0.039	0.039	0.039	0.039	0.039	0.039	0.040	0.040	0.042	0.044	0.047	0.049
1350	0.038	0.038	0.038	0.038	0.038	0.038	0.038	0.038	0.038	0.038	0.039	0.041	0.044	0.046	0.049
1300	0.037	0.037	0.037	0.037	0.037	0.037	0.037	0.037	0.037	0.037	0.038	0.040	0.043	0.045	0.048
1250	0.035	0.035	0.035	0.035	0.035	0.035	0.035	0.036	0.036	0.036	0.037	0.039	0.042	0.045	0.048
1200	0.034	0.034	0.034	0.034	0.034	0.034	0.034	0.034	0.035	0.035	0.036	0.038	0.041	0.045	0.048
1150	0.034	0.034	0.034	0.034	0.034	0.034	0.034	0.034	0.034	0.034	0.034	0.037	0.041	0.045	0.049
1100	0.032	0.032	0.032	0.032	0.032	0.032	0.032	0.032	0.033	0.033	0.034	0.037	0.040	0.045	0.050
1050	0.031	0.031	0.031	0.031	0.031	0.031	0.031	0.031	0.032	0.032	0.033	0.036	0.040	0.047	0.052
1000	0.030	0.030	0.030	0.030	0.030	0.030	0.030	0.030	0.030	0.031	0.032	0.035	0.041	0.049	0.055
950	0.029	0.029	0.029	0.029	0.029	0.029	0.029	0.029	0.029	0.030	0.031	0.035	0.042	0.052	0.059
900	0.028	0.028	0.028	0.028	0.028	0.028	0.028	0.028	0.028	0.028	0.029	0.035	0.045	0.057	0.064
850	0.026	0.026	0.026	0.026	0.026	0.026	0.027	0.027	0.027	0.027	0.028	0.035	0.052	0.064	0.070
800	0.025	0.025	0.025	0.025	0.025	0.025	0.025	0.025	0.026	0.026	0.027	0.040	0.062	0.071	0.075
750	0.024	0.024	0.024	0.024	0.024	0.024	0.024	0.024	0.025	0.025	0.026©	0.057	0.071	0.078	0.081
700	0.023	0.023	0.023	0.023	0.023	0.023	0.023	0.023	0.023	0.024	0.026	0.071	0.079	0.085	0.086
650	0.022	0.022	0.022	0.022	0.022	0.022	0.022	0.022	0.023	0.023	0.023	0.082	0.088	0.092	0.096
600	0.021	0.021	0.021	0.021	0.021	0.021	0.021	0.021	0.021	0.021	0.087	0.091	0.096	0.101	0.104
550	0.020	0.020	0.020	0.020	0.020	0.020	0.020	0.020	0.020	0.019	0.095	0.101	0.105	0.109	0.113
500	0.019	0.019	0.019	0.019	0.019	0.019	0.019	0.018	0.018	0.103	0.105	0.111	0.114	0.119	0.122
450	0.018	0.018	0.018	0.018	0.017	0.017	0.017	0.017	0.115	0.116	0.118	0.123	0.127	0.131	0.135
400	0.016	0.016	0.016	0.016	0.016	0.016	0.016	0.016	0.131	0.132	0.134	0.138	0.143	0.147	0.150
350	0.015	0.015	0.015	0.015	0.015	0.015	0.015	0.152	0.153	0.154	0.155	0.160	0.164	0.168	0.171
300	0.014	0.014	0.014	0.014	0.014	0.014	0.182	0.183	0.183	0.184	0.185	0.190	0.194	0.198	0.201
250	0.013	0.013	0.013	0.013	0.013	0.228	0.228	0.228	0.228	0.229	0.231	0.235	0.238	0.242	0.245
200	0.012	0.012	0.012	0.012	0.300	0.300	0.300	0.300	0.301	0.301	0.303	0.306	0.310	0.313	0.316
150	0.011	0.011	0.427	0.427	0.427	0.427	0.427	0.427	0.427	0.428	0.429	0.431	0.434	0.437	0.439
100	0.680	0.680	0.680	0.680	0.680	0.680	0.680	0.680	0.680	0.680	0.680	0.681	0.682	0.683	0.683
50	1.299	1.299	1.299	1.299	1.299	1.299	1.299	1.299	1.299	1.298	1.296	1.289	1.284	1.279	1.275
32	1.753	1.753	1.753	1.753	1.753	1.753	1.753	1.752	1.751	1.749	1.745	1.733	1.723	1.713	1.705

Values directly below undescored viscosities are for water.
©Critical point.
Reprinted by permission by Crane Co., Technical Paper No. 410

Table 6-19

Heat Loss, Q_L, BTU/hr-ft^2-°F

ΔT	Surface	Wind			
		Still Air	10 mph	20 mph	30 mph
60°	Uninsulated	1.8	4.1	5.2	6.1
	1-in. insulation	0.18	0.2	0.14	0.21
	2-in. insulation	0.1	0.11	0.11	0.11
100°	Uninsulated	2.1	4.4	5.7	6.5
	1-in. insulation	0.18	0.2	0.21	0.21
	2-in. insulation	0.1	0.11	0.11	0.11
200°	Uninsulated	2.7	5.1	6.4	7.4
	1-in. insulation	0.19	0.21	0.22	0.22
	2-in. insulation	0.11	0.11	0.11	0.11

Table 6-20
Heat Transfer Coefficient, U, BTU/hr-ft^2-°F

Fluid Giving up Heat	Fluid Receiving Heat	State of Controlling Resistance		Typical Fluid
		Free Convection, U	Forced Convection, U	
Liquid	Liquid	25–60	150–300	Water
		5–10	20–50	Oil
	Gas	1–3	2–10	Water to Air
	Boiling Liquid	20–60	50–150	Water
		5–20	25–60	Oil
Gas	Liquid	1–3	2–10	Air to Water
	Gas	0.6–2	2–6	Gas to Steam
	Boiling Liquid	1–3	2–10	Gas to Boiling Water
Condensing Vapor	Liquid	50–200	150–800	Steam to Water
		10–30	20–60	Steam to Oil
	Gas	1–2	2–10	Steam to Air
	Boiling Liquid	300–800		Steam to Water
		50–150		Steam to Oil

Source: W. H. McAdams, *Heat Transmission*, McGraw-Hill Book Co. Inc, 1942.
Reprinted by permission by Crane Co., Technical Paper No. 410
Notes:
1. Consider usual fouling for this service.
2. Maximum values of U should be used only when velocity of fluids is high and corrosion or scaling is considered negligible.
3. "Natural convection" applies to pipe coils immersed in liquids under static conditions.
4. "Forced convection" refers to coils immersed in liquids that are forced to move either by mechanical means or fluid flow.
5. The designer should be aware that a natural circulation will arise in the heating mode once the coil is turned on. This natural circulation is not to be confused with forced circulation, which is referred to as "agitated."

Table 6-21
Heat Transfer Coefficient, U, BTU/hr-ft^2-°F

Liquid	Heating Medium		
	150# Steam	10# Steam	180°F Water
Clean fats, oils, etc., 130°F	25	20	17
Clean fats, oils with light agitation	40	40	40
Glycerine, pure, 104°F	40	35	30
Toluene, 80°F	55	47.5	42.5
Methanol, 100°F	70	62	52
Water, soft, 80°F	85	72	66
Water, soft, 160°F	105	82	
Water, soft, boiling	175	108	
Water, hard, 150°F	120	100	

Table 6-22
Heat Transfer Coefficient, U, BTU/hr-ft^2-°F

Heating Applications		Clean Surface Coefficients		Design Coefficients	
Hot Side	**Cold Side**	**Natural Convection**	**Forced Convection**	**Natural Convection**	**Forced Convection**
Steam	Watery solution	250–500	300–550	125–225	150–275
Steam	Light oils	50–70	110–140	40–45	60–110
Steam	Medium lube oils	40–60	100–130	25–40	50–100
Steam	Bunker "C" or #6 fuel oil	20–40	70–90	10–30	60–80
Steam	Tar or asphalt	15–35	50–70	15–25	40–60
Steam	Molten sulfur	35–45	60–80	4–15	50–70
Steam	Molten paraffin	35–45	45–55	25–35	40–50
Steam	Air or gases	2–4	5–10	1–3	4–8
Steam	Molasses or corn syrup	20–40	70–90	15–30	60–80
High temp., hot water	Watery solution	80–100	100–225	70–100	110–160
High temp., heat transf. oil	Tar or asphalt	12–30	45–65	10–20	30–50
Therminol	Tar or asphalt	15–30	50–60	12–20	30–50
Cooling Applications					
Cold Side	**Hot Side**				
Water	Watery solution	70–100	90–160	50–80	80–140
Water	Quench oil	10–15	25–45	7–10	15–25
Water	Medium lube oils	8–12	20–30	5–8	10–20
Water	Molasses or corn syrup	7–10	18–26	4–7	8–15
Water	Air or gases	2–4	5–10	1–3	4–8
Freon or ammonia	Watery solution	35–45	60–90	20–35	40–60

Reprinted by permission by Tranter Inc., Platecoil Division, Catalog 5-63

Notes:

1. Consider usual fouling for this service.
2. Maximum values of U should be used only when velocity of fluids is high and corrosion or scaling is considered negligible.
3. "Natural convection" applies to pipe coils immersed in liquids under static conditions.
4. "Forced convection" refers to coils immersed in liquids that are forced to move either by mechanical means or fluid flow.
5. The designer should be aware that a natural circulation will arise in the heating mode once the coil is turned on. This natural circulation is not to be confused with forced circulation, which is referred to as "agitated."

Table 6-23
Effect of Metal Conductivity on "U" Values

Application	Material	Film Coefficients		Thermal Conductivity (BTU/hr-ft^2-°F/in).	Metal Thickness (in).	U (BTU/hr-ft^2-°F)
		h_o	h_i			
Heating water with saturated steam	Copper	300	1000	2680	0.0747	229
	Aluminum	300	1000	1570	0.0747	228
	Carbon steel	300	1000	460	0.0747	223
	Stainless steel	300	1000	105	0.0747	198
Heating air with saturated steam	Copper	5	1000	2680	0.0747	4.98
	Aluminum	5	1000	1570	0.0747	4.97
	Carbon steel	5	1000	460	0.0747	4.97
	Stainless steel	5	1000	105	0.0747	4.96

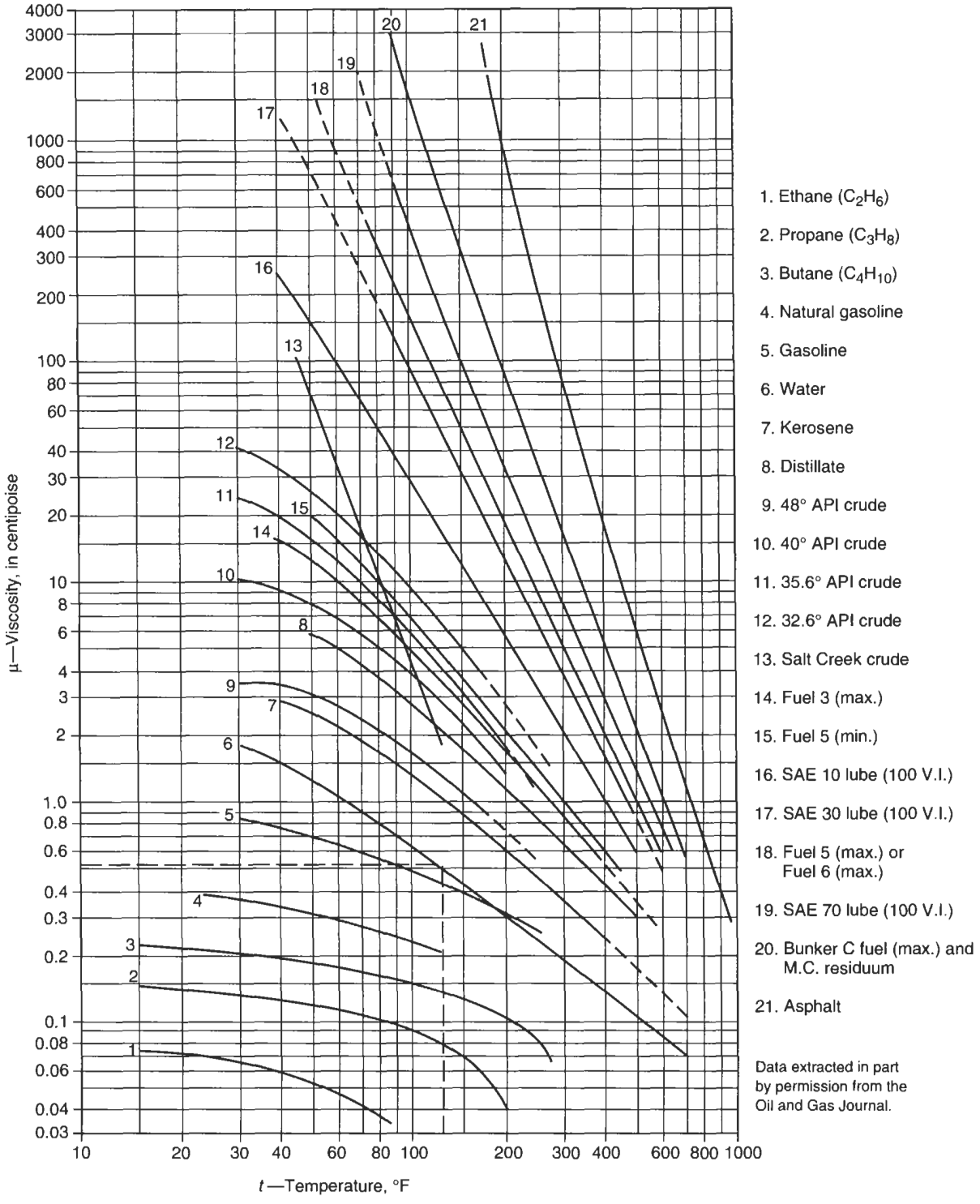

Figure 6-32. Viscosity of water and liquid petroleum products. Reprinted by permission by Crane Co., Technical Paper No. 410

PROCEDURE 6-9

FIELD-FABRICATED SPHERES

A sphere is the most efficient pressure vessel because it offers the maximum volume for the least surface area and the required thickness of a sphere is one-half the thickness of a cylinder of the same diameter. The stresses in a sphere are equal in each of the major axes, ignoring the effects of supports. In terms of weight, the proportions are similar. When compared with a cylindrical vessel, for a given volume, a sphere would weigh approximately only half as much. However, spheres are more expensive to fabricate, so they aren't used extensively until larger sizes. In the larger sizes, the higher costs of fabrication are balanced out by larger volumes.

Spheres are typically utilized as "storage" vessels rather than "process" vessels. Spheres are economical for the storage of volatile liquids and gases under pressure, the design pressure being based on some marginal allowance above the vapor pressure of the contents. Spheres are also used for cryogenic applications for the storage of liquified gases.

Products Stored

- Volatile liquids and gases: propane, butane, and natural gas.
- Cryogenic: oxygen, nitrogen, hydrogen, ethylene, helium, and argon.

Codes of Construction

Spheres are built according to ASME, Section VIII, Division 1 or 2, API 620 or BS 5500. In the United States, ASME, Section VIII, Division 1 is the most commonly used code of construction. Internationally spheres are often designed to a higher stress basis upon agreement between the user and the jurisdictional authorities. Spheres below 15 psig design pressure are designed and built to API 620.

The allowable stresses for the design of the supports is based on either AWWA D100 or AISC.

Materials of Construction (MOC)

Typical materials are carbon steel, usually SA-516-70. High-strength steels are commonly used as well (SA-537, Class 1 and 2, and SA-738, Grade B). SA-516-60 may be used to eliminate the need for PWHT in wet H_2S service. For cryogenic applications, the full range of materials has been utilized, from the low-nickel steels, stainless steels, and higher alloys. Spheres of aluminum have also been fabricated.

Liquified gases such as ethylene, oxygen, nitrogen, and hydrogen are typically stored in double-wall spheres, where the inner tank is suspended from the outer tank by straps or cables and the annular space between the tanks is filled with insulation. The outer tank is not subjected to the freezing temperatures and is thus designed as a standard carbon steel sphere.

Size, Thickness, and Capacity Range

Standard sizes range from 1000 barrels to 50,000 barrels in capacity. This relates in size from about 20 feet to 82 feet in diameter. Larger spheres have been built but are considered special designs. In general, thicknesses are limited to 1.5 in. to preclude the requirement for PWHT, however PWHT can be accomplished, even on very large spheres.

Supports

Above approximately 20 feet in diameter, spheres are generally supported on legs or columns evenly spaced around the circumference. The legs are attached at or near the equator. The plates in this zone of leg attachment may be required to be thicker, to compensate for the additional loads imposed on the shell by the supports. An internal stiffening ring or ring girder is often used at the junction of the centerline of columns and the shell to take up the loads imposed by the legs.

The quantity of legs will vary. For gas-filled spheres, assume one leg every third plate, assuming 10-feet-wide plates. For liquid-filled spheres, assume one leg every other plate.

Legs can be either cross-braced or sway-braced. Of the two bracing methods, sway-bracing is the more common. Sway-bracing is for tension-only members. Cross-bracing is used for tension and compression members. When used, cross-bracing is usually pinned at the center to reduce the sizes of the members in compression.

Smaller spheres, less than 20 feet in diameter, can be supported on a skirt. The diameter of the supporting skirt should be 0.7 × the sphere diameter.

Heat Treatment

Carbon steel spheres above 1.5-in. thickness must be PWHT per ASME Code. Other alloys should be checked for thickness requirements. Spheres are often stress relieved

for process reasons. Spheres made of high-strength carbon steel in wet H_2S service should be stress relieved regardless of thickness. When PWHT is required, the following precautions should be taken:

a. Loosen cross-bracing to allow for expansion.
b. Jack out columns to keep them level during heating and cooling.
c. Scaffold the entire vessel.
d. Weld thermocouple wires to shell external surface to monitor and record temperature.
e. Typically, internally fire it.
f. Monitor heat/cooling rate and differential temperature.

Accessories

Accessories should include a spiral stairway and a top platform to access instruments, relief valves, and vents. Manways should be used on both the top and bottom of the sphere. Nozzles should be kept as close as practical to the center of the sphere to minimize platforming requirements.

Methods of Fabrication

Field-fabricated spheres are made in one of two methods. Smaller spheres can be made by the expanded cube, soccer ball method, while larger ones are made by the orange peel method. The orange peel method consists of petals and cap plates top and bottom.

Typically all shell pieces are pressed and trimmed in the shop and assembled to the maximum shipping sizes allowable. Often, the top portion of the posts are fit up and welded in the shop to their respective petals.

Field Hydrotests

Typically the bracing on the support columns is not tightened fully until the hydrotest. While the sphere is full of water and the legs are at their maximum compression, the bracing is tightened so that once the sphere is emptied, all of the bracing goes into tension and there is the assurance that they remain in tension during service.

Settlement between the legs must be monitored during hydrotest to detect any uneven settlement between the posts. Any uneven settlement of over ½ in. between any pair of adjacent legs can cause distortion and damage to the sphere. Foundation requirements should take this requirement into consideration.

Notes

1. Spheres that operate either hot or cold will expand or contract differentially with respect to the support columns or posts. The moment and shear forces resulting from this differential expansion must be accounted for in the design of the legs.
2. The minimum clearance between the bottom of the vessel and grade is 2 ft6 in.
3. The weights shown in the tables include the weight of the sphere with an allowance for thinning (1/16 in.) and corrosion (1/8 in.) plus plate overtolerance. A clearance of 3 ft was assumed between the bottom of the sphere and the bottom of the base plate. The weights include columns, base plates, and bracing, plus a spiral stairway and top platform. Column weights were estimated from the quantities and sizes listed in the table.
4. For estimating purposes, the following percentages of the sphere shell weight should be added for the various categories:
   - Columns and base plates: 6–14%. For thicker, heavier spheres, the lower percentage should be used. For larger, thinner spheres, the higher percentage should be used.
   - Sway rods/bracing: 1–9%. Use the lower value for wind only and higher values where seismic governs. The highest value should be used for the highest seismic area.
   - Stairway, platform, and nozzles: 2–5%. Apply the lower value for minimal requirements and the higher where the requirements are more stringent.

FIELD-FABRICATED SPHERES

Notation

A = surface area, sq ft
d = OD of column legs, in.
D = diameter, ft
D_m = mean vessel diameter, ft
E = joint efficiency
E_m = modulus of elasticity, psi
N = number of support columns
n = number of equal volumes
P = internal pressure, psig
P_a = maximum allowable external pressure, psi
P_m = MAWP, psig
R = radius, ft
S = allowable stress, psi
t = thickness, new, in.
t_c = thickness, corroded, in.
t_p = thickness of pipe leg, in.
t_{rv} = thickness required for full vacuum, in.
V = volume, cu ft
W = weight, lb
w = unit weight of plate, psf

Conversion Factors

7.481 gallons/cu ft
0.1781 barrels/cu ft
5.614 cu ft/barrel
35.31 cu ft/cu meter
6.29 barrels/cu meter
42 gallons/barrel

Formulas

$$V = \frac{\pi D^3}{6} \quad \text{or} \quad V = \frac{4\pi R^3}{3}$$

$$V_n = \frac{\pi D^3}{6n} \quad \text{or} \quad V_n = \frac{4\pi R^3}{3n}$$

$$V_1 = \frac{\pi h_1^2}{3}(3R - h_1)$$

$$V_2 = \frac{\pi h_1}{6}(3r_1^2 + 3r_2^2 + h_2^2)$$

$$D = \sqrt[3]{\frac{6V}{\pi}}$$

$$A = \pi D^2 \quad \text{or} \quad A = 4\pi R^2$$

$$A_n = \pi D h_n \quad \text{or} \quad A_n = 2\pi R h_n$$

$$r_1 = \sqrt{2Rh_1 - h_1^2}$$

$$r_2 = \sqrt{R^2 - h_3^2}$$

$$\sin\alpha = \frac{r_1}{R} \qquad \alpha$$

$$W = \pi D_m^2 w$$

$$P_m = \frac{2SEt_c}{R_i + 0.2t_c}$$

$$P_a = \frac{0.0625E_m}{\left(\frac{R_o}{t_c}\right)^2}$$

$$t_r = \frac{PR_c}{2SE - 0.2P}$$

Typical Leg Attachment

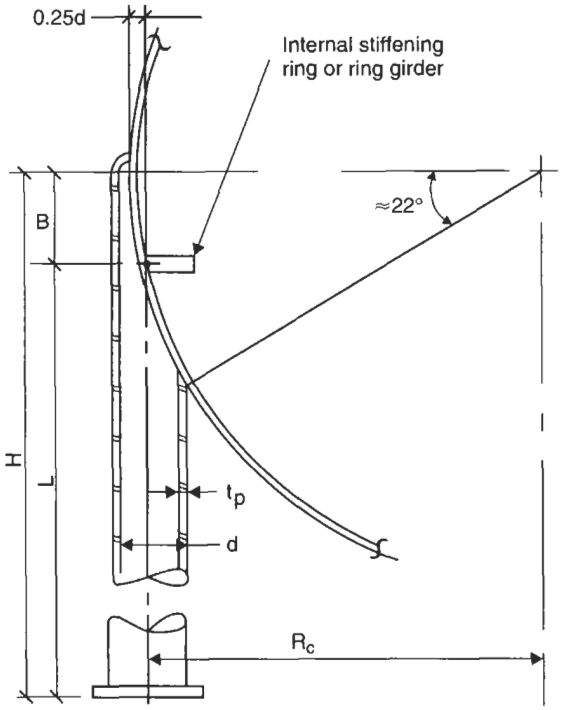

Dimensional Data

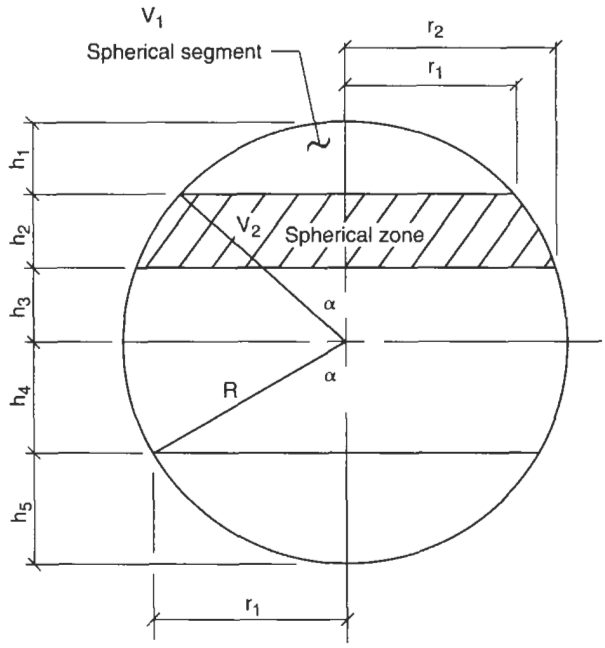

Liquid Level in a Sphere

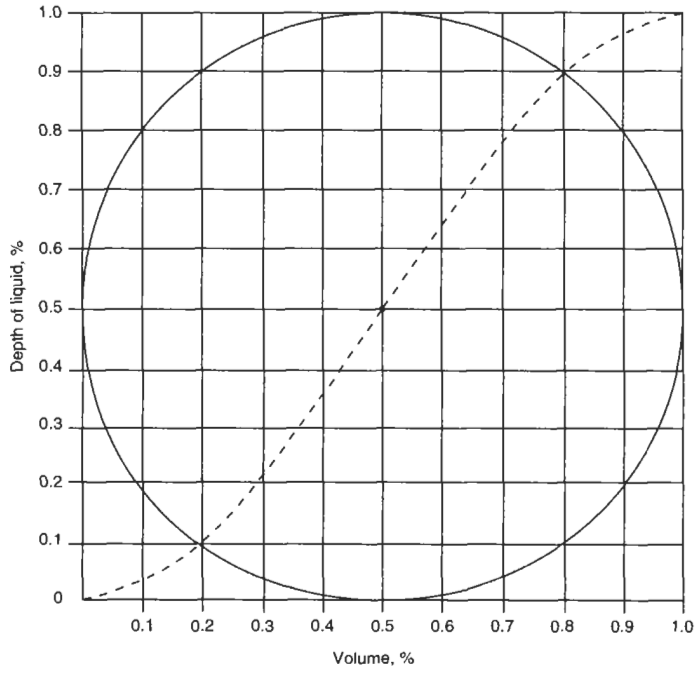

Table 6-24
Dimensions for "n" Quantity of Equal Volumes

Figure	n	V_n	r_1	r_2	h_1	h_2	h_3
	3	$\frac{\pi D^3}{18}$	0.487D	—	0.387D	0.226D	—
	4	$\frac{\pi D^3}{24}$	0.469D	—	0.326D	0.174D	—
	5	$\frac{\pi D^3}{30}$	0.453D	0.496D	0.287D	0.146D	0.067D
	6	$\frac{\pi D^3}{36}$	0.436D	0.487D	0.254D	0.133D	0.113D

Table 6-25
Volumes and Surface Areas for Various Depths of Liquid

h_4	h_5	α	r_1	V_5	V_4	A_5	A_4
0.05D	0.45D	25.84	0.218D	$0.0038D^3$	$0.2580D^3$	$0.1571D^2$	$1.4137D^2$
0.10D	0.40D	36.87	0.300D	$0.0147D^3$	$0.2471D^3$	$0.3142D^2$	$1.2567D^2$
0.15D	0.35D	45.57	0.357D	$0.0318D^3$	$0.2300D^3$	$0.4712D^2$	$1.1000D^2$
0.20D	0.30D	53.13	0.400D	$0.0545D^3$	$0.2073D^3$	$0.6283D^2$	$0.9425D^2$
0.25D	0.25D	60.0	0.433D	$0.0818D^3$	$0.1800D^3$	$0.7854D^2$	$0.7854D^2$
0.30D	0.20D	66.42	0.458D	$0.1131D^3$	$0.1487D^3$	$0.9425D^2$	$0.6283D^2$
0.35D	0.15D	72.54	0.477D	$0.1475D^3$	$0.1143D^3$	$1.1000D^2$	$0.4712D^2$
0.40D	0.10D	78.46	0.490D	$0.1843D^3$	$0.0775D^3$	$1.2567D^2$	$0.3141D^2$
0.45D	0.05D	84.26	0.498D	$0.2227D^3$	$0.0391D^3$	$1.4137D^2$	$0.1571D^2$
0.50D	0D	90.0	0.500D	$0.2618D^3$	$0D^3$	$1.5708D^2$	$0D^2$

Types of Spheres

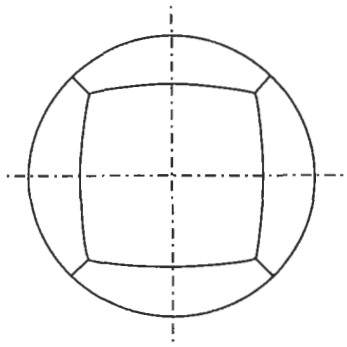

Expanded Cube, Square Segment, or Soccer Ball Type

- Small spheres only
- Sizes less than about 20 feet in diameter
- Volumes less than 750 bbls

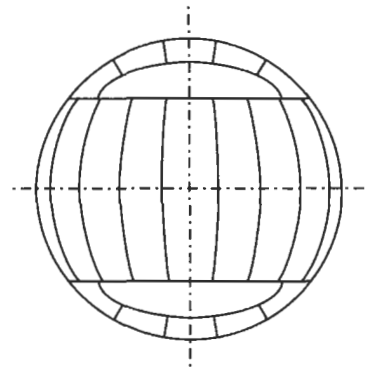

Partial Soccer Ball Type

- Combines orange peel and soccer ball types
- Sizes 30 to 62 feet in diameter
- Volumes 2200 to 22,000 bbls

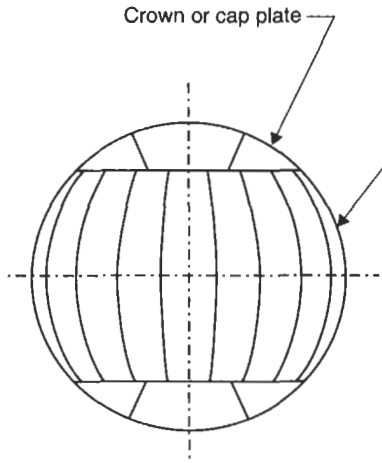

Meridian, Orange Peel, or Watermelon Type (3-Course Version)

- Consists of crown plates and petal plates
- Sizes 20 to 32 feet in diameter
- Volumes 750 to 3000 bbls

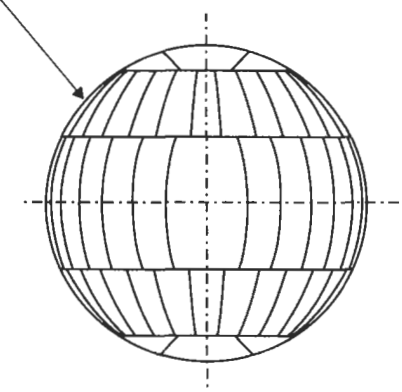

Meridian, Orange Peel, or Watermelon Type (5-Course Version)

- Consists of crown plates and petal plates
- Sizes up to 62 feet in diameter
- Volumes to 22,000 bbls

Table 6-26
Data for 50-psig Sphere

D	t	Volume			A	W	N	d	t_p	P_q	t_{rv}
		bbl—nom	bbl's	ft^3							
20 in.-0 ft	0.3125	750	746	4188	1256	23.5	4	16	0.25	4.4	0.5
22 in.-3 ft	0.375	1000	1027	5767	1555	32.8	4	16	0.25	6.32	0.5625
25 in.-0 ft	0.375	1500	1457	8181	1963	41	4	16	0.25	5.01	0.5625
25 in.-6 ft	0.375	1500	1546	8682	2043	42.7	4	16	0.25	4.82	0.5625
28 in.-0 ft	0.375	2000	2047	11,494	2463	52.2	5	16	0.25	4	0.625
30 in.-3 ft	0.4375	2500	2581	14,494	2875	68.8	5	16	0.25	5.35	0.6875
32 in.-0 ft	0.4375	3000	3055	17,157	3217	78	6	18	0.25	4.78	0.6875
35 in.-0 ft	0.4375	3000	3998	22,449	3848	93.4	6	18	0.25	4	0.75
35 in.-3 ft	0.4375	4000	4084	22,934	3904	94.7	6	20	0.25	2.52	0.75
38 in.-0 ft	0.5	5000	5116	28,731	4536	123	6	22	0.25	4.88	0.8125
40 in.-0 ft	0.5	6000	5968	33,510	5027	138	6	22	0.25	4.41	0.8125
40 in.-6 ft	0.5	6000	6195	34,783	5153	142.3	7	24	0.25	4.3	0.875
43 in.-6 ft	0.5625	7500	7676	43,099	5945	181	7	24	0.29	5.07	0.875
45 in.-0 ft	0.5625	8500	8497	47,713	6362	193.6	7	24	0.29	4.74	0.9375
48 in.-0 ft	0.5625	10,000	10,313	57,906	7238	222.2	8	28	0.3	4.17	1
50 in.-0 ft	0.625	11,500	11,656	65,450	7854	269.4	8	28	0.3	5.01	1
51 in.-0 ft	0.625	12,500	12,370	69,456	8171	280.2	9	30	0.29	4.82	1
54 in.-9 ft	0.625	15,000	15,304	85,931	9417	326.8	9	32	0.344	4.18	1.0625
55 in.-0 ft	0.625	15,000	15,515	87,114	9503	330.6	9	32	0.344	4.15	1.125
60 in.-0 ft	0.6875	20,000	20,142	113,097	11,310	430.5	9	32	0.344	4.41	1.1875
60 in.-6 ft	0.6875	20,000	20,650	115,948	11,500	438.2	10	34	0.38	4.34	1.1875
62 in.-0 ft	0.6875	22,000	22,225	124,788	12,076	458.8	10	34	0.38	4.13	1.25
65 in.-0 ft	0.75	25,000	25,610	143,793	13,273	551.5	11	36	0.406	4.64	1.25
69 in.-0 ft	0.75	30,000	30,634	172,007	14,957	629.2	11	40	0.438	4.12	1.375
76 in.-0 ft	0.8125	40,000	40,936	229,847	18,146	874.1	12	42	0.503	4.11	1.5
81 in.-10 ft	0.875	50,000	51,104	286,939	21,038	1105	13	42	0.594	3.54	1.625
87 in.-0 ft	0.9375	60,000	61,407	344,791	23,779	1460	14	48	0.75	4.38	1.75

Note: Values are based on the following:

1. Material SA-516-70, S = 20,000 psi.
2. Joint efficiency, E = 0.85.
3. Corrosion allowance, c.a. = 0.125.

Table 6-27
Weights of Spheres, kips

Dia. (ft)	Thickness (in.)											
	0.375	0.4375	0.5	0.5625	0.625	0.6875	0.75	0.8125	0.875	0.9375	1	1.125
20 in.-0 ft	26.8	30	[33.3]	36.5	39.8	43	46.3	49.5	52.7	55.9		
22 in.-6 ft	32.8	36.8	40.9	[45]	49	53.1	57.2	61.2	65.3	69.3		
25 in.-0 ft	41	46	51	[56]	61	66.1	71.1	76.1	81.1	86		
27 in.-6 ft	***48***	54.1	60.1	66.2	[72.3]	78.3	84.4	90.4	96.5	103		
30 in.-0 ft	60	66	73.2	80.4	87.6	[94.8]	102	109	117	124	131	
32 in.-6 ft	71.5	80	88.5	97	105	[114]	122	131	139	148	156	
35 in.-0 ft	81.1	***93.4***	103	113	123	133	[143]	152	162	172	182	202
37 in.-6 ft	98.3	110	121	132	143	155	166	[177]	189	200	211	234
40 in.-0 ft	105	122	***138***	151	164	177	189	[202]	215	228	241	266
42 in.-6 ft	129	143	158	172	187	201	216	230	[245]	259	274	303
45 in.-0 ft	145	161	177	194	210	226	242	259	275	[291]	307	340
47 in.-6 ft	161	179	197	***215***	233	251	269	287	305	324	[342]	378
50 in.-0 ft		209	229	249	269	289	309	330	350	370	[390]	430
52 in.-6 ft		234	256	278	300	322	344	366	388	411	433	[477]
55 in.-0 ft			282	306	***331***	355	379	403	428	452	476	[525]
57 in.-6 ft			313	340	366	393	419	446	472	499	525	578
60 in.-0 ft				373	402	431	459	488	517	546	575	633
62 in.-6 ft				399	431	***462***	493	525	556	587	619	650
65 in.-0 ft					484	518	552	585	619	653	687	755
69 in.-0 ft					553	591	***629***	667	706	744	782	858
76 in.-0 ft						782	828	***874***	920	967	1013	1106
81 in.-10 ft						944	998	1051	***1105***	1159	1212	1320
87 in.-0 ft							1278	1339	1400	***1460***	1521	1642

Notes:

1. Values that are underlined indicate 50-psig internal pressure design.
2. Values in brackets [ ] indicate full vacuum design.

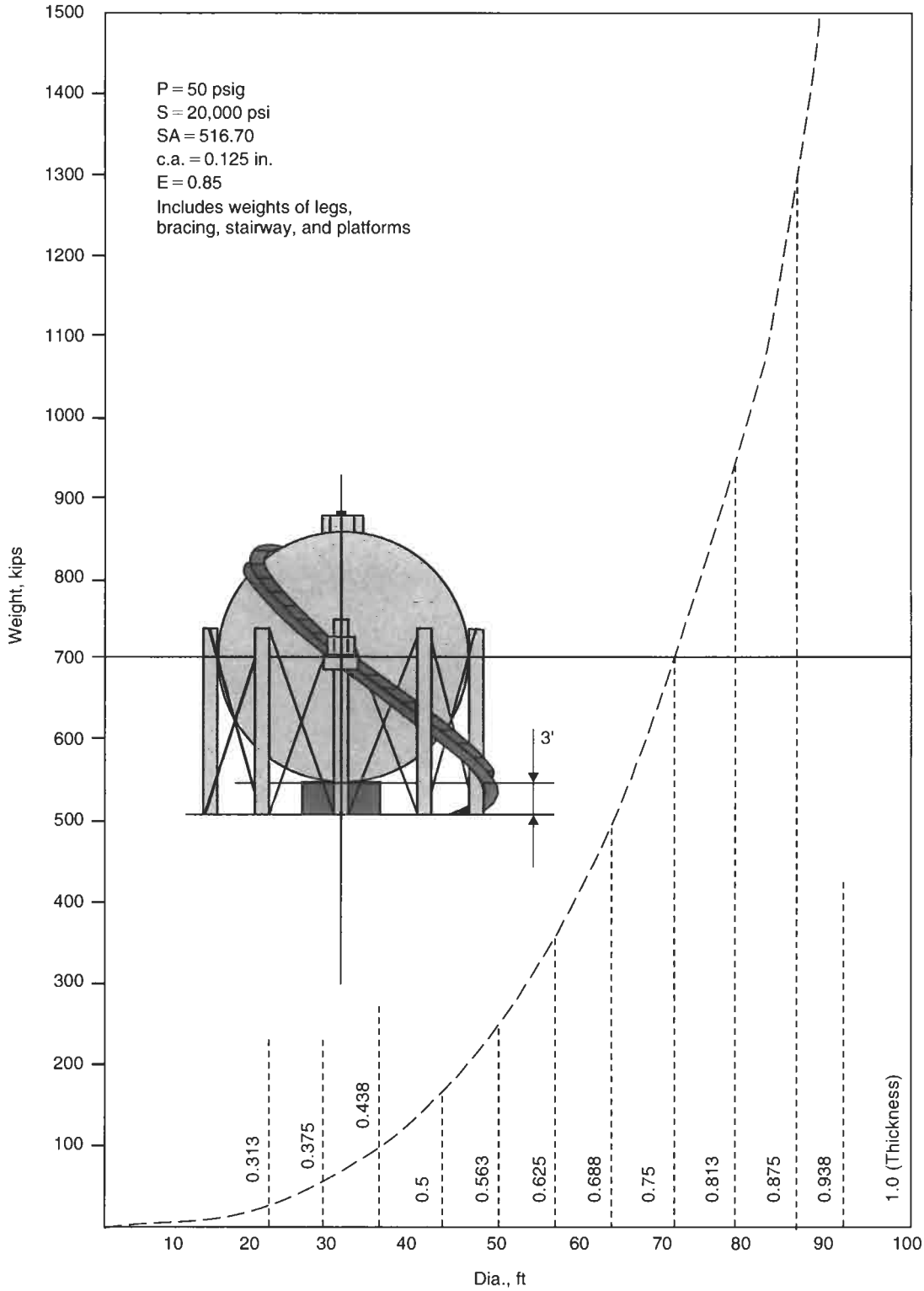

Figure 6-33. Weight of Sphere.

REFERENCES

1. Magnusson, I., "Design of Davits," Fluor Engineers, Inc., Irvine, Ca.
2. Roark, R. J., *Formulas for Stress and Strain*, 3rd edition, McGraw-Hill Book Co., 1954, Article 44, p 146.
3. Naberhaus, E. Paul, "Structural Design of Bins," *Chemical Engineering*, February 15, 1965, pp. 183–186.
4. Lambert, F. W., "The Theory and Practical Design of Bunkers," British Constructional Steelwork Association, Ltd., London.
5. API-620, *Recommended Rules for Design and Construction of Large, Welded, Low-Pressure Storage Tanks*, 9th Edition, September 1996.
6. AWWA D100-84, Welded Steel Tanks for Water Storage.
7. API 650, *Welded Steel Tanks for Oil Storage*, 9th Edition, November 1993.
8. Gaylord, E. H., and Gaylord, C. N. (Eds.), "Steel Tanks," from *Structural Engineering Handbook*, McGraw-Hill, Inc., 1968, section 23.
9. Ketchum, M. S., *Walls, Bins, and Grain Elevators*, 3rd Edition, McGraw-Hill Book Co., 1929.
10. Ackley, E. J., "Film Coefficient of Heat Transfer for Agitated Process Vessels," *Chemical Engineering*, August 22, 1960.
11. Stuhlbarg, D., "How to Design Tank Heating Coils," *Petroleum Refiner*, April 1959.
12. Steve, E. H., "Refine Temperature Control in an Odd-Shaped Vessel," *Hydrocarbon Processing*, July 1999.
13. Bisi, F., and Menicatti, S., "How to Calculate Tank Heat Losses," *Hydrocarbon Processing*, February 1967.
14. Kumana, J. D., and Kothari, S. P., "Predict Storage Tank Heat Transfer Precisely," *Chemical Engineering*, March 22, 1982.
15. Kern, D. Q., *Process Heat Transfer*, McGraw-Hill, 1950.
16. Bondy, F., and Lippa, S., "Heat Transfer in Agitated Vessels," *Chemical Engineering*, April 4, 1983.
17. *Steam, Its Generation and Use*, 40th edition, Babcock and Wilcox Company, 1992, section 3-12.
18. "Flow of Fluids through Valves, Fittings and Pipe," Crane Company, Technical Paper No. 410.

7
Transportation and Erection of Pressure Vessels

PROCEDURE 7-1

TRANSPORTATION OF PRESSURE VESSELS

The transportation of a pressure vessel by ship, barge, road, or rail will subject the vessel to one-time-only stresses that can bend or permanently deform the vessel if it is not adequately supported or tied down in the right locations. The shipping forces must be accounted for to ensure that the vessel arrives at its destination without damage.

It is very frustrating for all the parties involved to have a load damaged in transit and to have to return it to the factory for repairs. The cost and schedule impacts can be devastating if a vessel is damaged in transit. Certain minimal precautions can avoid the costly mistakes that often lead to problems. Even when all precautions are made, however, there is still the potential for damage due to unforseen circumstances involved in the shipping and handling process.

Care should be taken to ensure that the size and location of the shipping saddles, tie-downs, or lashing are adequate to hold the vessel but not deform the vessel. Long, thin-walled vessels, such as trayed columns, are especially vulnerable to these shipping forces. The important thing to remember is that someone must take the responsibility. The barge and rail people have their own concerns with regard to loading and lashing. These may or may not coincide with the concerns of the vessel designer.

The shipping forces for ships, barges, trucks, and rail are contained in this procedure. Each method of transportation has its own unique load schemes and resulting forces. Barge shipping forces will differ from rail due to the rocking motion of the seas. Rail shipments, however, go around corners at high speed. In addition, rail forces must allow for the "humping" of rail cars when they are joined with the rest of the train. Ocean shipments have to resist storms and waves without breaking free of their lashings.

Whereas horizontal vessels on saddles are designed for some degree of loading in that position, vertical vessels are not. The forces and moments that are used for the design of a vertical vessel assume the vessel is in its operating position. Vertical vessels should generally be designed to be put on two saddles, in a horizontal position, and transported by various means. That is the purpose of this procedure. Too often the details of transportation and erection are left in the hands of people who, though well versed in their particular field, are not pressure vessel specialists.

Often vessels are transported by multiple means. Thus there will be handling operations between each successive mode of transportation. Often a vessel must be moved by road to the harbor and then transferred to a barge or ship. Once it reaches its destination, it must be reloaded onto road or rail transport to the job site. There it will be offloaded and either stored or immediately erected. A final transport may be necessary to move the vessel to the location where it will be finally erected. At each handling and transport phase there are different sets of forces exerted on the vessel that must be accounted for.

Shipping Saddles

The primary concern of the vessel designer is the location and construction of the shipping saddles to take these forces without overstressing or damaging the vessel. If saddles are to be relocated by the transporter, it is important that the new locations be reviewed. Generally only two shipping saddles should be used. However, this may not always be possible. Remember that the reason for using two saddles is that more than two saddles creates a statically indeterminate structure. You are never assured that any given saddle is going to take more than its apportioned load.

Here are some circumstances that would allow for more than two saddles to be used or for a special location of two saddles:

- Transporter objects due to load on tires.
- Transporter objects due to load on barge or ship.
- Very thin, long vessel.

- Heavy-walled vessels for spreading load on ship or transporters.

Shipping saddles can be constructed of wood or steel or combinations. The saddles should be attached to the vessel with straps or bolts so that the vessel can be moved without having to reattach the saddle. Horizontal vessels may be moved on their permanent saddles but should be checked for the loadings due to shipping forces and clearances for boots and nozzles. Shipping saddles should have a minimum contact angle of 120°, just like permanent saddles. Provisions for jacking can be incorporated into the design of the saddles to allow loading and handling operations without a crane(s).

Shipping saddles should be designed with the vessel and not left up to the transport company. In general, transportation and erection contractors do not have the capability to design shipping saddles or to check the corresponding vessel stresses for the various load cases.

Whenever possible, shipping saddles should be located adjacent to some major stiffening element. Some common stiffening elements include stiffening rings, heads (both internal and external), or cones. If necessary, temporary internal spiders can be used and removed after shipment is complete.

Key factors for shipping saddles to consider:

- Included angle.
- Saddle width.
- Type of construction.
- Lashing lugs.
- Jacking pockets.
- Method of attachment to the vessel.
- Overall shipping height allowable—check with shipper.

Recommended contact angle and saddle width:

Vessel Diameter	Contact Angle	Minimum Saddle Width
D < 13 ft-0 in.	120°	11 in.
13 ft-0 in. < D < 24 ft-0 in.	140°	17 in.
D > 24 ft-0 in.	160°	23 in.

Vessel Stresses

The stresses in the vessel shell should be determined by standard Zick's analysis. The location of shipping saddles should be determined such that the bending at the midspan and saddles is not excessive. Also, the stresses due to bending at the horn of the saddle is critical. If this stress is exceeded, the saddle angle and width of saddle should be increased. Also, move the saddle closer to the head or a major stiffening element.

Lashing

Vessels are lashed to the deck of ships and barges. In like manner they must be temporarily fixed to railcars, trailers, and transporters. Lashing should be restricted to the area of the saddle locations. Vessels are held in place with longitudinal and transverse lashings. Lashings should never be attached to small nozzles or ladder or platform clips. In some cases, lashing may be attached to lifting lugs and base rings. Lashings should not exceed 45° from the horizontal plane.

Other Key Factors to Consider

- Shipping clearances.
- Shipping orientation—pay close attention to lift lugs and nozzles.
- Shipping route.
- Lifting orientation.
- Type of transport.
- Watertight shipment for all water transportation.
- Escorts and permits.
- Abnormal loads—size and weight restrictions.
- Vessels shipped with a nitrogen purge.
- Shipping/handling plan.

Organizations That Have a Part in the Transportation and Handling of Pressure Vessels

- Vessel fabricator.
- Transport company.
- Engineering contractor.
- Railway authorities.
- Port authorities.
- Erection/construction company.
- Trailer/transporter manufacturer.
- Ship or barge captain.
- Crane company/operator.

Special Considerations for Rail Shipments

1. Any shipment may be subject to advance railroad approval.
2. Any shipment over 10 ft-6 in. wide must have railroad approval.
3. A shipping arrangement drawing is required for the following:
   a. All multiple carloads (pivot bolster required).
   b. All single carloads over 10 ft-6 in. wide.

c. All single carloads over 15 ft-0 in. ATR (above top of rail).
d. All single carloads that overhang the end(s) of the car and are over 8 ft-0 in. ATR.

4. Clearances must be checked for the following:
   a. Vessels greater than 9 ft in width.
   b. Vessels greater than 40 ft overall length.
   c. Vessels greater than 50 tons.
5. The railroad will need the following specific data as a minimum:
   a. Weight.
   b. Overall length.
   c. Method of loading.
   d. Loadpoint locations.
   e. Overhang lengths.
   f. Width.
   g. Height.
   h. Routing/route surveys.
   i. Center of gravity.
6. A swivel (pivot) bolster is required whenever the following conditions exist:
   a. Two or more cars are required.
   b. The capacity for a single car is exceeded.
   c. The overhang of a single car exceeds 15 ft.
7. Rated capacities of railcars are based on a uniformly distributed load over the entire length of the car. The capacity of a car for a concentrated load will only be a percentage of the rated capacity.
8. Rules for loads, loading, and capacities vary by carrier. Other variables include the types of cars the carrier runs, the availability, and the ultimate destination. Verify all information with the specific carrier before proceeding with the design of shipping saddles or locations.
9. For vessels that require pivot bolsters, the shipping saddles shall be adequately braced by diagonal tension/compression rods between the vessel and the saddle. The rods and clips attached to the vessel shell should be designed by the vessel fabricator to suit the specific requirements of the carrier.
10. If requested, rail bolsters can be returned to the manufacturer.
11. Loading arrangement and tie-downs will have to pass inspection by a representative of the railways and sometimes by an insurance underwriter prior to shipment.
12. Accelerometers can be installed on the vessel to monitor shipping forces during transit.
13. A rail expediter who accompanies the load should be considered for critical shipments.
14. The railroad will allow a fixed time for the cars to be offloaded, cleaned, and returned. Demurrage charges for late return can be substantial.

Outline of Methods of Vessel Shipping and Transportation

1. Road.
   a. Truck/tractor and trailer.
   b. Transporters—single or multiple, self-propelled or towed.
   c. Special—bulldozer.
   d. Frame adapters.
   e. Beams to span trailers or transporters.
   f. Rollers.
   g. Special.
2. Rail.
   a. Single car.
   b. Multiple cars.
   c. Special cars.
   d. Types of cars.
      - Flatcar.
      - Fishbelly flatcar.
      - Well car.
      - Heavy-duty car.
      - Gondola car.
3. Barge.
   a. River barge.
   b. Ocean-going barge.
   c. Lakes and canals.
4. Ships.
   a. Roll-on, roll-off type.
   b. Loading and off-loading capabilities.
   c. In-hull or on-deck.
   d. Floating cranes.
5. Other.
   a. Plane.
   b. Helicopter.
   c. Bulldozer.

Rail—Types of Cars

Notes:

1. Allowable vessel weight ranges and limits are subject to reductions under certain conditions and as noted herein.
2. Dimension A = ATR, above top of rail.

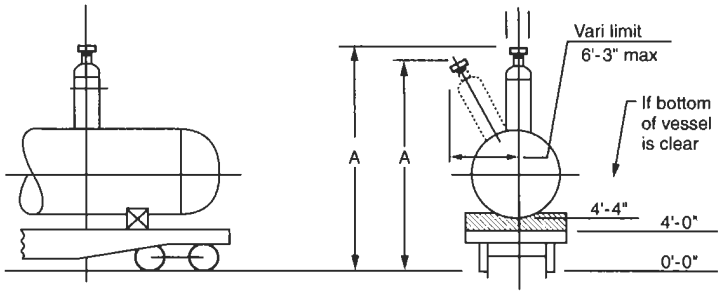

FISHBELLY FLATCAR
Vessel wt limit—140,000 lb

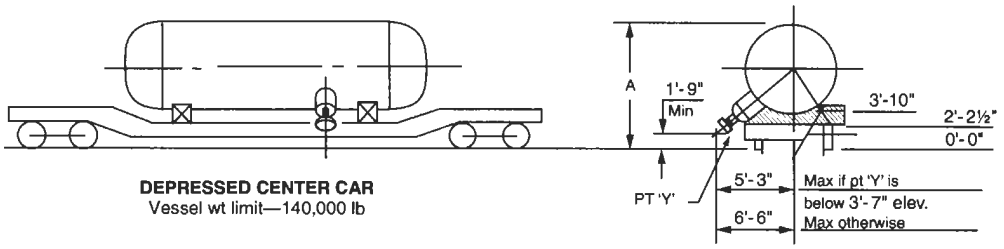

DEPRESSED CENTER CAR
Vessel wt limit—140,000 lb

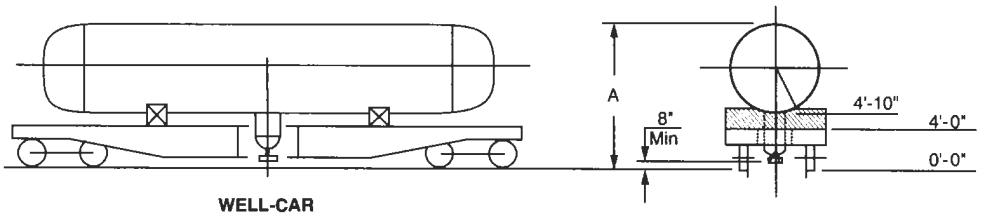

WELL-CAR
Vessel wt range (140,000 – 250,000 lb)

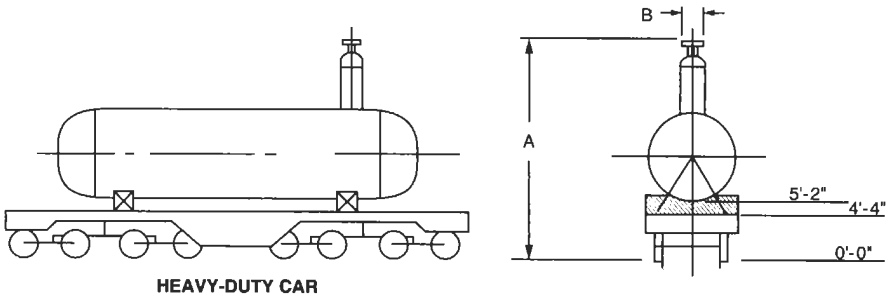

HEAVY-DUTY CAR
Vessel wt range (140,000 – 400,000 lb)

Rail—Multiple Car Loading Details

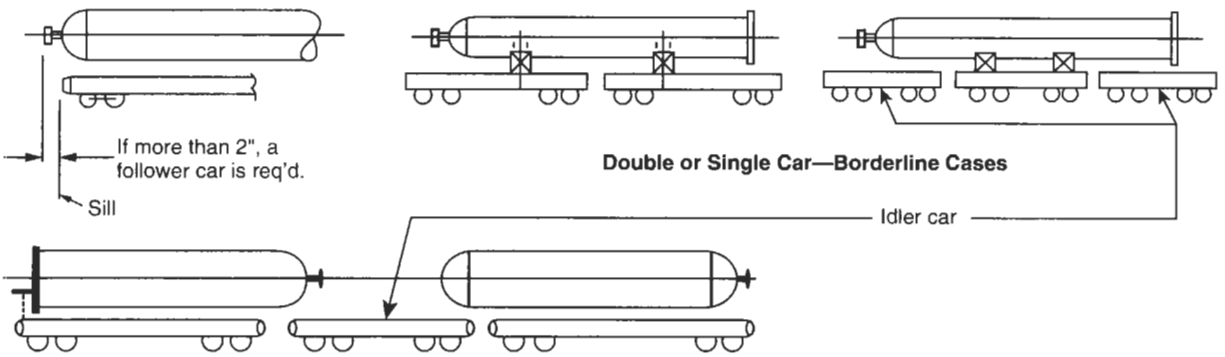

Double or Single Car—Borderline Cases

Bolster load with overhang over fourth car is acceptable. A brakewheel must be used in at least 1 of every 3 cars.

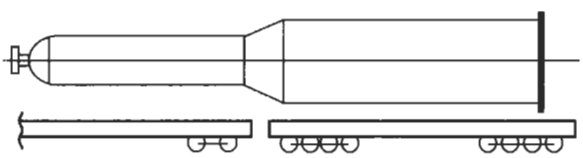

Avoid combination of dissimilar cars.

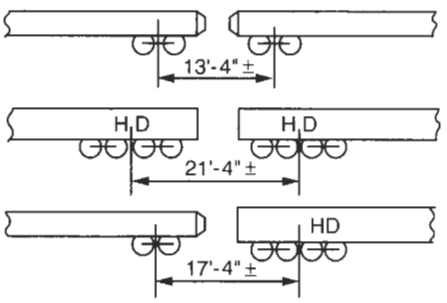

Truck Centers for Bolster Loads

Rail—Clearances

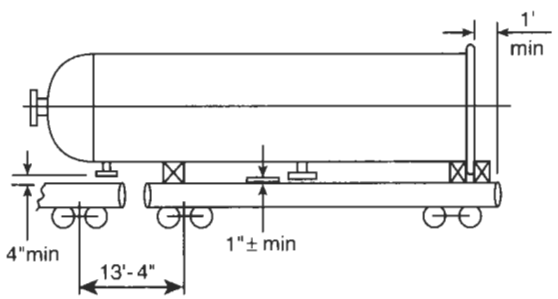

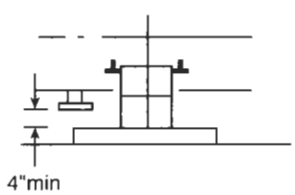

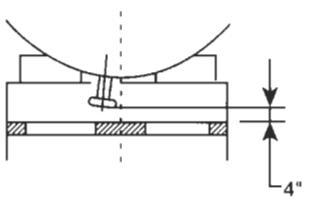

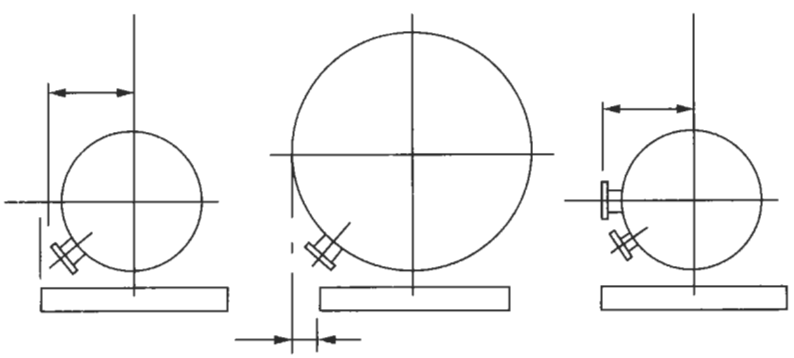

Clearance of Projections

Note: Minimum clearance to any moving part. This includes nozzles, shipping covers, or clips.

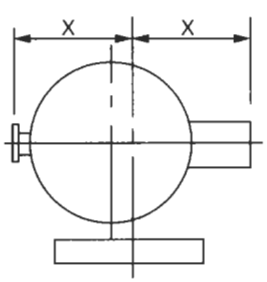

Offset Loads

Ballast may be required to offset heavy loads. "Depressed center cars" are favored for these applications.

Rail—Capacity Ratios for Concentrated Loads

1. Flatcars with both fish belly center and fishbelly side sills and all flatcars built after January 1, 1965.

Less than 18 ft	75%
18 ft or over	100%

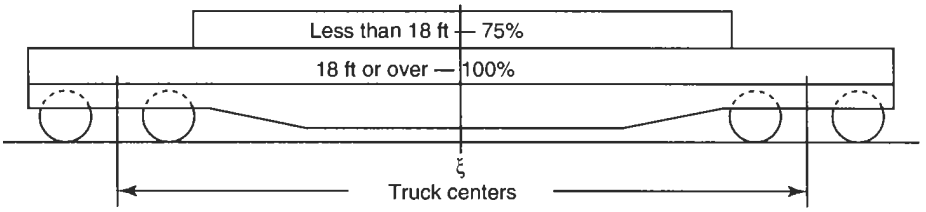

2. Flatcars not equipped with both fishbelly center and fishbelly side sills built prior to January 1,1965.

10 ft or less	66.6%
Over 10 ft to 21 ft	75%
Over 21 ft to truck centers	90%
Truck centers and over	100%

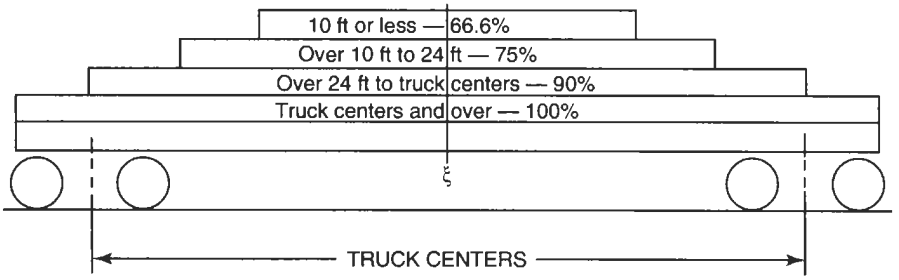

3. Gondola cars.

Less than 18 ft	75%
18 ft or less than 24 ft	87%
24 ft or over	100%

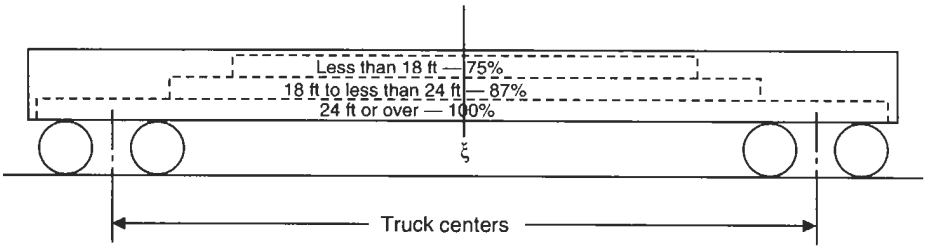

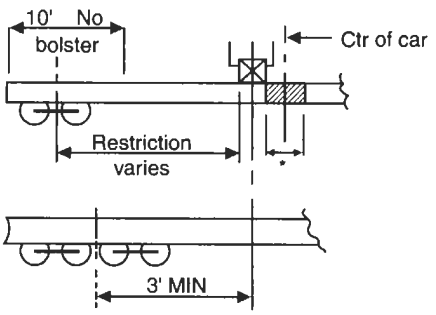

*3' restricted @ center of car to 50,000 lb except for heavy-duty cars

Bolster Locations

Rail—Details of Pivoted Bolster Loads

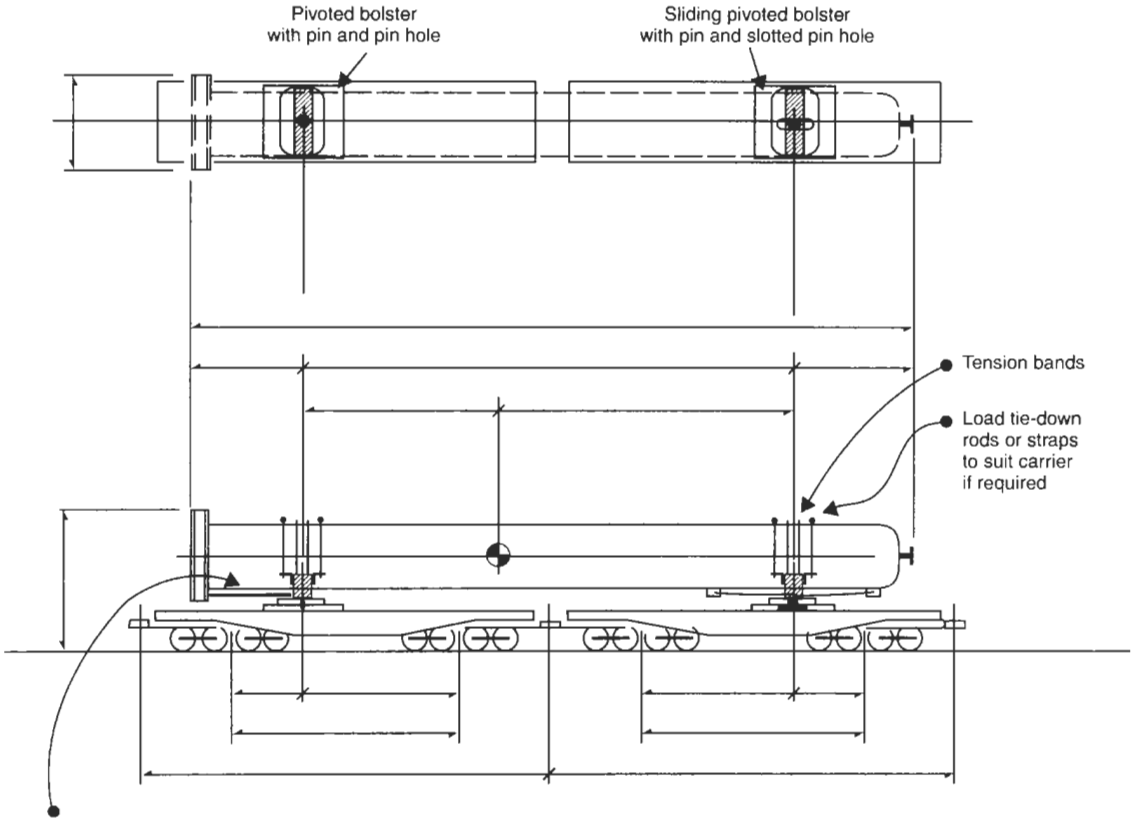

Longitudinal tie-downs are required at each saddle to suit the individual carrier. Tie-downs may consist of two brace rods, steel cables, and turnbuckles or a brace frame against the vessel base plate to take the longitudinal loads. The vessel fabricator should provide adequate clips or like attachment to the vessel for securing this bracing to the vessel shell. It is imperative that any welding to the vessel be done in the shop!

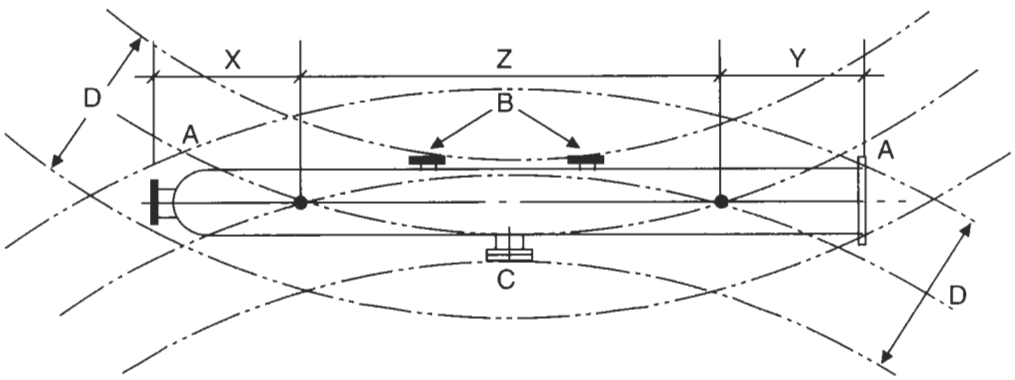

BOLSTER SETTING & CLEARANCES

1. Set X, Y, and Z so that clearance at points A, B, and C are adequate.
2. Watch relationship between bolsters and car trucks and car ends.
3. Add a minimum of 1 in. to all lateral dimensions to allow for shipping covers and small projections.
4. Dimension "D" shall be a maximum of 15 ft-5 in. of occupied space based on a 10° curve.

Details of Bolsters

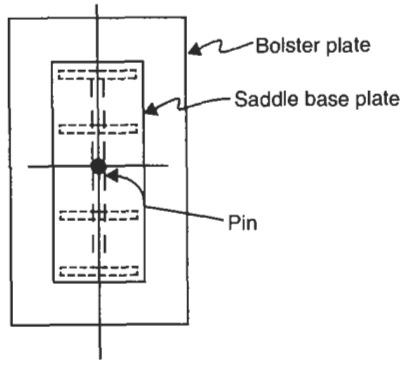

PIVOT BOLSTER
Pivots only

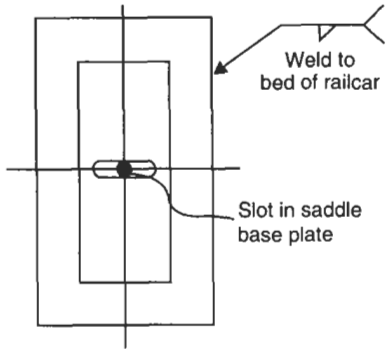

SLIDING PIVOTED BOLSTER
Allows for longitudinal and angular movement

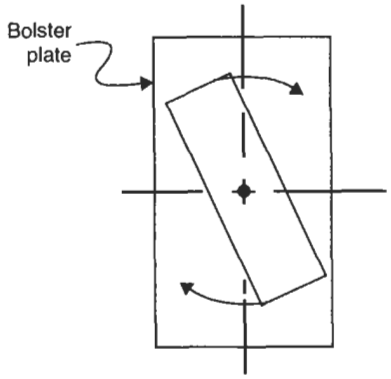

Saddle plate rotates during turns

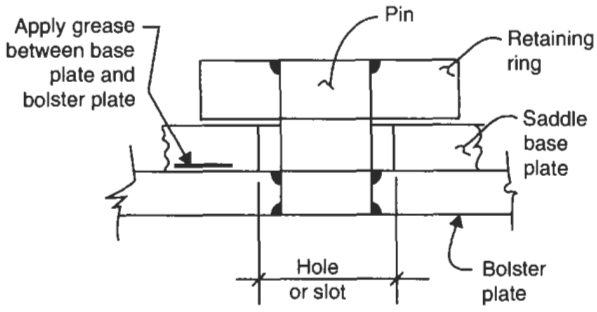

Design pin for shear based on load F_z

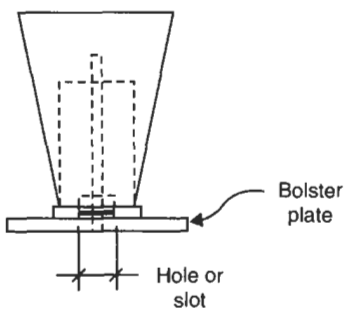

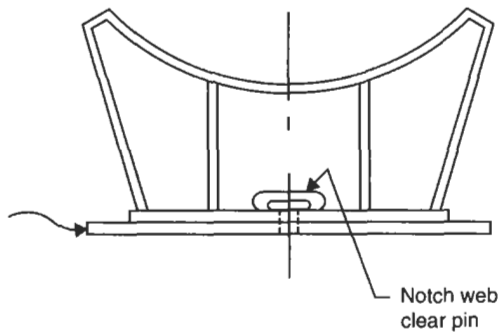

Notes:

1. Pivoting bolsters must be used for all rail shipments.
2. Pivoting bolsters must be utilized for all vessels spanning two or more railcars.
3. Design pin for shear based on full load of F_z.
4. Do not anchor the saddle plate to the bolster plate or the railway bed. The saddle plate must be free to rotate on the bolster plate. Only the bolster plate is anchored to the railway bed. The most common means of anchoring the bolster plate to the railway bed is welding. Design anchorage for a load of $\frac{1}{2}F_z$.
5. Apply grease generously between saddle base plate and bolster plate.
6. In general all clips or welds on the railcar will have to be removed, ground, and cleaned to the satisfaction of the railways prior to return.

Table 7-1
Barge Shipping Forces

Case	Condition	F_x	F_y	F_z	Diagram
	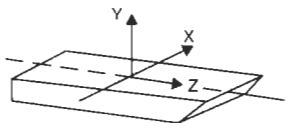 F = force due to barge motion, lb W = shipping weight, lb T = period of vibration of barge, secs				
1	Gravity	—	−1.0w	—	—
2a	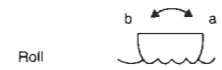	±0.45w	−0.4w	—	—
2b		±0.45w	+0.4w	—	—
3a	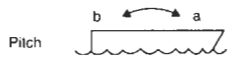	—	−1.5w	1.0w	—
3b		—	+1.5w	1.0w	—
4	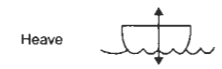	—	1.2w	—	—
5	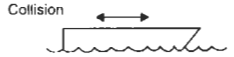	—	—	±1.5w	—
6a	Roll + Gravity	+0.95w +0.05w	−1.266w	—	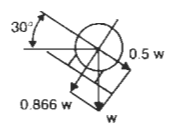
6b		−0.95w −0.05w	−0.466w	—	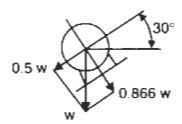
7a	Pitch + Gravity	—	−2.5w	±0.5w	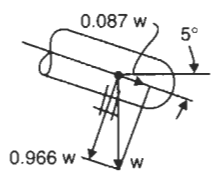
7b		—	+0.5w	±0.5w	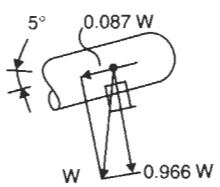

Pitch

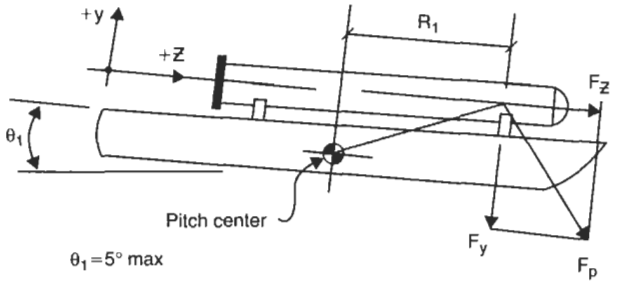

Cases 3a and 3b

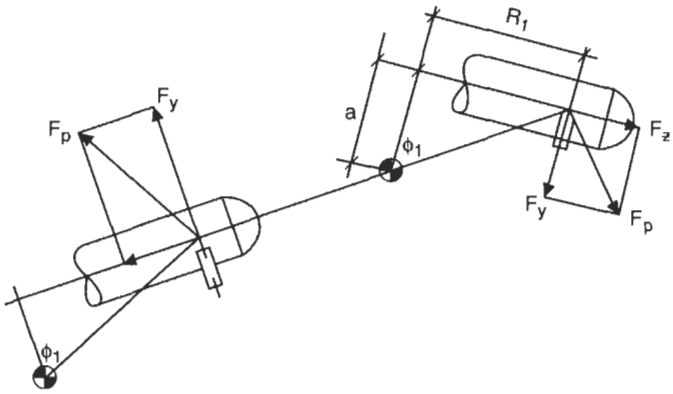

Roll

Case 2a: $\theta_2 = 30°$ max

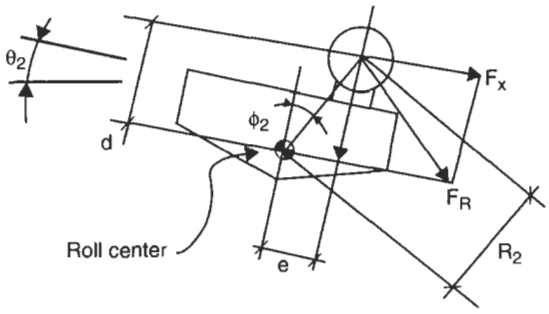

Case 2b

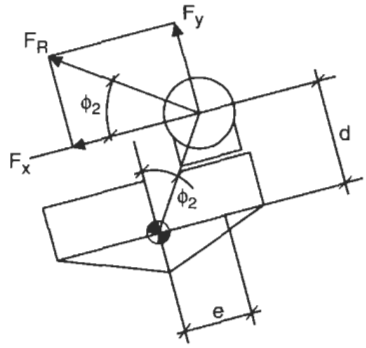

Forces in Vessel Due to Pitch

General:

$$F = ma = \left(\frac{W}{g}\right)\left(\frac{2\pi}{T}\right)^2\left(\frac{R\theta\pi}{180}\right)$$

$$F = 0.0214\frac{WR\theta}{T^2}$$

$$\phi_1 = \tan^{-1}\left(\frac{a}{R_1}\right)$$

$$F_p = \frac{0.0214WR_1\theta_1}{T_1^2}$$

Case 3a: $F_y = -F_p \sin \phi_1$ $\quad F_z = F_p \cos \phi_1$

Case 3b: $F_y = F_p \sin \phi_1$ $\quad F_z = -F_p \cos \phi_1$

Forces in Vessel Due to Roll

$$\phi_2 = \tan^{-1}\left(\frac{e}{d}\right)$$

$$R_2 = \frac{e}{\sin \phi_2}$$

$$F_R = \frac{0.0214WR_2\theta_2}{T_2^2}$$

Case 2a: $F_y = -F_R \sin \phi_2$ $\quad F_x = F_R \cos \phi_2$

Case 2b: $F_y = F_R \sin \phi_2$ $\quad F_x = -F_R \cos \phi_2$

Directions of Ship Motions

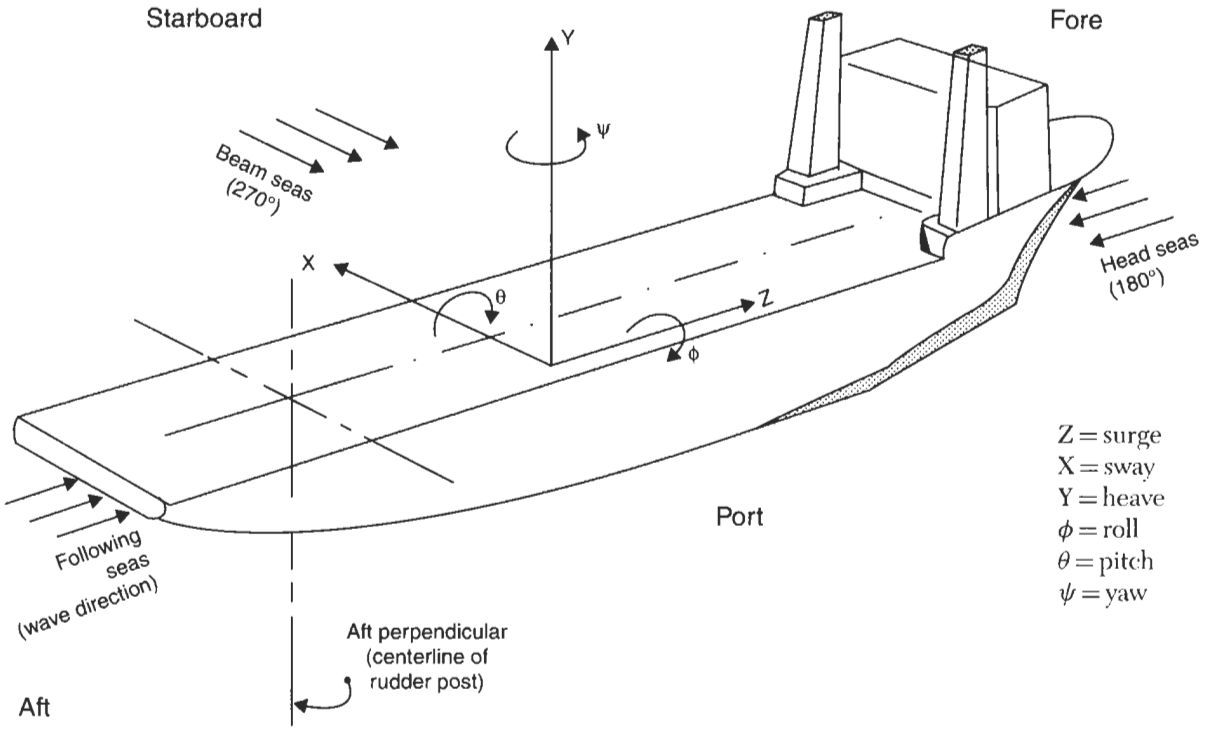

The job of the designer is to translate the loads resulting from the movement of the ship into loads applied to the pressure vessel that is stored either at or below decks. The ship itself will rotate about its own center of buoyancy (C.B.) depending on the direction of the sea and the ship's orientation to that direction of sea. The vessel strapped to its deck is in turn affected by its location in relation to the C.B. of the ship. For example, if the C.G. of the vessel is located near the C.B. of the ship, the forces are minimized. The farther apart the two are in relation to each other, the more pronounced the effect on the vessel.

The ship's movement translates into loads on the three principal axes of the vessel. Saddles and lashings must be strong enough to resist these external forces without exceeding some allowable stress point in the vessel. The point of application of the load is at the C.G. of the vessel. These loads affect the vessel in the same manner as seismic forces do. In fact, the best way to think of these loads is as vertical and horizontal seismic forces. Vertical seismic forces either add or subtract to the weight of the vessel. Horizontal seismic forces are either transverse or longitudinal.

The X, Y, and Z axes translate into and are equivalent to the following loadings in the vessel:

X axis: horizontal transverse.
Y axis: corresponds to vertical loads by either adding or subtracting from the weight of the vessel.
Z axis: longitudinal axis of the vessel. All Z axis loads are longitudinal loadings.

Load Combinations for Sea Forces

1. dead load + sway + heave + wind
2. dead load + surge + heave + wind

Forces on Truck and Rail Shipments

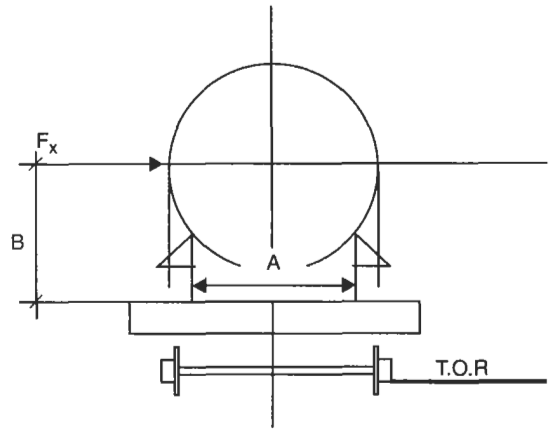

RAIL

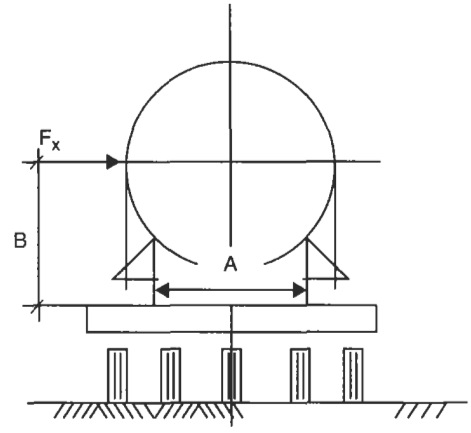

TRUCK / TRAILER

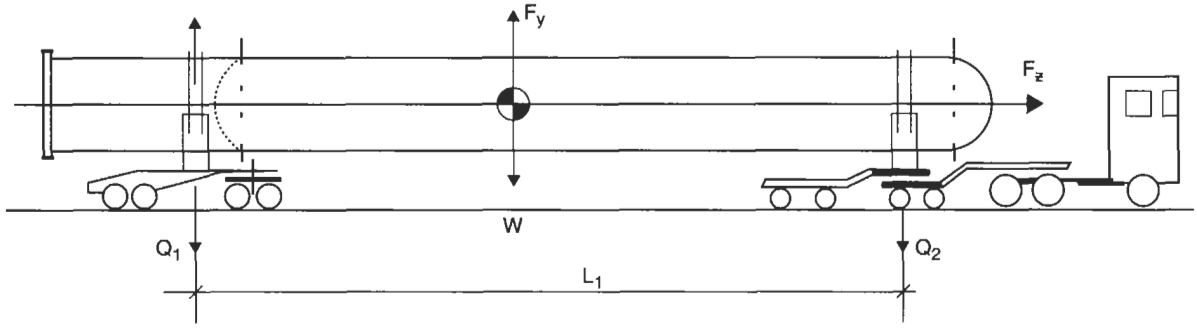

TRUCK / TRAILER

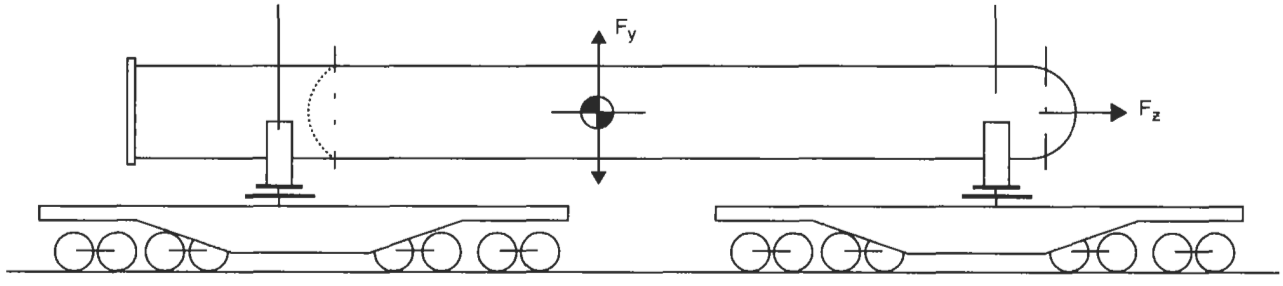

RAIL

Examples of Road Transport

If a vessel is too heavy for one trailer and too short to span two trailers, then a pair of outrigger beams can be used to span the trailers and still distribute the load to the trailers. A wide variety of trailers, self-propelled transporters, and beam configurations have been utilized for these applications. Short, squat, heavy vessels are the most common.

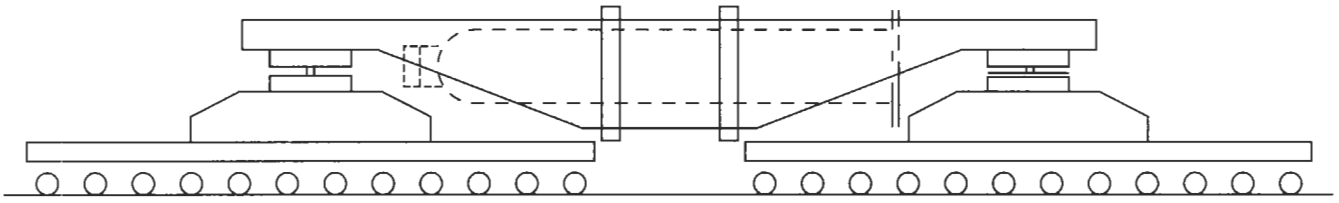

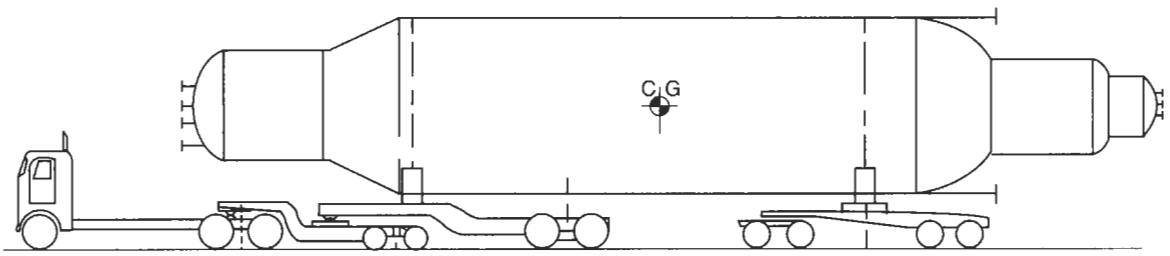

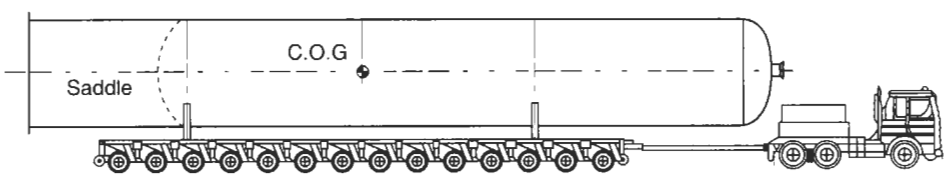

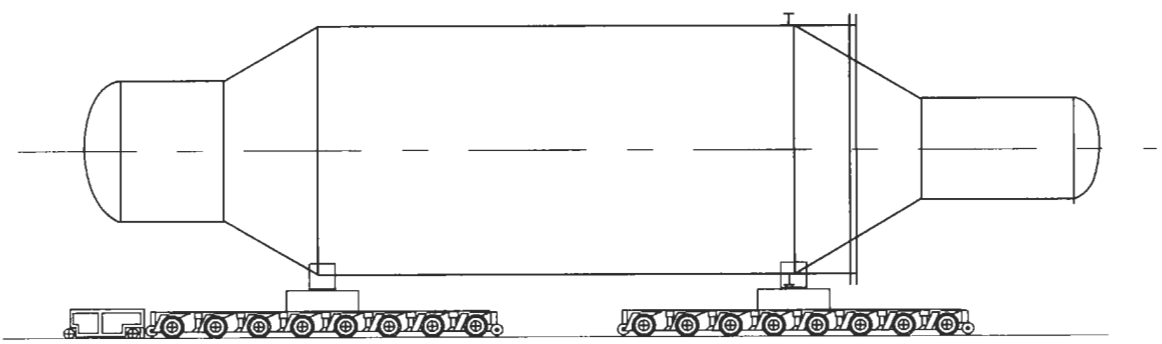

Summary of Loads/Forces on Vessels During Transportation

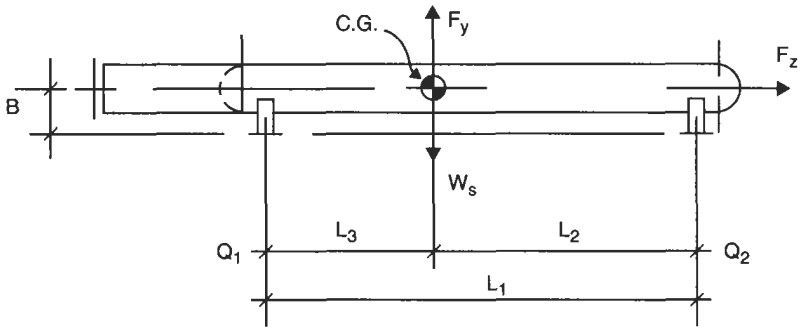

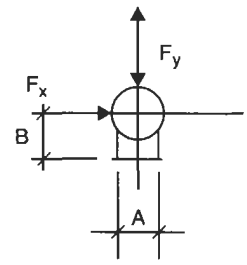

Loads F_x, F_y, $F_z = KW_s$

Verify coefficients with transport contractor/shipper.

Table 7-2
Transportation Load Coefficients, K

	Road	Rail	Barge	Ocean
F_x	0.5	1.0	0.95	1.0
F_y	1.5	2.0	1.3	1.5
F_z	1.0	1.5	1.5	1.5

Table 7-3
Load per Saddle Due to Transport Forces

Due to ···	Load per Saddle	Diagram
F_x	$Q_1 = \frac{W_s L_2}{L_1} + \frac{F_x B}{2A}$	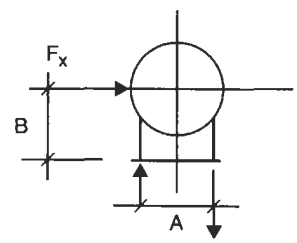
	$Q_2 = \frac{W_s L_3}{L_1} + \frac{F_x B}{2A}$	
F_y	$Q_1 = \frac{(W_s + F_y) L_2}{L_1}$	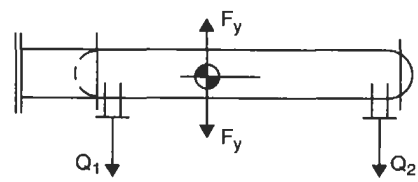
	$Q_2 = \frac{(W_s + F_y) L_3}{L_1}$	
F_z	$Q_1 = \frac{W_s L_2}{L_1} + \frac{F_z B}{L_1}$	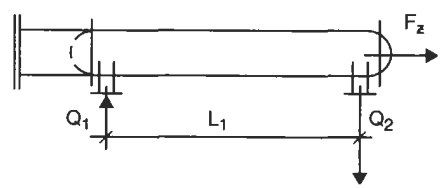
	$Q_2 = \frac{W_s L_3}{L_1} + \frac{F_z B}{L_1}$	

Shipping Saddles

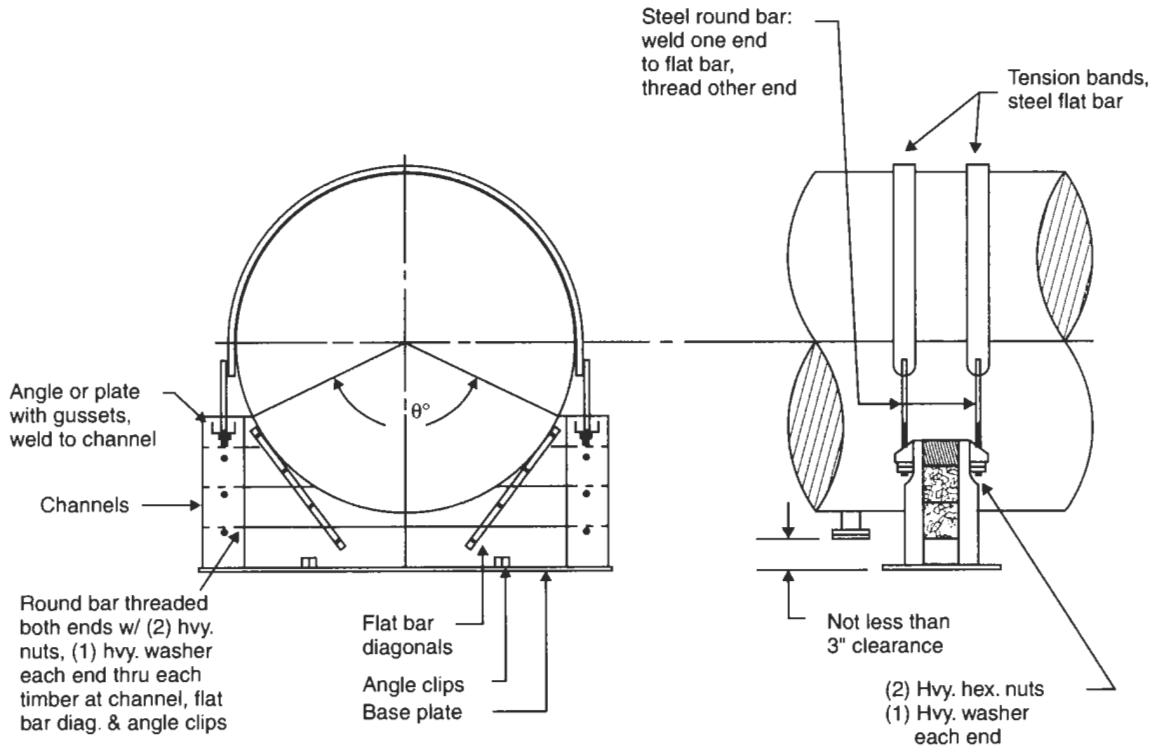

TIMBER CONSTRUCTION

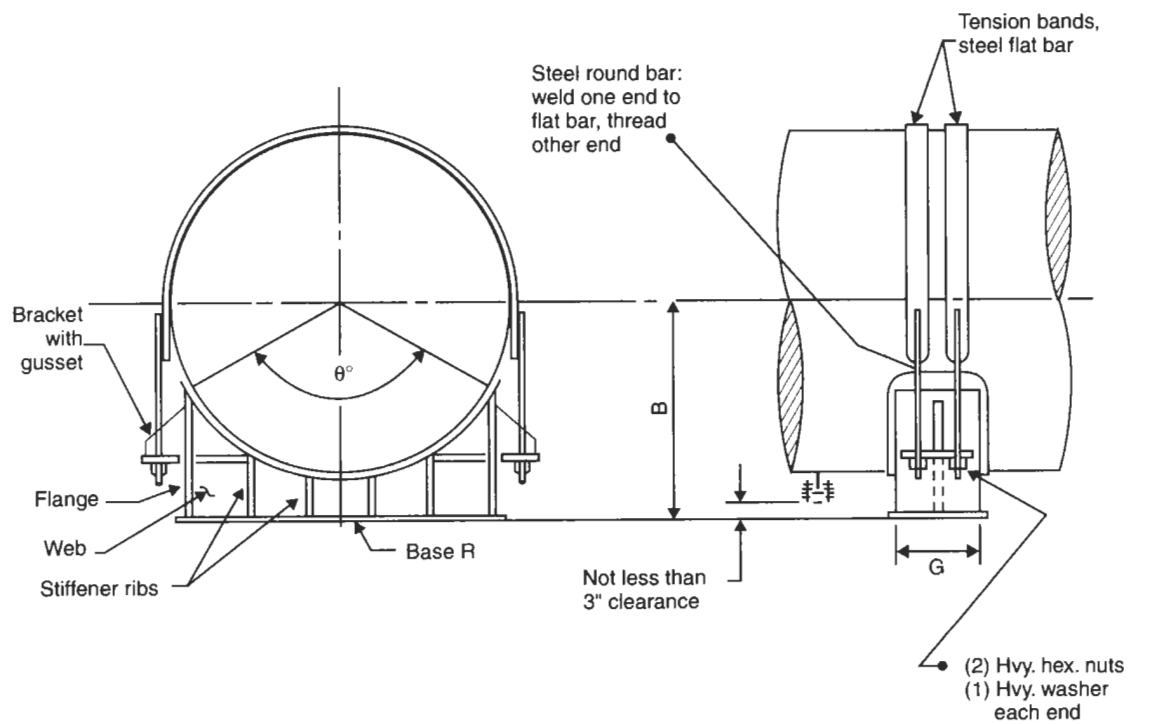

STEEL CONSTRUCTION

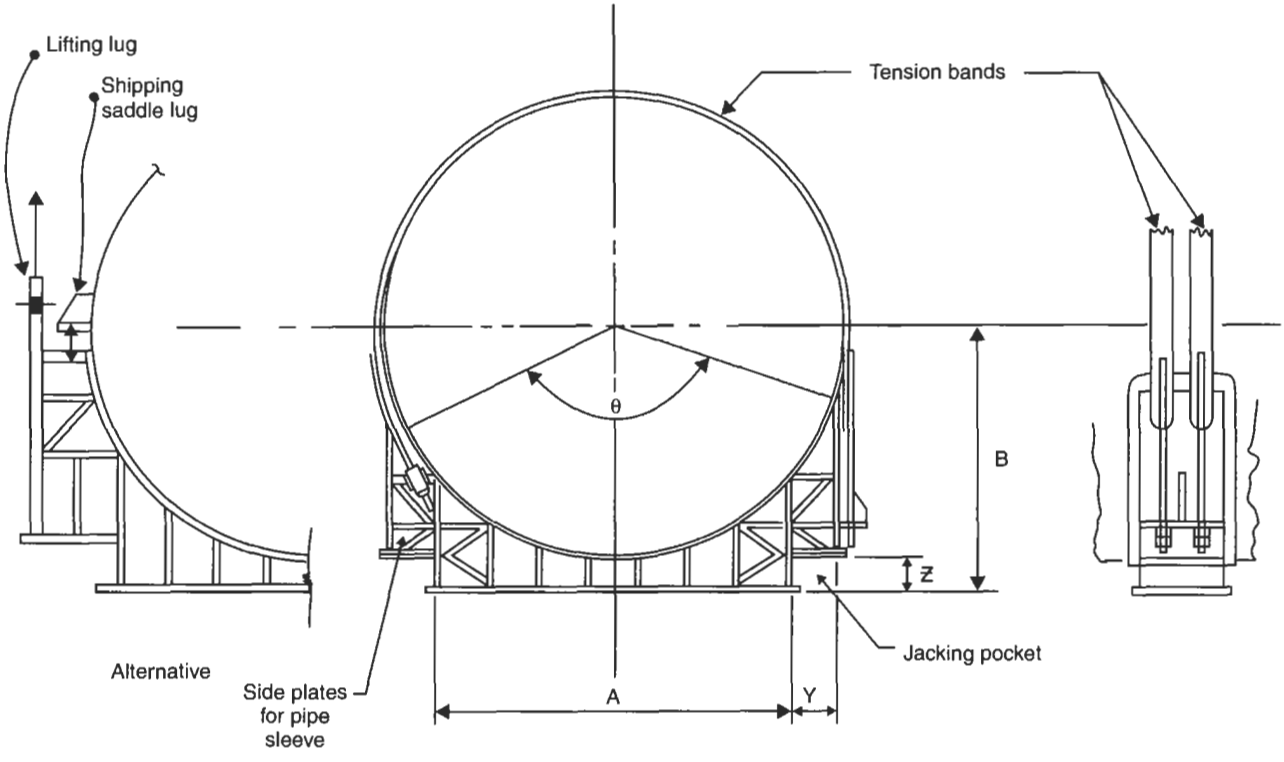

Shipping Saddle
Steel Construction with Jacking Pocket

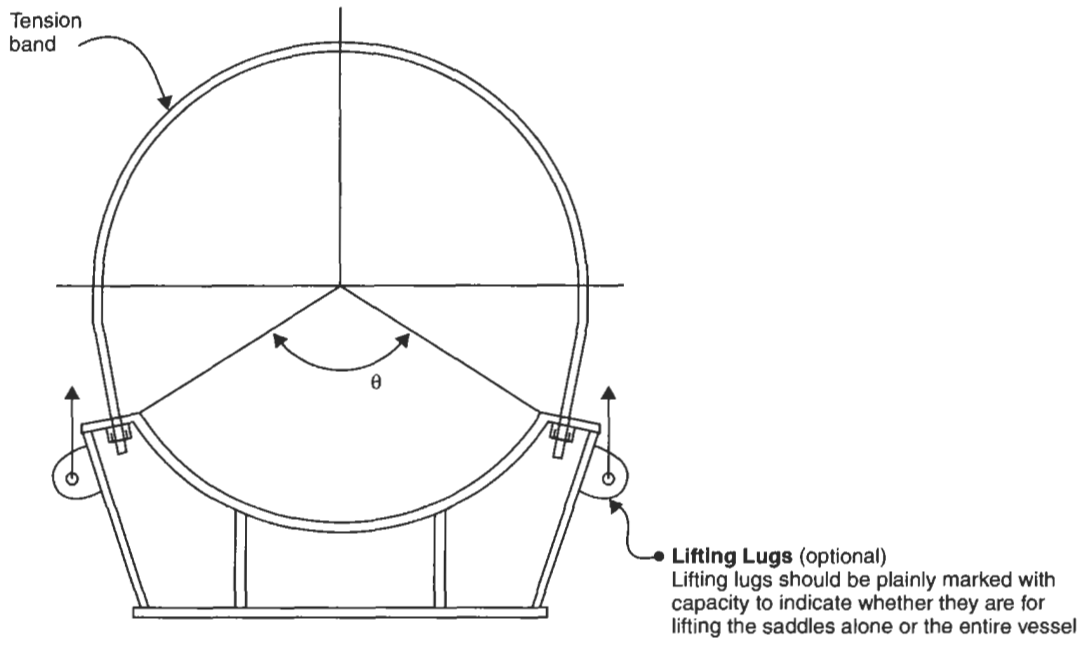

Alternate Construction

Lashing

Reference

- 1-in. wire rope
  Allowable load = 14 kips
- 1¼-in. turnbuckle
  Allowable load = 15 kips
- 1¾-in. turnbuckle
  Allowable load = 28 kips
- 1-in. Shackle
  SWL = 17 kips
- 1½-in. Shackle
  SWL = 34 kips

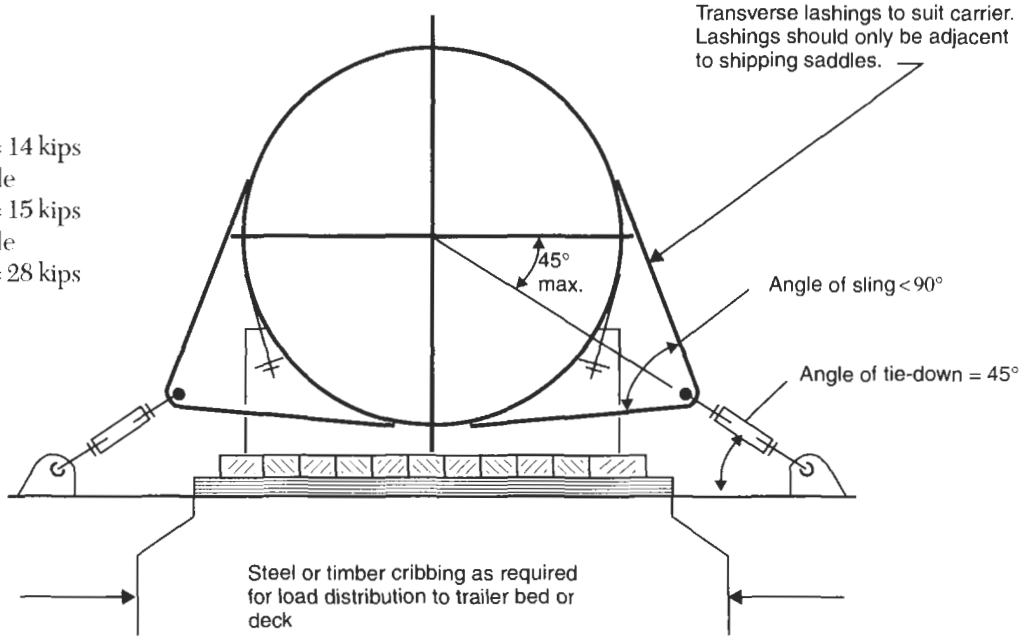

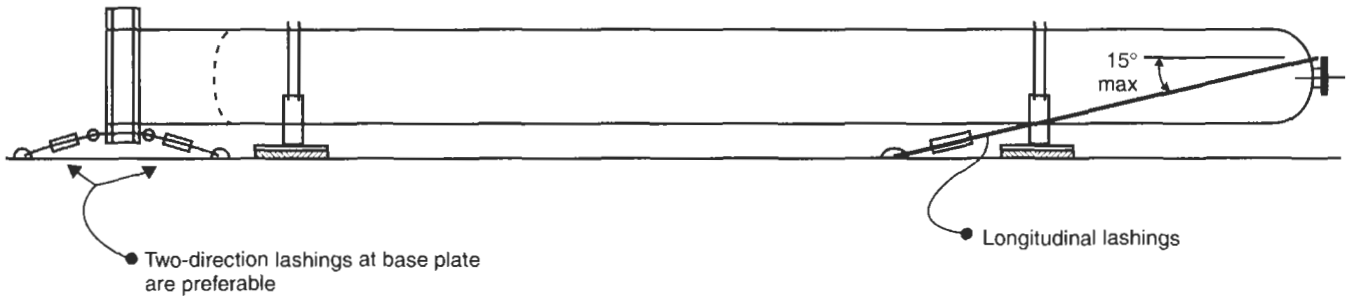

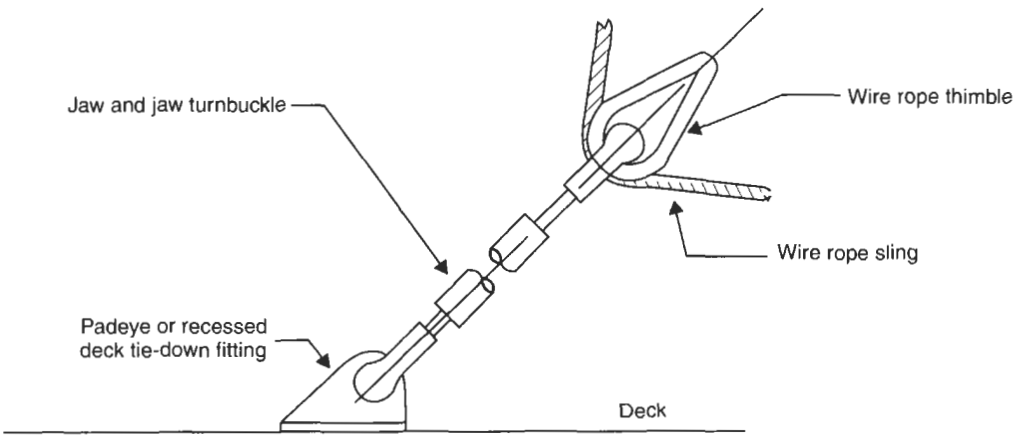

Detail of Lashing to Deck

Tension Bands on Saddles

Notation

A_r = area required, in.^{2}

A_s = area of bolt, in.^{2}

A_b = area of band required, in.^{2}

A_w = allowable load on weld, lb/in.

B = saddle height, in.

d = bolt diameter, in.

f = load on weld, K/in.

F_t = allowable stress, tension, psi

F_x, F_y, F_z = shipping, external forces, lb

N = number of bands on one saddle

P_e = equivalent external pressure, psi

R = outside vessel radius, in.

T = tension load in band, lb

$T_{1,2,3}$ = load cases in bolt and band, lb

T_b = tension load in bolt, lb

W = weight of one saddle, lb

β = angle of tension bands, degrees

σ_a = stress in bolt, psi

σ_b = stress in band, psi

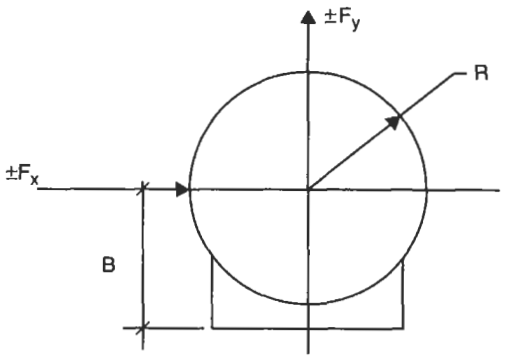

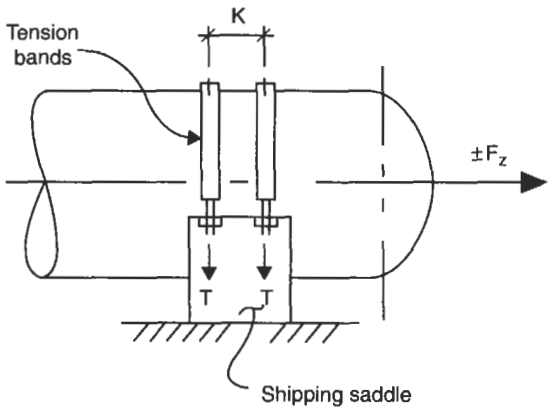

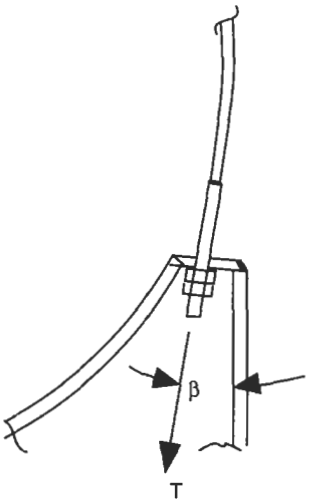

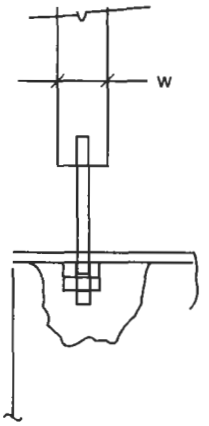

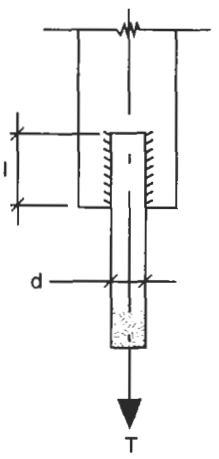

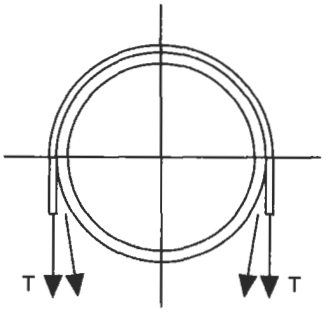

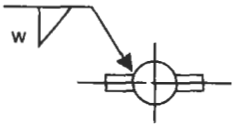

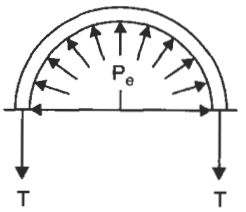

- *Find tension in band, T_1, due to shipping forces on saddle, F_x and F_y.*

$$T_1 = \cos\ \beta\left(\frac{F_x B}{4RN} + \frac{F_y - W_s}{4N}\right)$$

- *Area required for bolt.*

$$A_r = \frac{T_1}{F_t}$$

- *Find bolt diameter, d.*

$$d = \sqrt{\frac{4A_r}{\pi}}$$

Select nominal bolt diameter:

$A_s =$

- *Find maximum stress in bolt due to manual wrenching, σ_a.*

$$\sigma_a = \frac{45{,}000}{\sqrt{d}}$$

Table 7-4
Allowable Load, Weld

Weld Size, w	E60XX*	E70XX*
3/16 in.	2.39	2.78
1/4 in.	3.18	3.71
5/16 in.	3.98	4.64
3/8 in.	4.77	5.57
7/16 in.	5.56	6.50

*Kips/in. of weld.

- *Maximum tension load in bolts, T_2.*

$$T_2 = \sigma_a A_s$$

- *Load due to saddle weight, T_3.*

$$T_3 = \frac{W}{2N}$$

Note: Include impact factor in weight of saddle.

- *Find maximum load, T.*

T = greater of T_1, T_2, or T_3.

- *Load on weld, f.*

$$f = \frac{T}{4l}$$

- Determine size of weld from table based on load, f.

Use w =

- *Maximum band spacing, K.*

$$K = \frac{4\sqrt{Rt}}{1.285}$$

- *Find area required for tension band, A_r.*

$$A_r = \frac{T}{F_t}$$

Use:

- *Check shell stresses due to force T, P_e.*

$$P_e = \frac{4T}{\pi RK} \qquad < \text{ASME factor "B"}$$

Load Diagrams for Moments and Forces

Case 1

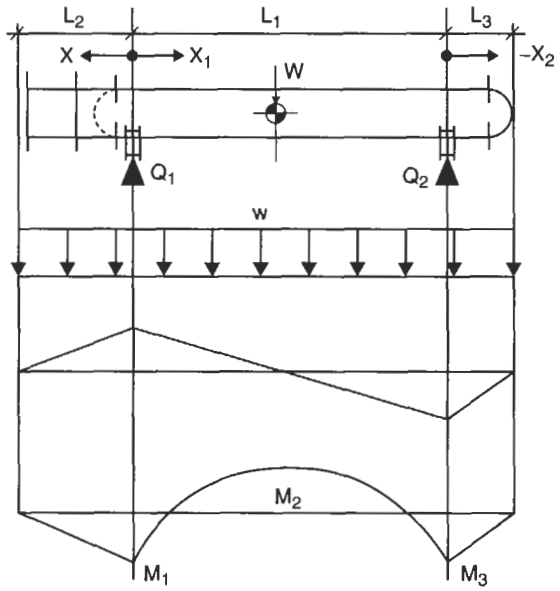

Note: W = weight of vessel plus any impact factors.

$$OAL = L_1 + L_2 + L_3 \qquad w = \frac{W}{OAL}$$

$$Q_1 = \frac{w(L_1 + L_2)^2 - L_3^2}{2L_1}$$

$$Q_2 = W - Q_1$$

$$M_1 = \frac{wL_2^2}{2}$$

$$M_2 = Q_1\left(\frac{Q_1}{2w} - L_2\right)$$

$$M_3 = \frac{wL_3^2}{2}$$

$$M_x = \frac{w(L_2 - X)^2}{2}$$

$$M_{x1} = \frac{w(L_2 + X_1)^2}{2} - Q_1X_1$$

$$M_{x2} = \frac{w(L_3 - X_2)^2}{2}$$

Case 2

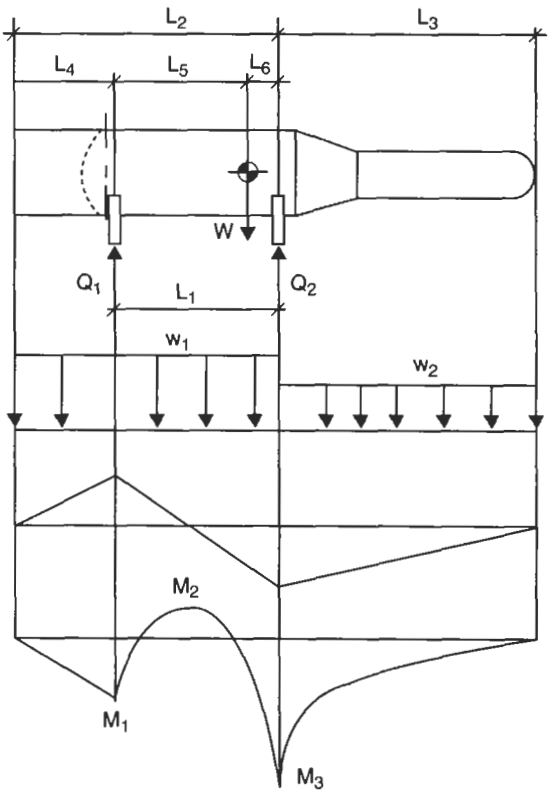

$$w_1 = \frac{W_1}{L_2}$$

$$w_2 = \frac{W_2}{L_3}$$

$$Q_1 = \frac{WL_6}{L_1}$$

$$Q_2 = W - Q_1$$

$$M_1 = \frac{w_1L_4^2}{2}$$

$$M_2 = \frac{M_1 + M_3}{2} - \frac{w_1L_1^2}{8}$$

$$M_3 = \frac{w_2L_3^2}{2}$$

Case 3

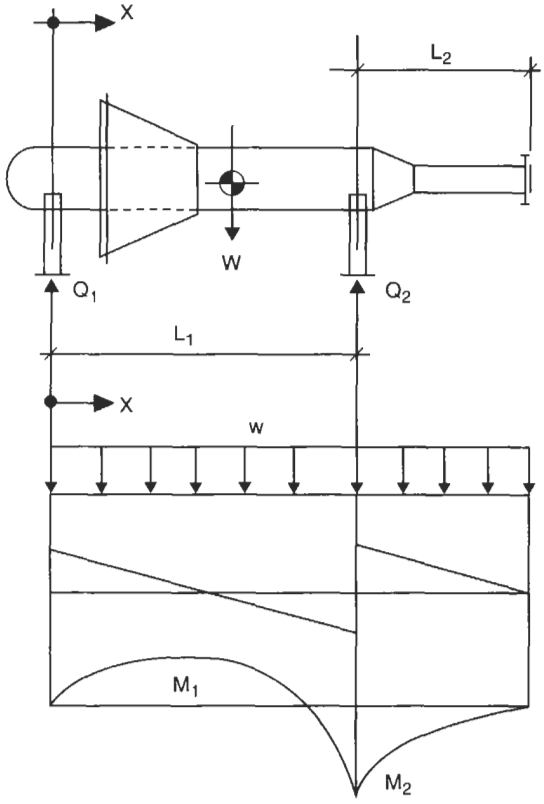

$$Q_1 = \frac{WL_1}{2(L_1 + L_2)} - \frac{WL_2^2}{2L_1(L_1 + L_2)}$$

$$Q_2 = \frac{WL_1}{2(L_1 + L_2)} + \frac{WL_2}{L_1 + L_2} - \frac{WL_2^2}{2L_1(L_1 + L_2)}$$

$$M_1 = \frac{Q_1^2(L_1 + L_2)}{2W}$$

$$M_2 = Q_1 - \frac{WX^2}{2(L_1 + L_2)}$$

$$M_x = Q_1 - \frac{(WX^2)}{2(L_1 + L_2)}$$

Case 4

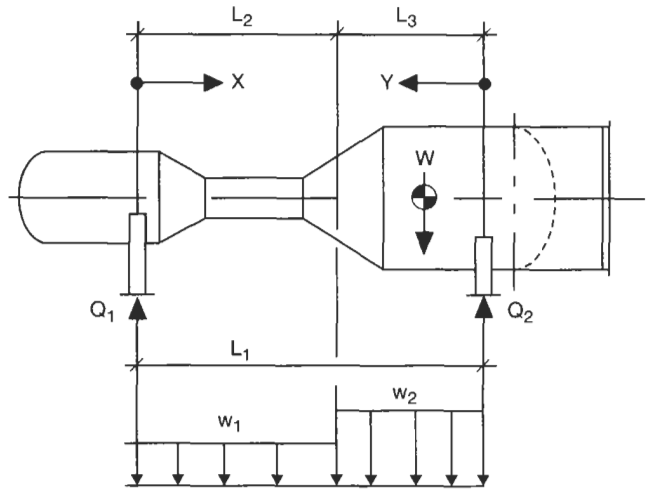

$$w_1 = \frac{W_1}{L_2}$$

$$w_2 = \frac{W_2}{L_3}$$

$$Q_1 = \frac{w_1L_2(2L_1 - L_2) + w_2L_3^2}{2L_1}$$

$$Q_2 = \frac{w_2L_3(2L_1 - L_3) + w_1L_2^2}{2L_1}$$

Moment at any point X from Q_1:

$$M_x = Q_1X - \frac{w_1X^2}{2}$$

Moment at any point Y from Q_2:

$$M_y = Q_2(L_1 - Y) - \frac{w_2(L_1 - Y)^2}{2}$$

Check Vessel Shell Stresses

Notation

$Z = \pi R^2 t$
r = radius of vessel, in.
R = radius of vessel, ft.
b = width of saddle, in.
$d = b + 1.56\sqrt{rt}$

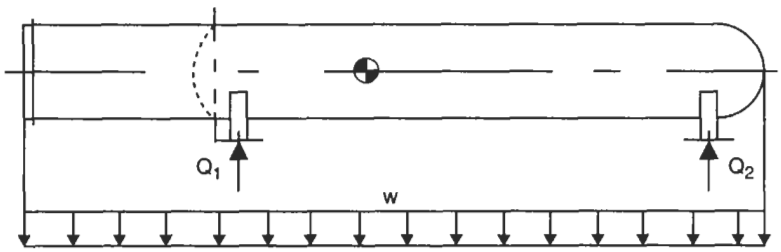

LOAD DIAGRAM

Stress Type	General	At Saddle 1	At Saddle 2
Longitudinal bending at saddles	—	$S_1 = \frac{M}{K_1 r^2 t}$	$S_1 = \frac{M}{K_1 r^2 t}$
	—	$S_2 = -\left(\frac{M}{K_7 r^2 t}\right)$	$S_2 = -\left(\frac{M}{K_7 r^2 t}\right)$
Longitudinal bending at midspan	$S_3 = \frac{M}{Z}$		
Tangential shear	—	$S_7 = \frac{K_3 Q_1}{rt}$	$S_7 = \frac{K_3 Q_2}{rt}$
Circumferential stress at horn of saddle $L_1 > 8R$	—	$S_9 = -\left(\frac{Q_1}{4td}\right) - \frac{3K_6 Q_1}{2t^2}$	$S_9 = -\left(\frac{Q_2}{4td}\right) - \frac{3K_6 Q_2}{2t^2}$
$L_1 < 8R$	—	$S_{10} = -\left(\frac{Q_1}{4td}\right) - \frac{12K_6 Q_1 R}{L_1 t^2}$	$S_{10} = -\left(\frac{Q_2}{4td}\right) - \frac{3K_6 Q_2 R}{L_1 t^2}$
Circumferential compression	—	$S_{12} = -\left(\frac{K_5 Q_1}{td}\right)$	$S_{12} = -\left(\frac{K_5 Q_2}{td}\right)$

Notes:
1. Also check shell stresses at each change of thickness and diameter.
2. See Procedure 3-10 for a detailed description of shell stresses and for values of coefficients K_1 through K_7.
3. Values of M and Q should be determined from the previous pages at the applicable location.
4. Allowable stresses:

Tension: $0.9F_y$
Compression: Factor "B" from ASME Code

PROCEDURE 7-2

ERECTION OF PRESSURE VESSELS

The designer of pressure vessels and similar equipment will ultimately become involved in the movement, transportation, and erection of that equipment. The degree of that involvement will vary due to the separation of duties and responsibilities of the parties concerned. It is prudent, however, for the designer to plan for the eventuality of these events and to integrate these activities into the original design. If this planning is done properly, there is seldom a problem when the equipment gets to its final destination. Conversely there have been numerous problems encountered when proper planning has not been done.

There is also an economic benefit in including the lifting attachments in the base vessel bid and design. These lifting attachments are relatively inexpensive in comparison to the overall cost of the vessel and minuscule compared to the cost of the erection of the equipment. The erection alone for a major vessel can run into millions of dollars. If these attachments are added after PO award, they can become expensive extras.

There are also the consequences to life, property, and schedules if this activity is not carried out to a successful conclusion. Compared to the fabricated cost of the lifting attachments, the consequences to life, property, and schedule are too important to leave the design of these components and their effect on the vessel to those not fully versed in the design and analysis of pressure vessels.

In addition, it is important that the designer of the lifting attachments be in contact with the construction organization that will be executing the lift. This ensures that all lifting attachments meet the requirements imposed by the lifting equipment. There are so many different methods and techniques for the erection of vessels and the related costs of each that a coordinated effort between the designer and erector is mandatory. To avoid surprises, neither the designer nor the erector can afford to work in a vacuum. To this end, it is not advisable for the vessel fabricator to be responsible for the design if the fabricator is not the chief coordinator of the transport and erection of the vessel.

Vessels and related equipment can be erected in a variety of ways. Vessels are erected by means of single cranes, multiple cranes, gin poles, jacking towers, and other means. The designer of the lifting attachments should not attempt to dictate the erection method by the types of attachments that are designed for the vessel. The selection of one type of attachments versus another could very well do just that.

Not every vessel needs to be designed for erection or have lifting attachments. Obviously the larger the vessel, the more complex the vessel, the more expensive the vessel, the more care and concern that should be taken into account when designing the attachments and coordinating the lift. The following listing will provide some guidelines for the provision of special lifting attachments and a lifting analysis to be done. In general, provide lifting attachments for the following cases:

- Vessels over 50,000 lb (25 tons).
- Vessels with L/D ratios greater than 5.
- Vertical vessels greater than 8 ft in diameter or 50 ft in length.
- Vessels located in a structure or supported by a structure.
- High-alloy or heat-treated vessels (since it would not be advisable for the field to be doing welding on these vessels after they arrive on site, and wire rope slings could contaminate the vessel material)
- Flare stacks.
- Vessels with special transportation requirements.

At the initial pick point, when the vessel is still horizontal, the load is shared between the lifting lugs and the tail beam or lug, based on their respective distances to the vessel center of gravity. As the lift proceeds, a greater percentage of the load is shifted to the top lugs or trunnions until the vessel is vertical and all of the load is then on the top lugs. At this point the tail beam or shackle can be removed.

During each degree of rotation, the load on the lugs, trunnions, tailing device, base ring, and vessel shell are continually varying. The loads on the welds attaching these devices will also change. The designer should evaluate these loadings at the various lift angles to determine the worst coincident case.

The worst case is dependent on the type of vessel and the type of attachments. For example, there are three types of trunnions described in this procedure. There is the bare trunnion (Type 3), where the wire rope slides around the trunnion itself. While the vessel is in the horizontal position (initial pick point), the load produces a circumferential moment on the shell. Once the vessel is in the upright position, the same load produces a longitudinal moment in the shell. At all the intermediate angles of lift there is a combination of circumferential and longitudinal moments. The designer should check the two worst cases at 0° and 90° and several combinations in between.

The same trunnion could have a lifting lug welded to the end of the trunnion (Type 1). This lug also produces circumferential and longitudinal moments in the shell. However, in addition this type of lug will produce a torsional moment on the shell that is maximum of 0° and zero at 90° of angular rotation. The rotating lug (Type 2) eliminates any torsional moment.

There is one single lift angle that will produce the maximum stress in the vessel shell but no lift angle that is the worst for all vessels. The worst case is dependent on the type of lift attachments, distances, weights, and position relative to the center of gravity.

The minimum lift location is the lowest pick point that does not overstress the overhanging portion of the vessel. The maximum lift location is the highest pick point that does not overstress the vessel between the tail and pick points. These points become significant when locating the lift points to balance the stress at the top lug, the overhang, and the midspan stress.

The use of side lugs can sometimes provide an advantage by reducing the buckling stress at midspan and the required lift height. Side lugs allow for shorter boom lengths on a two-crane lift or gin poles. A shorter boom length, in turn, allows a higher lift capacity for the cranes. The lower the lug location on the shell, the shorter the lift and the higher the allowable crane capacity. This can translate into dollars as crane capacity is affected. The challenge from the vessel side is the longitudinal bending due to the overhang and increased local shell stresses. All of these factors must be balanced to determine the lowest overall cost of an erected vessel.

Steps in Design

Given the overall weight and geometry of the vessel and the location of the center of gravity based on the erected weight, apply the following steps to either complete the design or analyze the design.

Step 1: Select the type of lifting attachments as an initial starting point:

Lift end (also referred to as the "pick end"):

a. *Head lug:* Usually the simplest and most economical, and produces the least stress.
b. *Cone lug:* Similar to a head lug but located at a conical transition section of the vessel.
c. *Side lug:* Complex and expensive.
d. *Top flange lug:* The choice for high-pressure vessels where the top center flange and head are very rigid. This method is uneconomical for average applications.
e. *Side flange lug:* Rarely used because it requires a very heavy nozzle and shell reinforcement.
f. *Trunnions:* Simple and economical. Used on a wide variety of vessels.
g. Other.

Tail end:

a. Tail beam.
b. Tail lug.
c. Choker (cinch); see later commentary.

Tailing a column during erection with a wire rope choker on the skirt above the base ring is a fairly common procedure. Most experienced erectors are qualified to perform this procedure safely. There are several advantages to using a tailing choker:

- Saves material, design, detailing, and fabrication.
- Simplifies concerns with lug and shipping orientations.
- May reduce overall height during transportation.

There are situations and conditions that could make the use of a tailing choker impractical, costly, and possibly unsafe. Provide tailing lugs or a tailing beam if:

- The column is more than about 10 ft in diameter. The larger the diameter, the more difficult it is for the wire rope to cinch down and form a good choke on the column.
- The tail load is so great that it requires the use of slings greater than about 1½ in. in diameter. The larger the diameter of the rope, the less flexible it is and the more likely that it could slip up unexpectedly during erection.

Step 2: Determine the forces T and P for all angles of erection.
Step 3: Design/check the lifting attachments for the tailing force, T, and pick force, P.
Step 4: Design/check the base ring assembly for stresses due to tailing force, T.
Step 5: Determine the base ring stiffening configuration, if required, and design struts.
Step 6: Check shell stresses due to bending during lift. This would include midspan as well as any overhang.
Step 7: Analyze local loads in vessel shell and skirt due to loads from attachments.

Allowable Stresses

Per AISC:

Tension

$$F_t = 0.6F_y \text{ on gross area}$$
$$= 0.5F_y \text{ on effective net area}$$
$$= 0.45F_y \text{ for pin-connected members}$$

Compression

(for short members only)

F_c = for structural attachments: $0.6F_y$

= for vessel shell: 1.33 × ASME Factor "B"

Shear

F_s = Net area of pin hole: $0.45F_y$

= other than pin-connected members: $0.4F_y$

= fillet welds in shear:

E60XX: 9600 lb/in. or 13,600 psi

E70XX: 11,200 lb/in. or 15,800 psi

Bending

$F_b = 0.66F_y$ to $0.75F_y$, depending on the shape of the member

Bearing

$F_p = 0.9F_y$

Combined

Shear and tension:

$$\frac{\sigma_a}{F_a} + \frac{\tau}{F_s} < 1$$

Tension and bending:

$$\frac{\sigma_a}{F_a} + \frac{\sigma_b}{F_b} < 1$$

Note: Custom-designed lifting devices that support lifted loads are generally governed by ASME B30.20 "Below the hook lifting devices." Under this specification, design stresses are limited to $F_y/3$. The use of AISC allowables with a load factor of 1.8 or greater will generally meet this requirement.

Notation

A = area, in.^{2}
A_a = area, available, in.^{2}
A_b = area, bolt, in.^{2}
A_n = net cross-sectional area of lug, in.^{2}
A_p = area, pin hole, in.^{2}
A_r = area, required, in.^{2}
A_s = area, strut, in.^{2} or shear area of bolts
C = lug dimension, see sketch
D_o = diameter, vessel OD, in.
D_1 = diameter, lift hole, in.
D_2 = diameter, pin, in.
D_3 = diameter, pad eye, in.
D_{sk} = diameter, skirt, in.
D_m = mean vessel diameter, in.
E = modulus of elasticity, psi
f_r = tail end radial force, lb
f_L = tail end longitudinal force, lb
f_s = shear load, lb or lb/in.
F_a = allowable stress, combined loading, psi
F_b = allowable stress, bending, psi
F_c = allowable stress, compression, psi
F_p = allowable stress, bearing pressure, psi
F_s = allowable stress, shear, psi
F_t = allowable stress, tension, psi
F_y = minimum specified yield stress, psi
I = moment of inertia, in.^{4}
J_w = polar moment of inertia of weld, in.^{4}
K = end connection coefficient
K_L = overall load factor combining impact and safety factors, 1.5–2.0
K_i = impact factor, 0.25–0.5
K_r = internal moment coefficient in circular ring due to radial load, in.-lb
K_s = safety factor
K_T = internal moment coefficient in circular ring due to tangential load, in.-lb
L_s = length of skirt/base stiffener/strut, in.
M = moment, in.-lb
M_b = bending moment, in.-lb
M_C = circumferential moment, in.-lb
M_L = longitudinal moment, in.-lb
M_T = torsional moment, in.-lb
N_b = number of bolts used in tail beam or flange lug
N = width of flange of tail beam with a web stiffener ($N = 1.0$ without web stiffener)
n_L = number of head or side lugs
P = pick end load, lb
P_e = equivalent load, lb
P_L = longitudinal load per lug, lb
P_r = radial load, lb
P_T = transverse load per lug, lb
R_b = radius of base ring to neutral axis, in.
r = radius of gyration of strut, in.
R_c = radius of bolt circle of flange, in.
S_u = minimum specified tensile stress of bolts, psi
t_b = thickness of base plate, in.
t_g = thickness of gusset, in.
t_L = thickness of lug, in.
t_P = thickness of pad eye, in.
t_s = thickness of shell, in.
T = tail end load, lb
T_b = bolt pretension load, lbs
T_t = tangential force, lb
w_1 = fillet weld size, shell to re-pad
w_2 = fillet weld size, re-pad to shell
w_3 = fillet weld size, pad eye to lug
w_4 = fillet weld size, base plate to skirt
w_5 = uniform load on vessel, lb/in.
W_E = design erection weight, lb
W_L = erection weight, lb
Z = section modulus, in.^{3}
α = angular position for moment coefficients in base ring, clockwise from 0°
β = angle between parallel beams, degrees
σ = stress, combined, psi
σ_b = stress, bending, psi
σ_p = stress, bearing, psi
σ_c = stress, compression, psi
σ_{cr} = critical buckling stress, psi
σ_T = stress, tension, psi
τ = shear stress, psi
τ_T = torsional shear stress, psi
θ = lift angle, degrees
θ_B = minimum bearing contact angle, degrees
θ_H = sling angle to lift line, horizontal, degrees
θ_v = sling angle to lift line, vertical, degrees

PROCEDURE 7-3

LIFTING ATTACHMENTS AND TERMINOLOGY

Types of Lifting Attachments

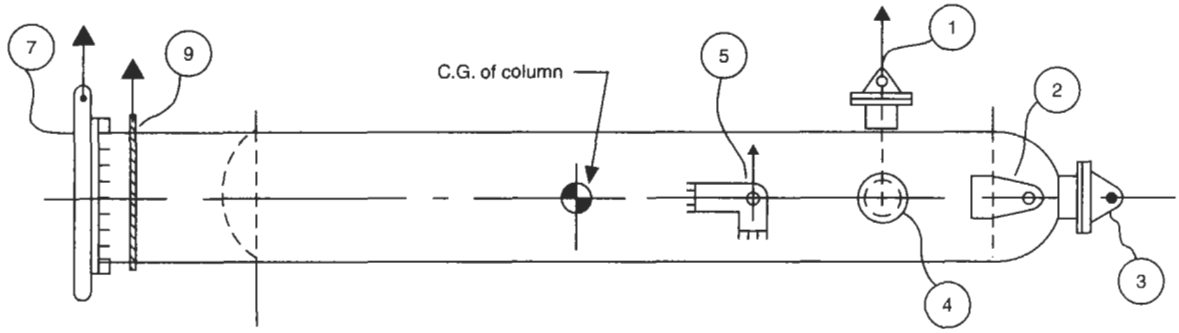

Tail Lift End

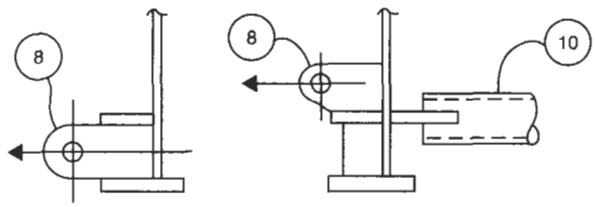

Lift or Pick End

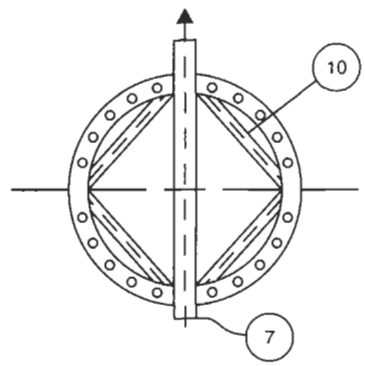

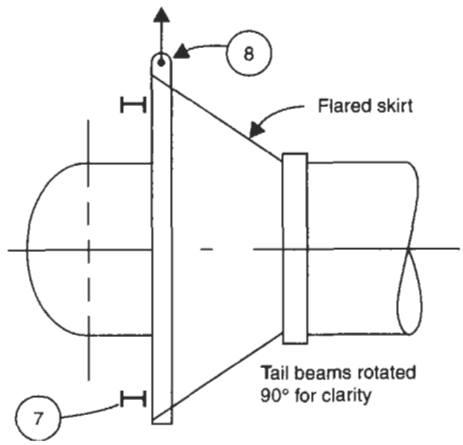

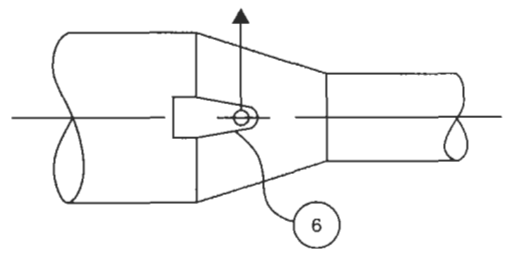

LIFT END OPTIONS

1. Shell flange lug
2. Top head lug
3. Top flange lug
4. Trunnion
5. Side lug
6. Cone lug

TAIL LIFT OPTIONS

7. Tail beam
8. Tail lug
9. Choker (sling)
10. Base ring stiffener

Miscellaneous Lifting Attachments

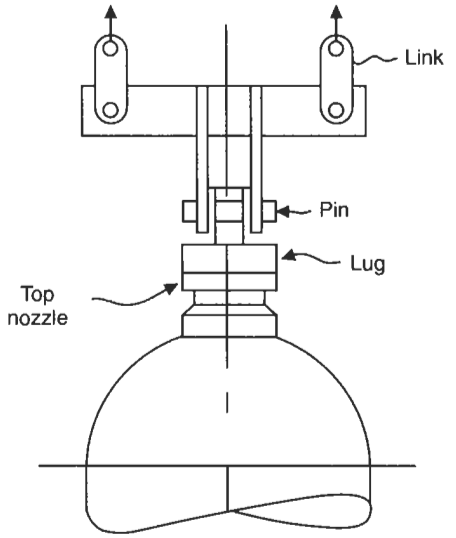

TOP FLANGE LUG WITH SPREADER

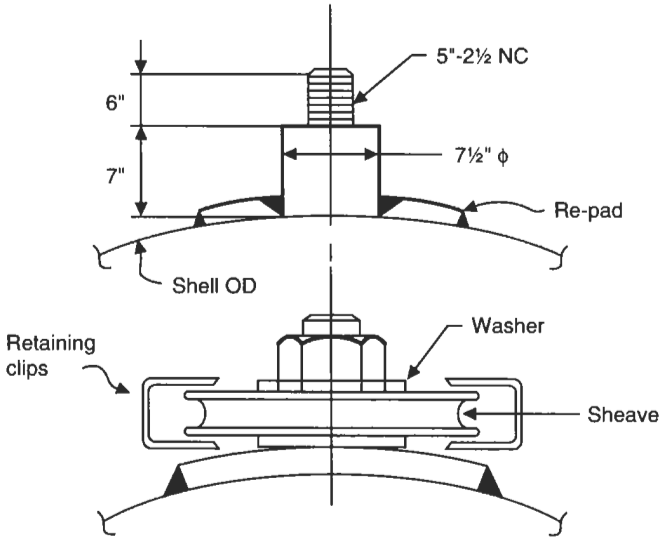

SHEAVE ASSEMBLY DIRECT MOUNT—200 TON

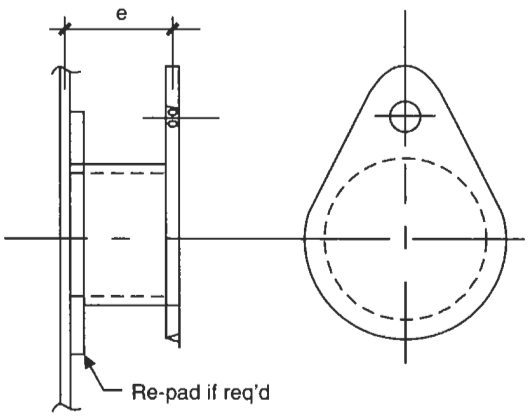

TRUNNION WITH FIXED LUG TYPE 1

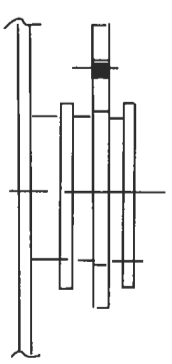

TRUNNION WITH ROTATING LUG TYPE 2

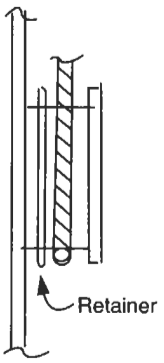

TRUNNION WITHOUT LUG TYPE 3

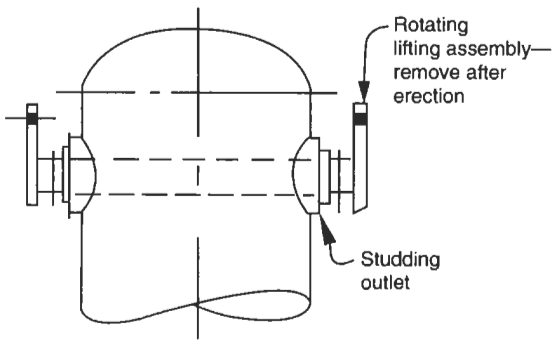

STIFFENER PIPE THROUGH STUDDING OUTLETS— BLIND AFTER ERECTION

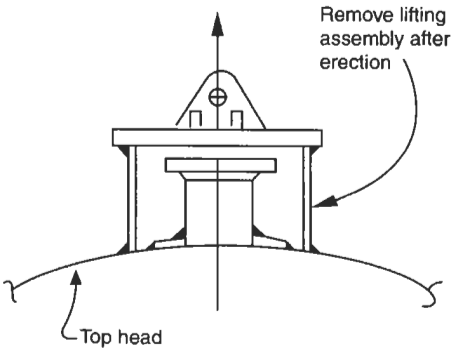

TEMPORARY TOP HEAD FLANGE LUG OVER TOP NOZZLE

Tailing Devices for Vessels with Chambers Projecting through Skirt

Utilize Projection with Base Extension

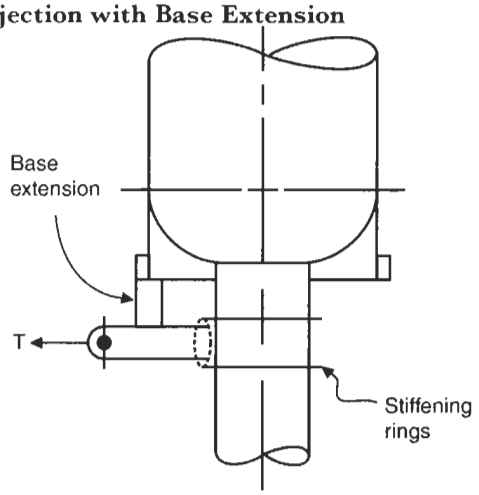

Parallel Tailing Beams Without Skirt Stiffeners

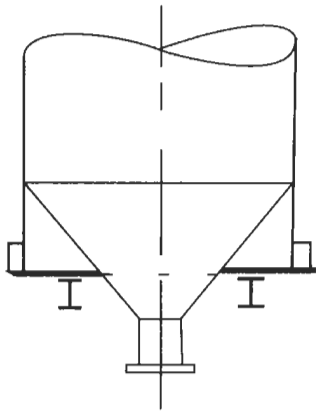

Frame-Type Tailing Device

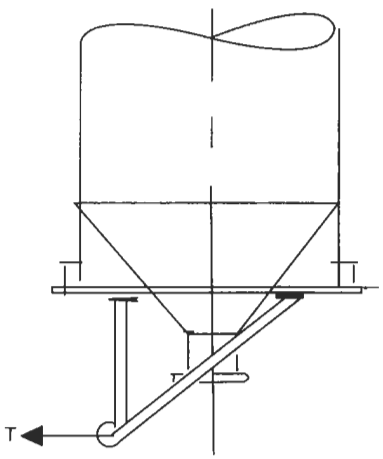

Bolted on Ring Beam Extension

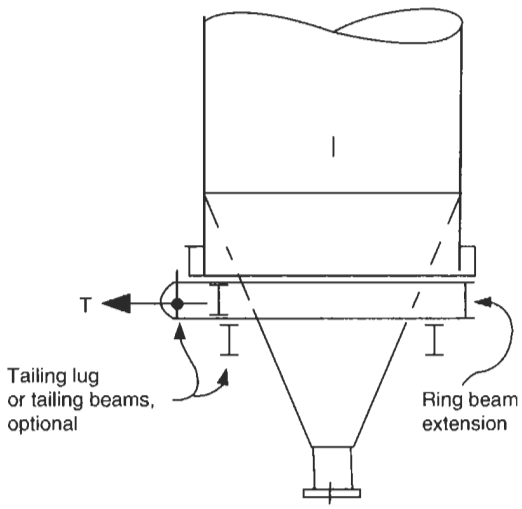

Base with Parallel Tailing Beams

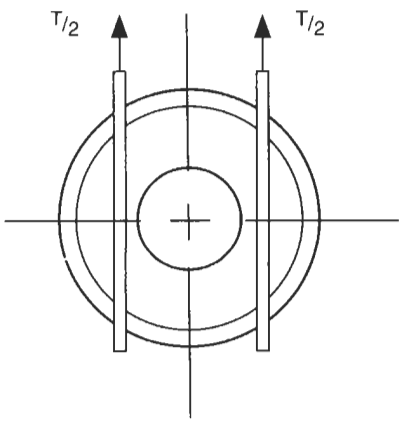

Base with Internal Base Stiffeners and Dual Tailing Lugs

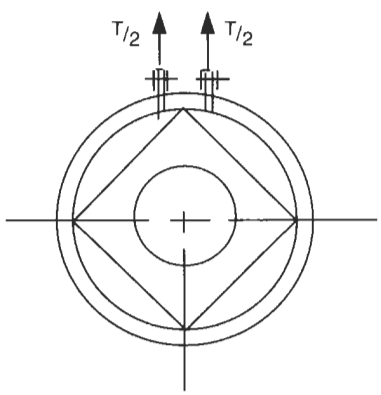

HORIZONTAL VESSELS

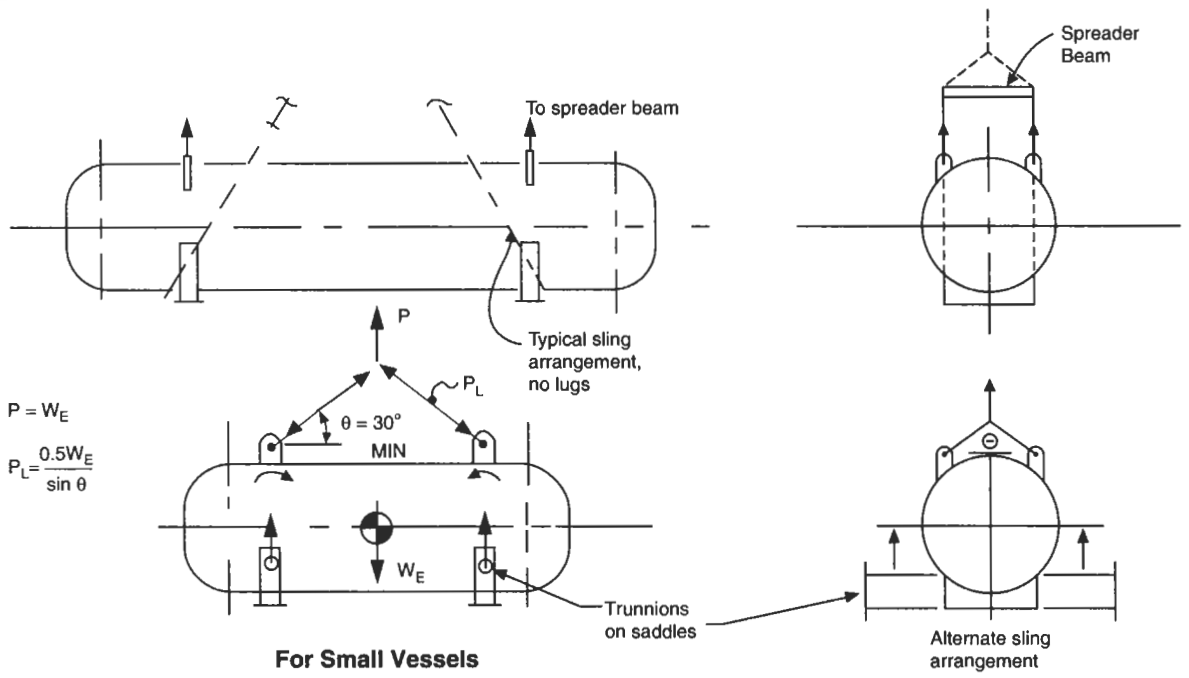

For Small Vessels

VESSELS, BINS, AND HOPPERS ON LEGS

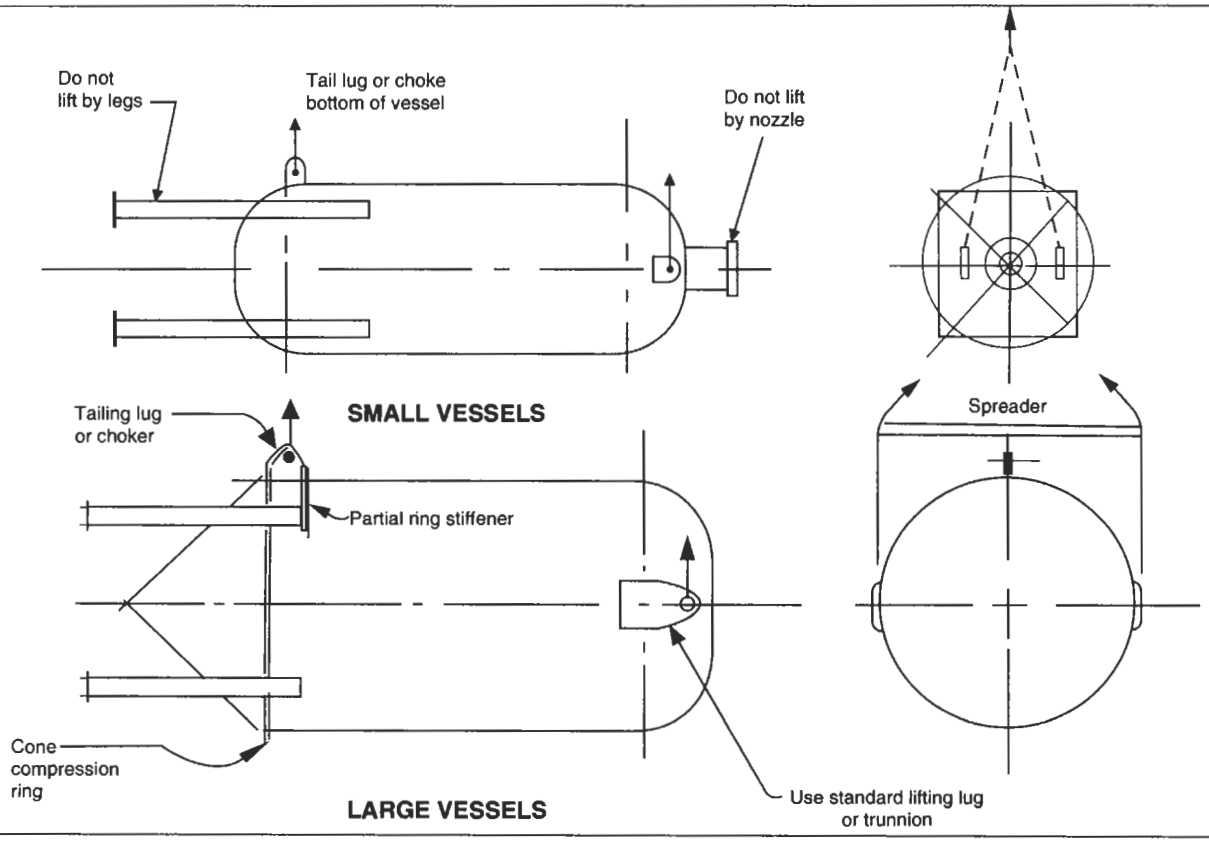

SIDE LUG WITH SWIVEL LUG

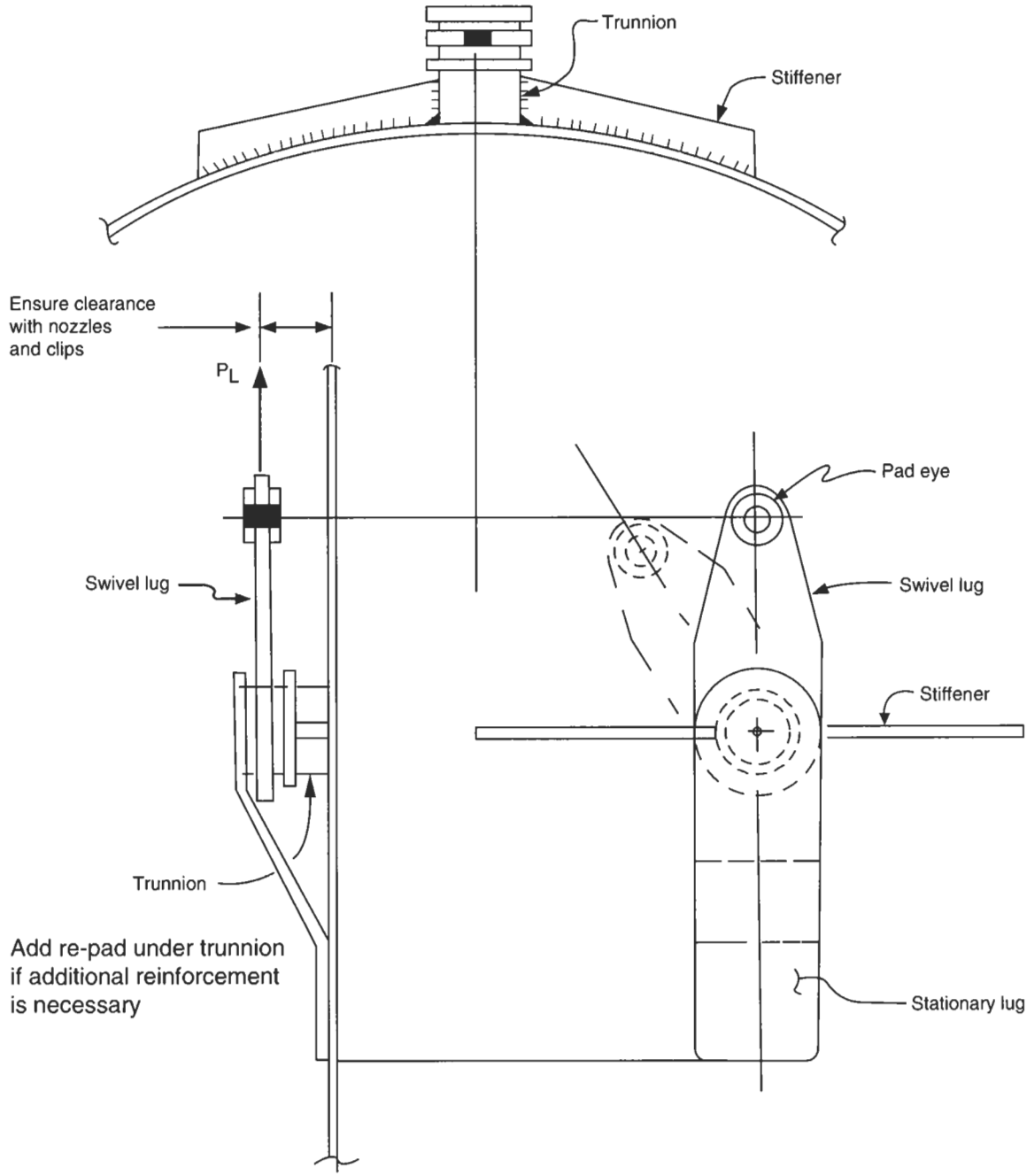

SIDE LUG COMBINATION WITH STIFFENERS

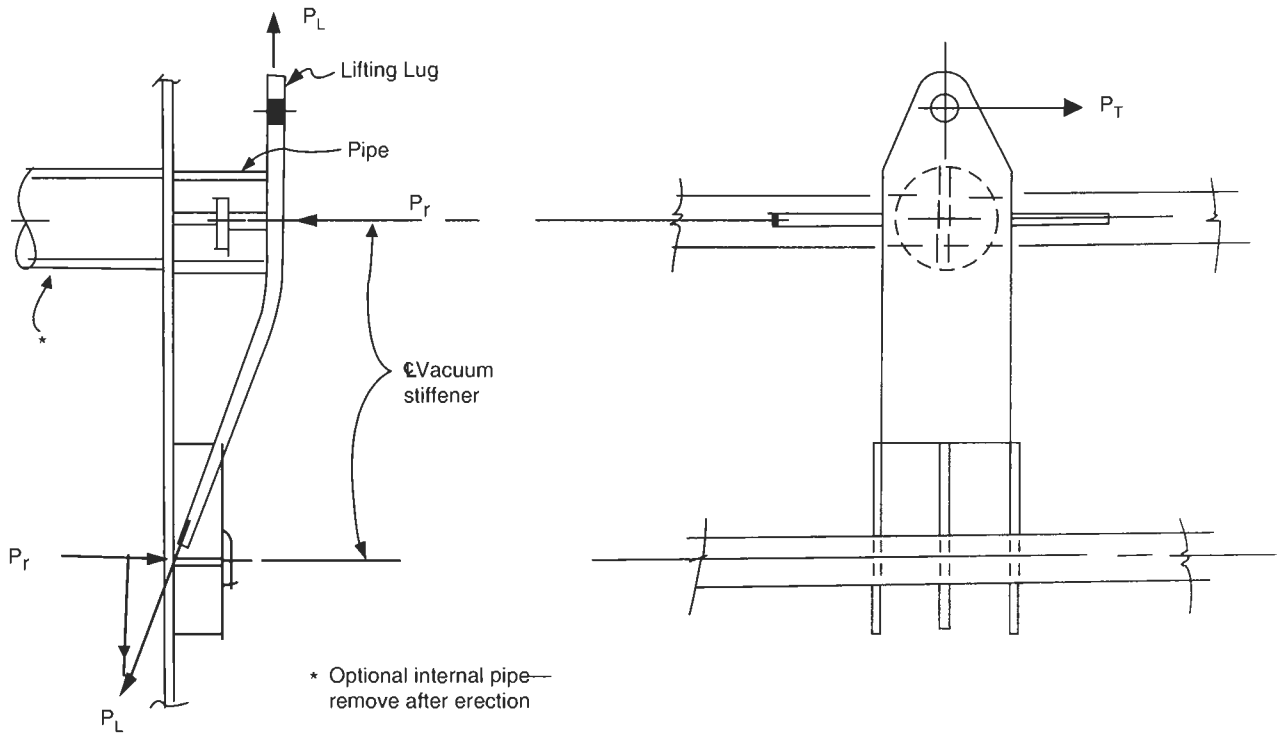

TYPICAL SIDE LUG

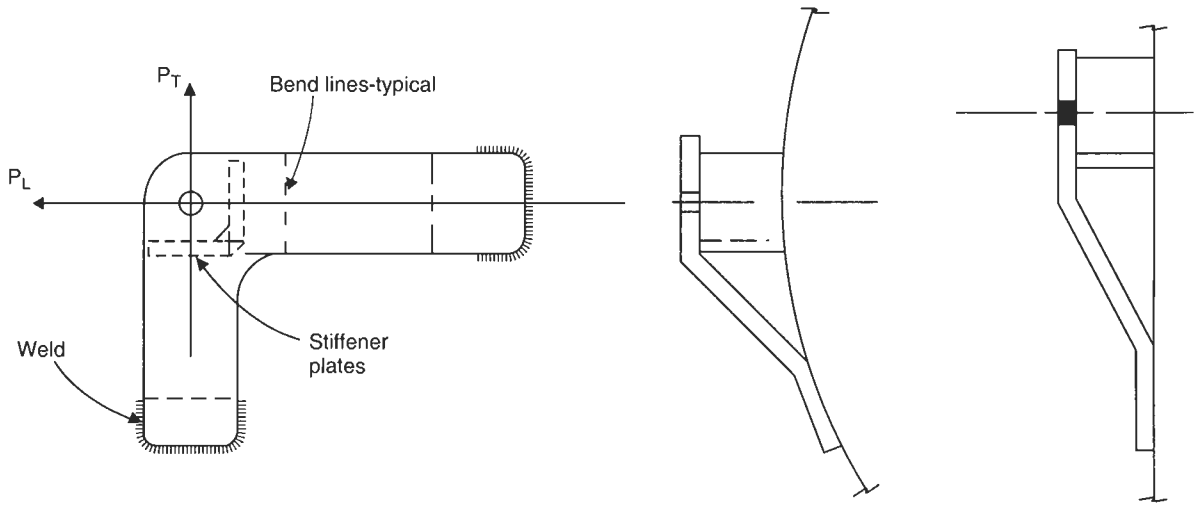

Tailing Trunnion

Utilizes reinforced openings in skirt with through pipe. Pipe is removed after erection and the openings used as skirt manways.

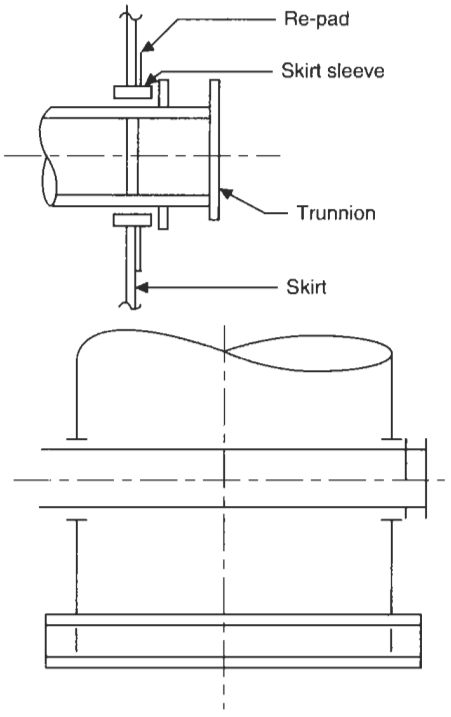

Shell Flange Lug

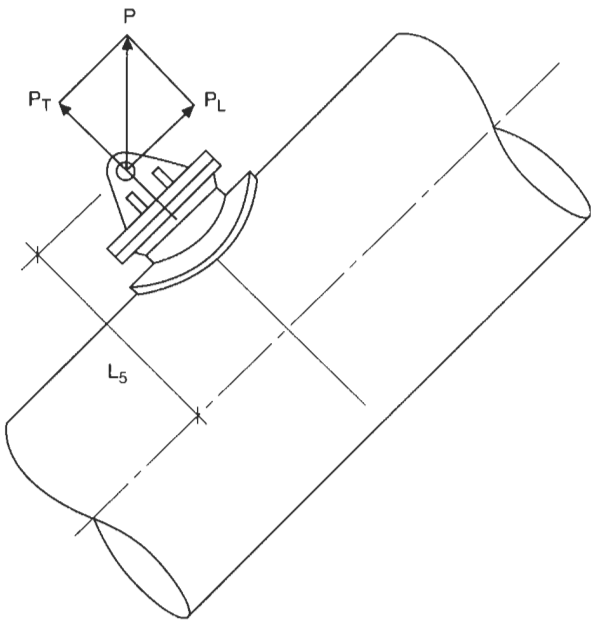

LIFTING DEVICE UTILIZING TOP BODY FLANGES

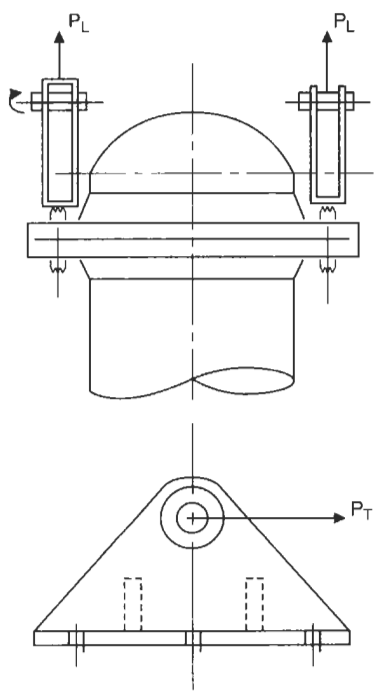

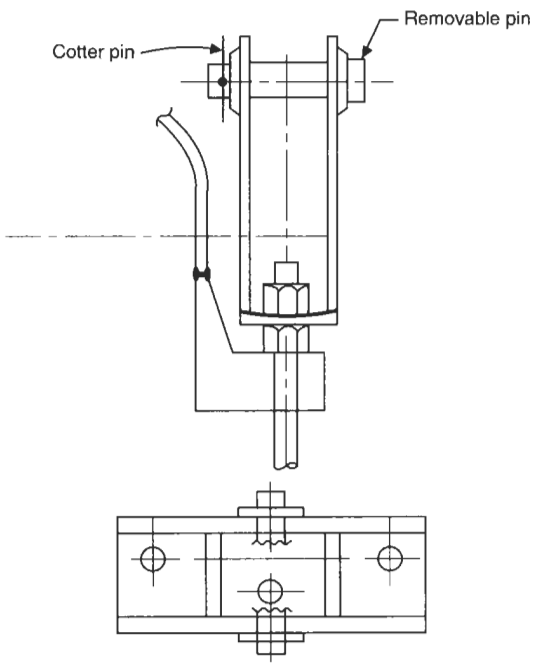

Rigging Terminology

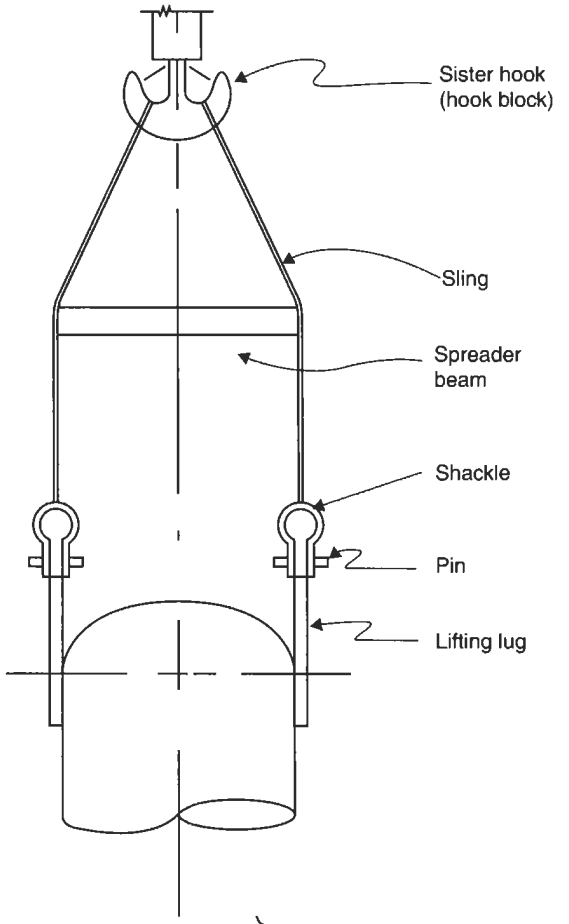

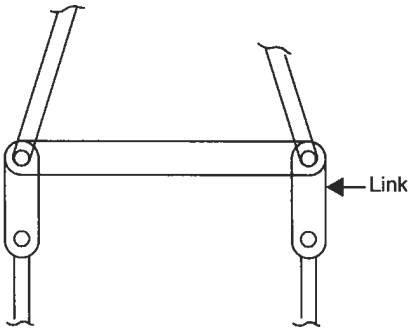

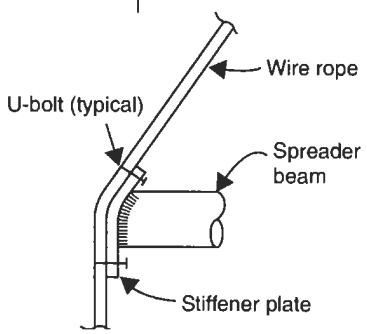

1. Boom
2. Mast
3. Gin pole
4. Crane mats
5. Dead men
6. Outriggers
7. Load block
8. Whip line
9. Cranes
10. Derricks
11. Hoist
12. Hooks
13. Jacks
14. Slings
15. Pins
16. Spreader beams
17. Equalizer beams
18. Links
19. Shackles
20. Wire rope
21. Counterweight
22. Trailing counterweight
23. Struts
24. Lashings
25. Guy streamers
26. Bail
27. Tensioning blocks
28. Hitch plate
29. Pin extractor
30. Choker
31. Tail crane
32. Tail sled

Miscellaneous Lugs, W_L < 60 kips

Table 7-5
Lug Dimensions

W_L kips	A	D_1	B	C	t_L	w_1	W_L kips	A	D_1	B	C	t_L	w_1
4	3	0.88	1.5	2	0.5	0.25	20	7	1.75	3	3	1	0.38
6	3.5	1	1.63	2	0.63	0.25	25	7	2.38	4	4	1	0.44
8	4	1.13	1.75	2	0.63	0.25	35	8	2.38	4	4	1.125	0.5
10	4.5	1.25	2	2	0.75	0.25	40	8	2.38	4	4	1.125	0.63
12	5	1.38	2.13	3	0.88	0.25	45	8	2.88	4	4	1.125	0.63
14	5.5	1.5	2.38	3	1	0.38	50	10	2.88	4	4	1.25	0.75
16	6.5	1.63	2.5	3	1	0.38	55	10	2.88	4	4	1.25	0.75
18	7	1.75	2.75	3	1	0.38	60	10	2.88	4	4	1.25	0.88

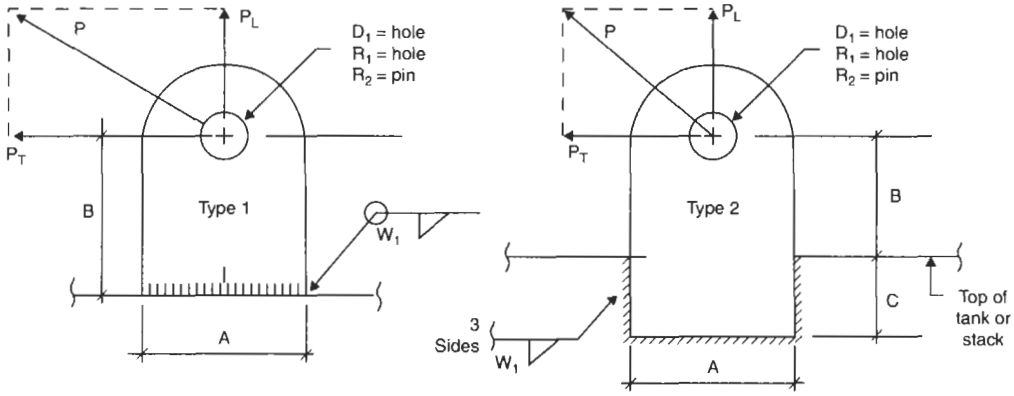

Figure 7-1. Dimensions and forces.

Calculations

Due to bending:

$$t_L = \frac{6P_T B}{A^2 F_b}$$

Due to shear:

$$t_L = \frac{P_T}{(A - D_1)F_s}$$

Due to tension:

$$t_L = \frac{P_L}{(A - D_1)F_t}$$

Notes

1. Table 7-4 is based on an allowable stress of 13.7 ksi.
2. Design each lug for a 2:1 safety factor.
3. Design each lug for a minimum 10% side force.

Hertzian Stress, Bearing

$$\sigma_p = 0.418\sqrt{\frac{\left[E\left(\frac{P}{t_L}\right)(R_1 - R_2)\right]}{R_1 R_2}} < 2F_y$$

Shear Load in Weld

Type 1: greater of following:

$$\tau_w = \frac{6P_T B}{2A^2}$$

$$\tau_w = \frac{P_L}{2A}$$

Type 2: Use design for top head lug.

PROCEDURE 7-4

LIFTING LOADS AND FORCES

Effect of Lift Line Orientation to Lug

Initial Pick Point

Multipoint Lift

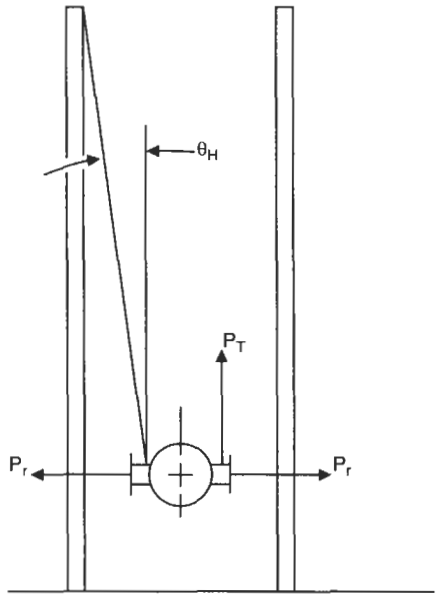

Single-Point Lift

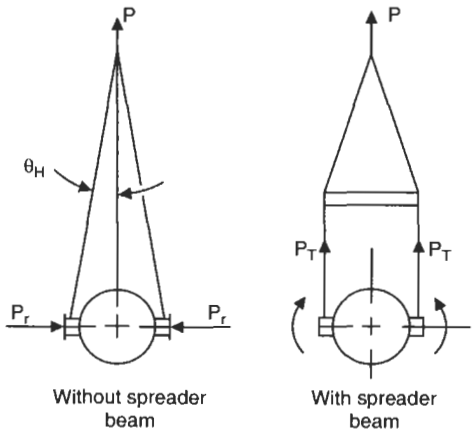

Erected Position

Multipoint Lift

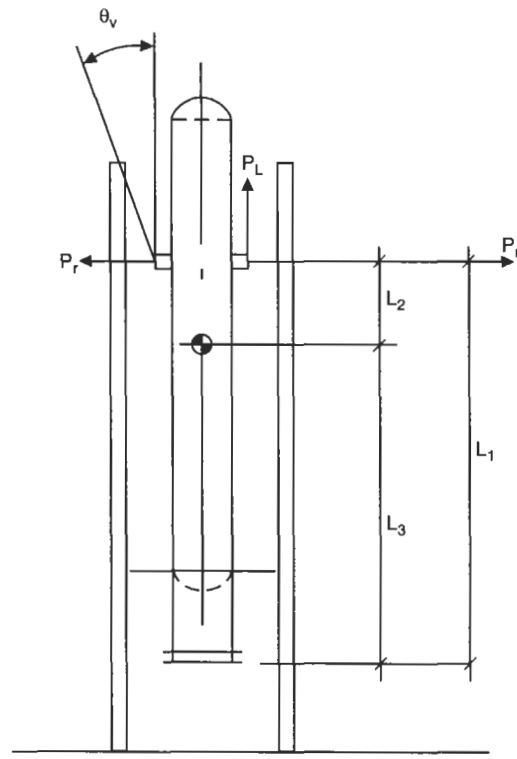

Single-Point Lift

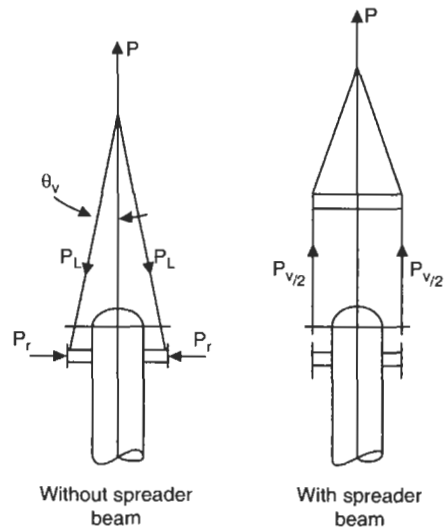

Force and Loading Diagrams

Free-Body Diagram

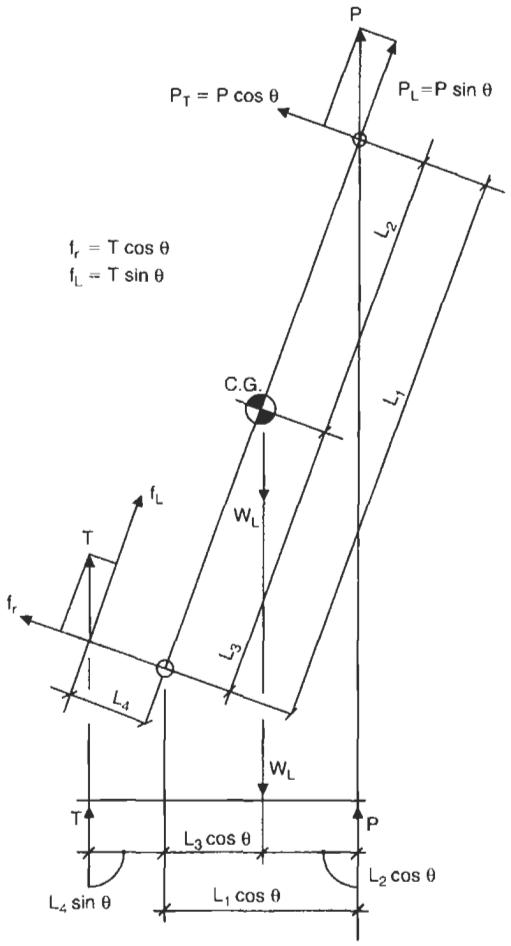

Top Head Lug

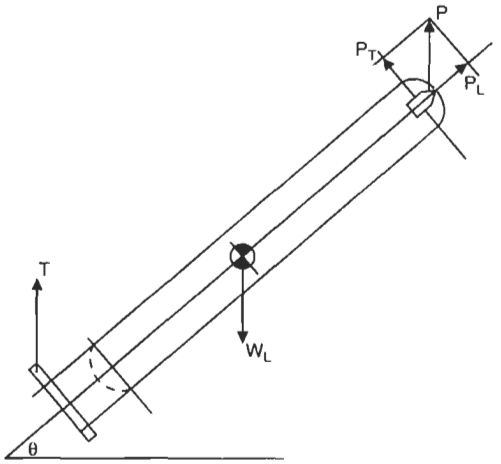

Side or Cone Lugs

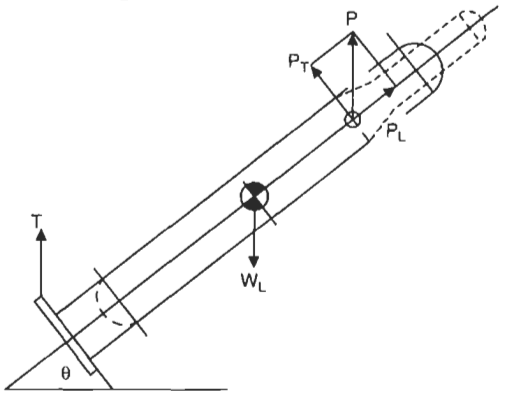

Top Flange Lug

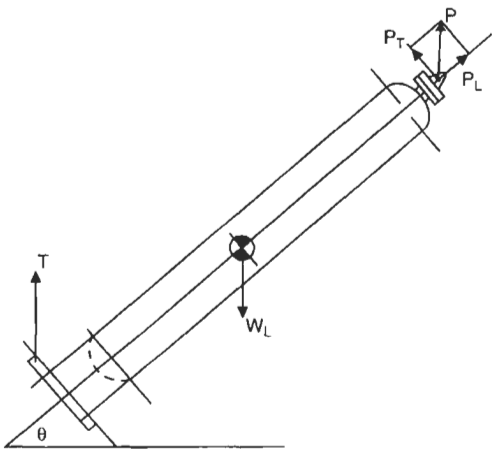

Trunnions

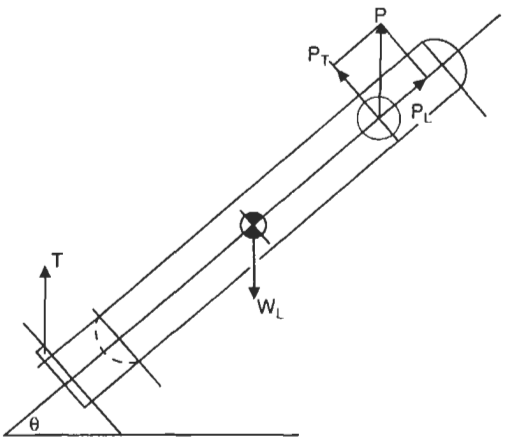

Loads

- *Overall load factor, K_L.*

$$K_L = K_i + K_s$$

- *Design lift weight, W_L.*

$$W_L = K_L W_E$$

- *Tailing load, T.*

$$T = \frac{W_L \cos\theta\, L_2}{\cos\theta\, L_1 + \sin\theta\, L_4}$$

At $\theta = 0$, initial pick point, vessel horizontal:

$$T = \frac{W_L L_2}{L_1} \quad \text{and} \quad P = \frac{W_L L_3}{L_1} \quad \text{or} \quad P = W_L - T$$

At $\theta = 90°$, vessel vertical:

$$T = 0 \quad \text{and} \quad P = W_L$$

- *Calculate the loads for various lift angles, θ.*

Loads T and P		
θ	T	P
0		
10		
20		
30		
40		
50		
60		
70		
80		
90		

Lift angles shown are suggested only to help find the worst case for loads T and P.

- *Maximum transverse load per lug, P_T.*

$$P_T = \frac{P\cos\theta}{n_L}$$

- *Maximum longitudinal load per lug, P_L.*

$$P_L = \frac{P\sin\theta}{n_L}$$

- *Radial loads in shell due to sling angles, θ_v or θ_H.*

$$P_r = P_T \tan\theta_H \qquad \text{Vessel in horizontal}$$

$$P_r = P_L \tan\theta_v \qquad \text{Vessel in vertical}$$

- *Tailing loads, f_L and f_r.*

$$f_L = T\cos\theta$$

$$f_r = T\sin\theta$$

- *Longitudinal bending stress in vessel shell, σ_b.*

$$\sigma_b = \frac{4M}{\pi D_m^2 t}$$

Maximum moment occurs at initial pick, when $\theta = 0$. See cases 1 through 4 for maximum moment, M.

Note

If the tailing point is below the C.G., as is the case when a tailing frame or sled is used, the tail support could see the entire weight of the vessel as erection approaches 90°.

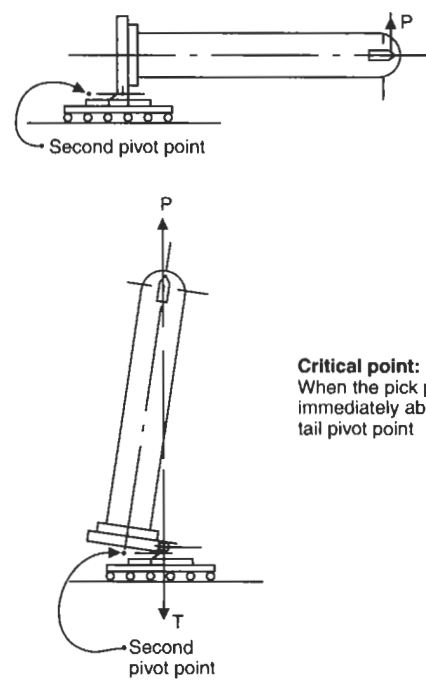

Critical point:
When the pick point is immediately above the tail pivot point

Dimensions and Moments for Various Vessel Configurations

Case 1: Top Head Lug, Top Head Trunnion, or Top Head Flange

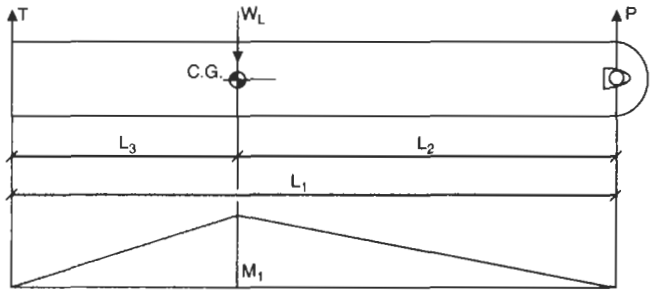

$$M_1 = \frac{W_L L_3 L_2}{L_1}$$

Case 2: Side Lug or Side Trunnion

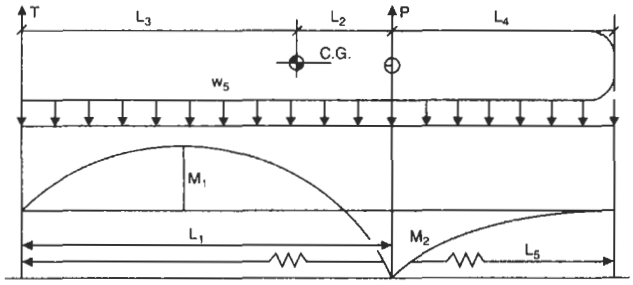

$$w_5 = \frac{W_L}{L_5}$$

$$M_1 = \frac{w_5}{8L_1^2}(L_1 + L_4)^2(L_1 - L_4)^2$$

$$M_2 = \frac{w_5 L_4^2}{2}$$

Case 3: Cone Lug or Trunnion

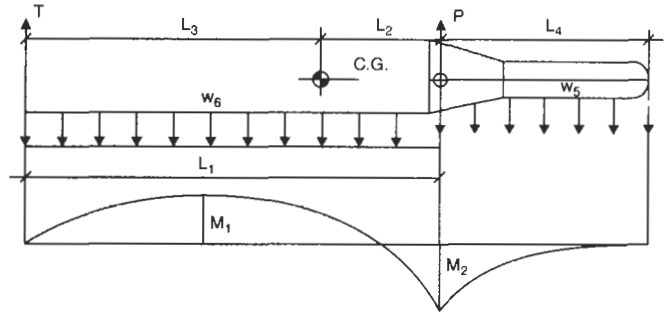

$$w_5 = \frac{W_{L_1}}{L_4} \qquad w_6 = \frac{W_{L2}}{L_1}$$

$$M_1 = \frac{w_6}{8L_1^2}(L_1 + L_4)^2(L_1 - L_4)^2$$

$$M_2 = \frac{w_5 L_4^2}{2}$$

Case 4: Cone Lug or Trunnion with Intermediate Skirt Tail

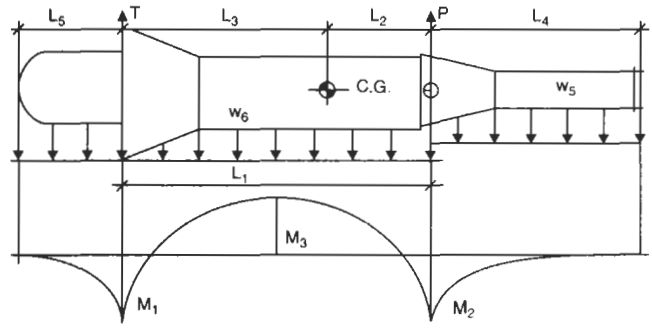

$$w_5 = \frac{W_{L_1}}{L_4} \qquad w_6 = \frac{W_{L2}}{L_1 + L_5}$$

$$M_1 = \frac{w_6 L_5^2}{2}$$

$$M_2 = \frac{w_5 L_4^2}{2}$$

$$M_3 = \left(\frac{M_1 + M_3}{2}\right) - \frac{w_6 L_1^2}{8}$$

Find Lifting Loads at Any Lift Angle for a Symmetrical Horizontal Drum

Dimensions and Forces

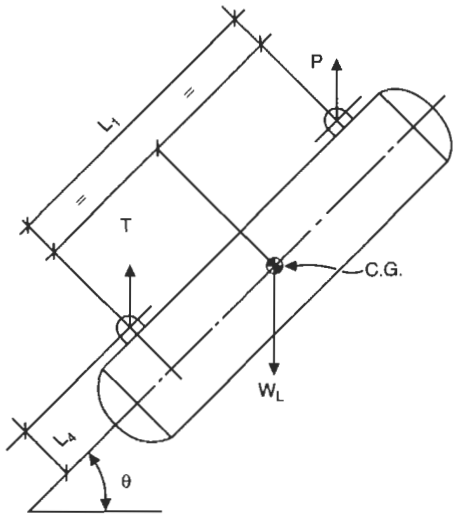

Free-Body Diagram

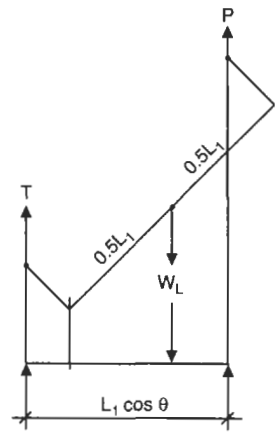

Example

Steam drum:

$W_L = 600$ kips

$L_1 = 80$ ft

$L_4 = 5$ ft

$$\frac{L_1}{2L_4} = \frac{80}{10} = 8$$

Curve is based on the following equation:

$$\frac{P}{W_L} = \frac{L_4}{L_1}(\tan\theta) + 0.5$$

Results from curve

@ $\theta = 15° = 51.6\%$
@ $\theta = 30° = 53.6\%$
@ $\theta = 45° = 56.3\%$
@ $\theta = 60° = 60.8\%$
@ $\theta = 75° = 73.3\%$

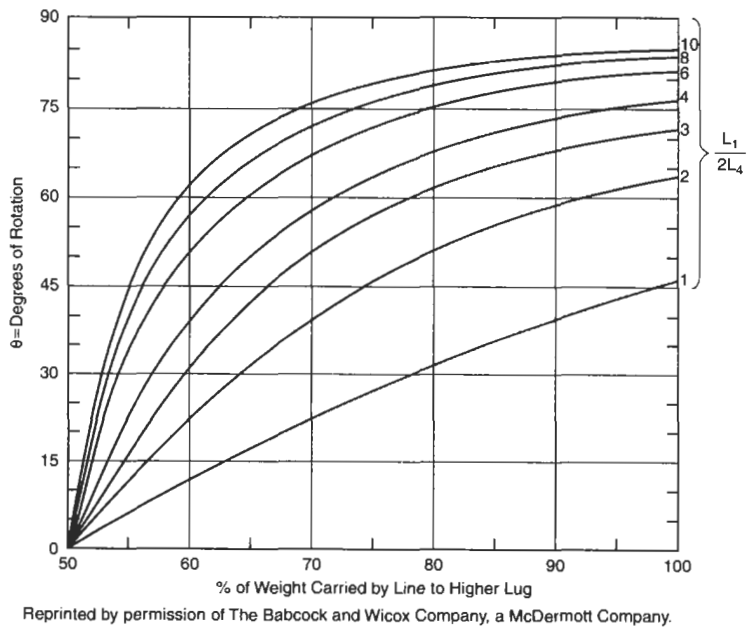

Reprinted by permission of The Babcock and Wicox Company, a McDermott Company.

Sample Problem

Distillation column:
18 ft in diameter × 280 ft OAL
260 ft tangent-to-tangent
$W_L = 200$ tons (400 kips)

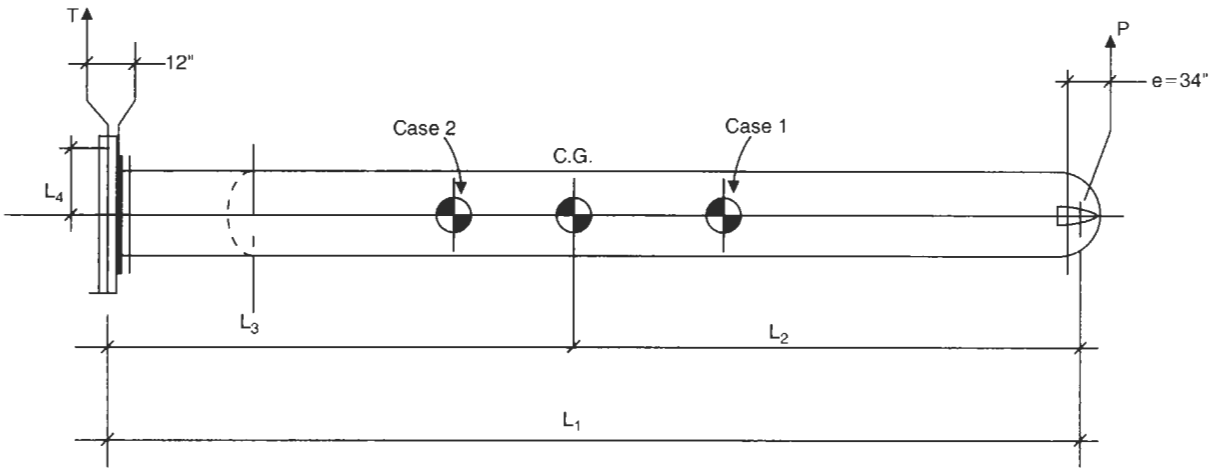

Case 1: $L_3 > L_2$

$L_1 = 280 + 2.833 + 1 = 283.83$ ft
$L_2 = 283.83 - 162 = 121.83$ ft
$L_3 = 161 + 1 = 162$ ft
$L_4 = 10$ ft

Loads T and P		
θ	T	P
0	171.7	228.3
10	170.6	229.4
20	169.6	230.4
30	168.3	231.7
40	166.8	233.2
50	164.8	235.2
60	161.9	238.1
70	156.6	243.4
80	143.2	256.8
90	0	400

Case 2: $L_3 < L_2$

$L_1 = 283.83$ ft
$L_2 = 162$ ft
$L_3 = 121.83$ ft
$L_4 = 10$ ft

Loads T and P		
θ	T	P
0	228.3	171.7
10	226.9	173.1
20	225.4	174.6
30	223.7	176.3
40	221.7	178.3
50	219.1	180.9
60	215.1	184.9
70	208.1	191.9
80	190.1	209.8
90	0	400

PROCEDURE 7-5

DESIGN OF TAIL BEAMS, LUGS, AND BASE RING DETAILS

Design of Base Plate, Skirt, and Tail Beam

Base Ring-Stiffening Configuration

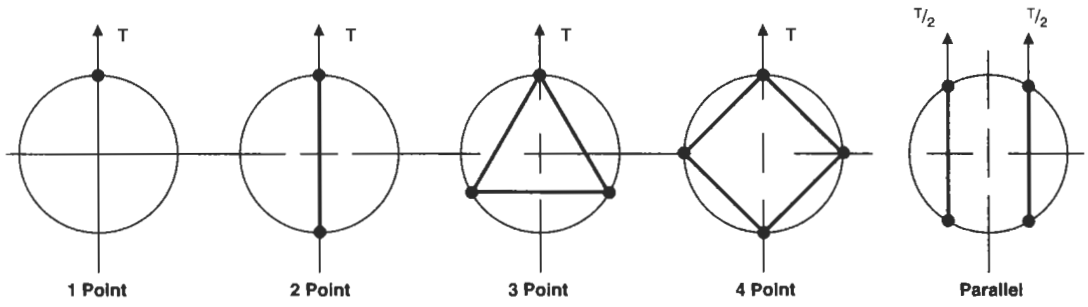

Loadings in Skirt and Base

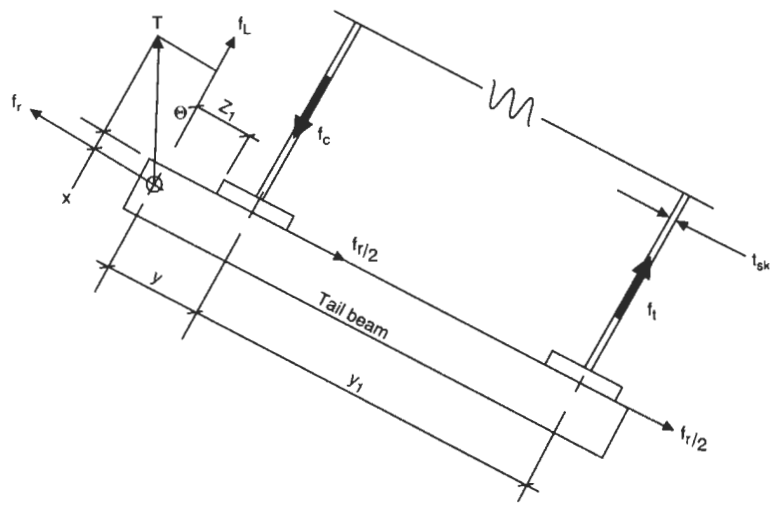

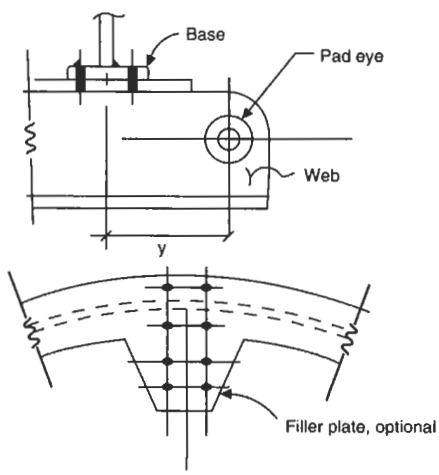

Tail Beam Connection Details

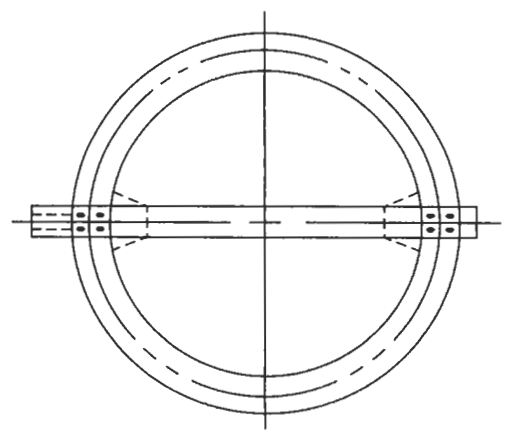

Skirt Crippling Criteria with Tailing Beam

Base Type 1: Base Ring Only

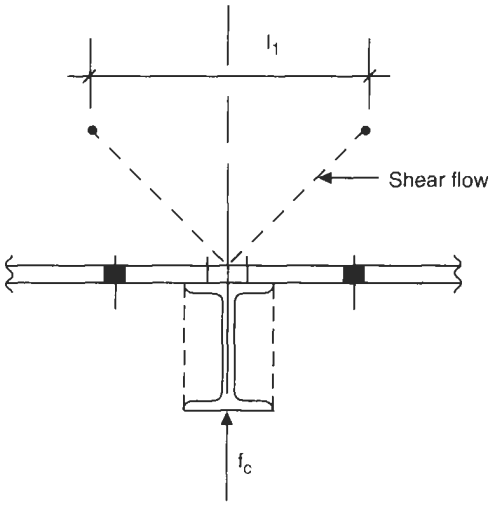

$l_1 = N + 2l_r$

$l_r = 16t_{sk}$

Base Type 2: Gussets Only

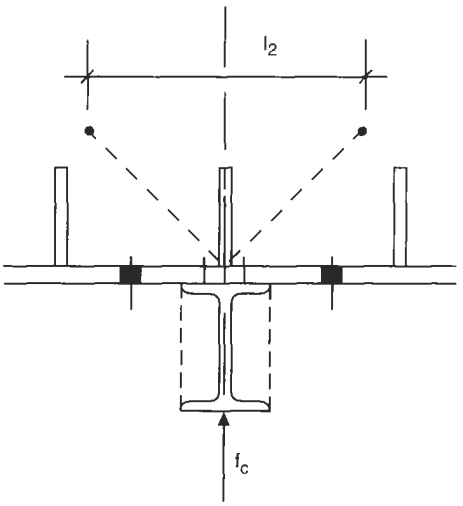

$l_2 = N + 2l_r$

$l_r = 16t_{sk}$

Base Type 3: w/Anchor Chairs

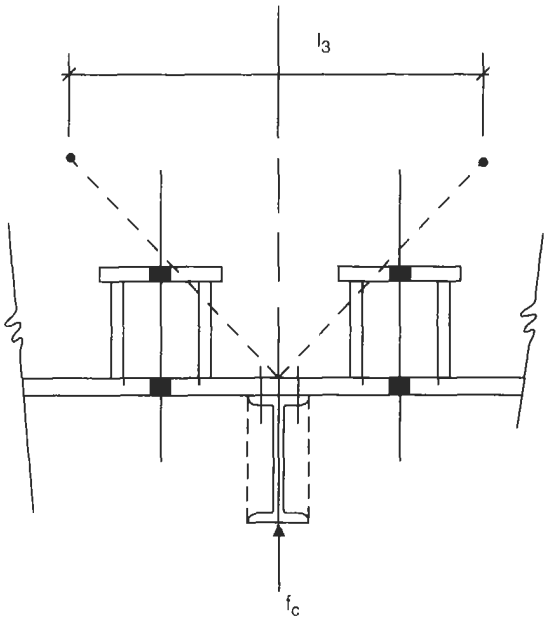

$l_3 = N + 2l_r$

$l_r = 0.55\sqrt{D_{sk}t_{sk}}$

Base Type 4: w/Continuous Top Ring

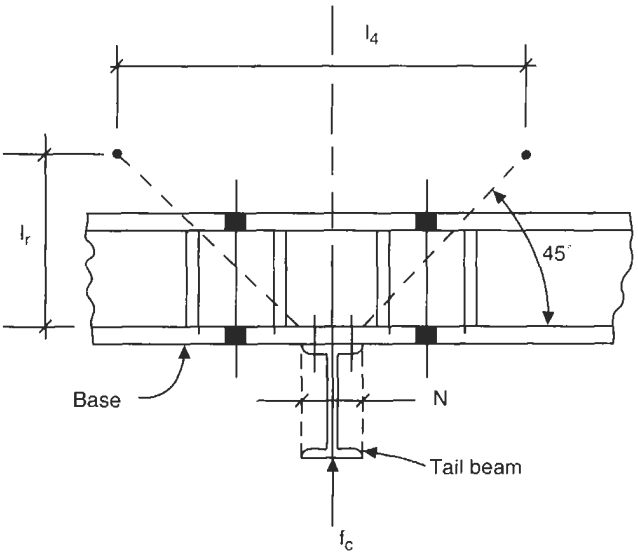

Note: N = 1 in. if a web stiffener is not used.

$l_4 = N + 2l_r$

$l_r = (L_G - t_b) + 0.55\sqrt{D_{sk}t_{sk}}$

Base Ring Design Check

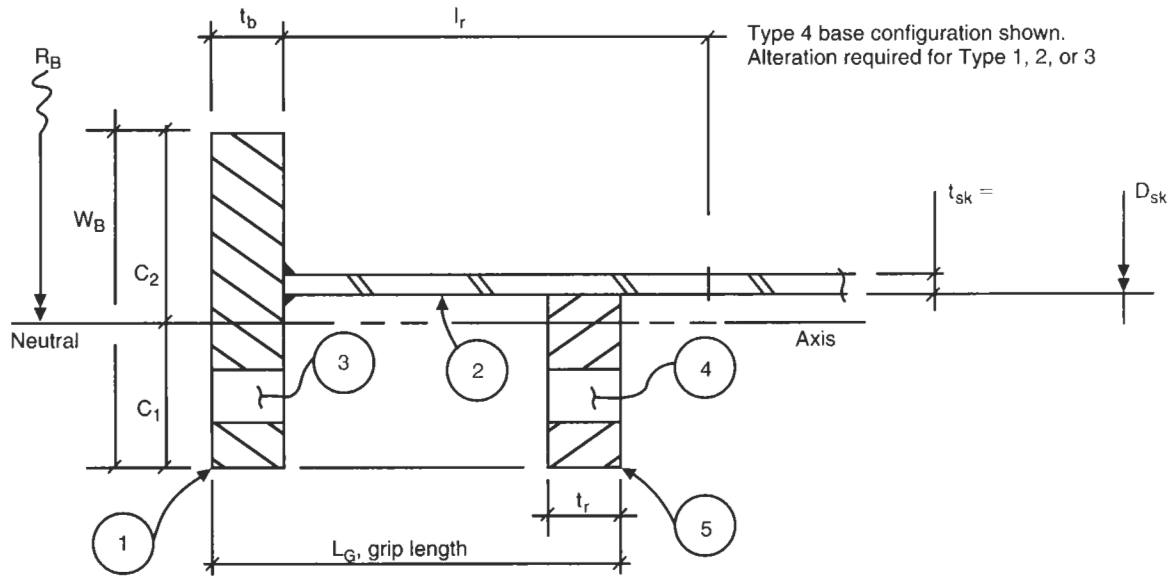

Item	A	Y	Y^2	AY	AY^2	I_o
1						
2						
3(−)						
4(−)						
5						
Σ						

$$C_1 = \frac{\left(\sum AY\right)}{\sum A}$$

$$C_2 = W_B - C_1$$

$$I = \sum AY^2 + \sum I_o - C_1 \sum AY$$

R_B = inside radius of base plate + C_2

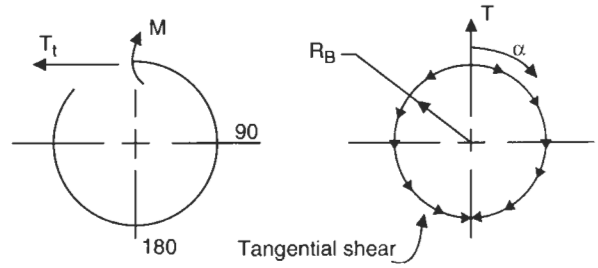

Internal Forces and Moments in the Skirt Base During Lifting

To determine the stresses in the base ring as a result of the tailing load, the designer must find the coefficients K_r and K_T based on angle α as shown and the type of stiffening in the skirt/base ring configuration.

$$M = K_r T R_B$$

$$T_t = K_T T$$

Skirt/Tail Beam Calculations

Tail Beam

- *Tailing loads, f_l and f_r.*

$$f_L = T\cos\theta$$

$$f_r = T\sin\theta$$

- *Maximum bending moment, M_b.*

$$M_b = xf_r + yf_L$$

- *Maximum bending stress, σ_b.*

$$\sigma_b = \frac{M_b}{Z}$$

Tail Beam Bolts

- *Shear load, f_s.*

$$f_s = \frac{0.5f_r}{n}$$

- *Shear stress, τ.*

$$\tau = \frac{f_s}{A_b}$$

- *Tension force, f_t.*

Note: y_1 = mean skirt diameter or centerline of bolt group if a filler plate is used.

$$f_t = \frac{M_b}{y_1}$$

Skirt

- *Tension stress in bolts, σ_T.*

$$\sigma_T = \frac{f_T}{N_b A_b}$$

- *Compressive force in skirt, f_c.*

$$f_c = f_L + f_t$$

- *Skirt crippling is dependent on the base configuration and lengths l_1 through l_4.*

N = 1 in. if web stiffeners are not used
N = width of top flange of tail beam if web stiffeners are used

- *Compressive stress in skirt, σ_c.*

$$\sigma_c = \frac{f_c}{t_{sk} l_n}$$

- *Check shear stress, τ, in base to skirt weld.*

$$\tau = \frac{f_r}{\pi D_{sk} \cdot 0.707 w_4}$$

Base Plate

- *Bending moment in base plate, M_b.*

$$M_b = K_r T R_B$$

- *Find tangential force, T_t.*

$$T_t = K_T T$$

- *Total combined stress, σ.*

$$\sigma = \frac{M_b C_1}{I} + \frac{T_t}{A}$$

Size Base Ring Stiffeners

F_1 = force in strut or tailing beam, lb
F_1 is (+) for tension and (−) for compression

- *Tension stress, σ_T.*

$$\sigma_T = \frac{F_n}{A_s}$$

- *Critical buckling stress per AISC, σ_{cr}.*

$$C_c = \sqrt{\frac{2\pi^2}{F_y}}$$

$$\sigma_{cr} = \frac{[(1 - (KL_s^2/r)/2C_c^2)]F_y}{(5/3) + ((3KL_s/r)/8C_c) - ((KL_s/r)^3/8C_c^3)}$$

- *Actual compressive stress, σ_c.*

$$\sigma_c = \frac{F_n}{A_s}$$

Note: Evaluate all struts as tension and compression members regardless of sign, because when the vessel is sitting on the ground, the loads are the reverse of the signs shown.

Two Point

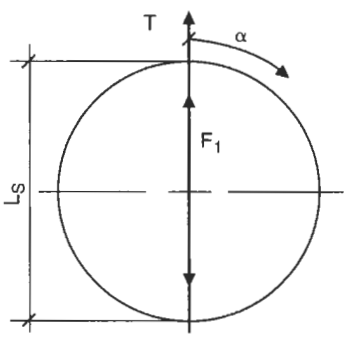

$F_1 = (+)0.5T$

Three Point

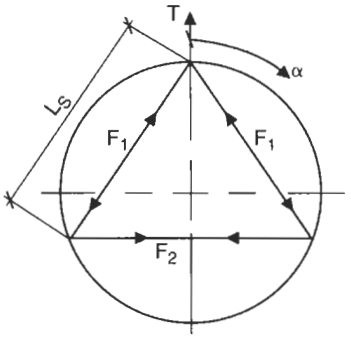

$F_1 = (+)0.453T$
$F_2 = (-)0.329T$

Parallel Beams/Struts

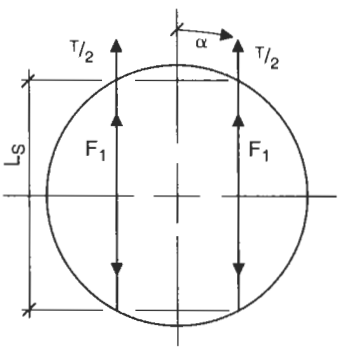

$F_1 = (+)0.25T$

Four Point

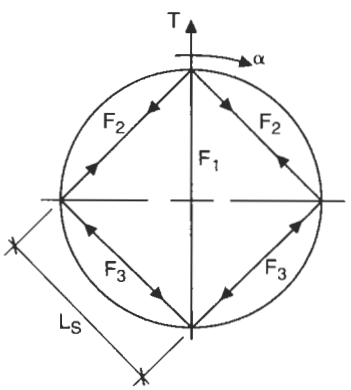

$F_1 = (+)0.5T$
$F_2 = (-)0.273T$
$F_3 = (+)0.273T$

Table 7-6
Internal Moment Coefficients for Base Ring

Angle α	One Point		Two Point		Three Point		Four Point	
	K_r	K_T	K_r	K_T	K_r	K_T	K_r	K_T
0	0.2387	−0.2387	0.0795	−0.2387	−0.0229	0.1651	0.0093	−0.1156
5	0.1961	−0.2802	0.0587	−0.2584	−0.0148	0.1708	0.0048	−0.1188
10	0.1555	−0.3171	0.0398	−0.2736	−0.0067	0.1764	0.0012	−0.1188
15	0.1174	−0.3492	0.0229	−0.2845	−0.0055	0.1747	−0.0015	−0.1155
20	0.0819	−0.3763	0.0043	−0.2908	−0.0042	0.1729	−0.0033	−0.1089
25	0.0493	−0.3983	−0.0042	−0.2926	0.0028	0.1640	−0.0043	−0.0993
30	0.0197	−0.4151	−0.0145	−0.2900	0.0098	0.1551	−0.0045	−0.0867
35	−0.0067	−0.4266	−0.0225	−0.2831	0.0103	0.1397	−0.0041	−0.0713
40	−0.0299	−0.4328	−0.0284	−0.2721	0.0107	0.1242	−0.0031	−0.0534
45	−0.0497	−0.4340	−0.0321	−0.2571	0.0093	0.1032	−0.0017	−0.0333
50	−0.0663	−0.4301	−0.0335	−0.2385	0.0078	0.0821	−0.0001	−0.0112
55	−0.0796	−0.4214	−0.0340	−0.2165	0.0052	0.0567	0.0017	0.0126
60	−0.0897	−0.4080	−0.0324	−0.1915	0.0025	0.0313	0.0033	0.0376
65	−0.0967	−0.3904	−0.0293	−0.1638	0.0031	0.0031	0.0046	0.0636
70	−0.1008	−0.3688	−0.0250	−0.1338	0.0037	−0.0252	0.0055	0.0901
75	−0.1020	−0.3435	−0.0197	−0.1020	−0.0028	−0.0548	0.0056	0.1167
80	−0.1006	−0.3150	−0.0136	−0.0688	−0.0092	−0.0843	0.0049	0.1431
85	−0.0968	−0.2837	−0.0069	−0.0346	−0.0107	−0.1134	0.0031	0.1688
90	−0.0908	−0.2500	0	0	−0.0121	−0.1425	0	0.1935
95	−0.0830	−0.2144	0.0069	0.0416	−0.0114	−0.1694	−0.0031	−0.1688
100	−0.0735	−0.1774	0.0135	0.0688	−0.0107	−0.1963	−0.0049	−0.1431
105	−0.0627	−0.1394	0.0198	0.1020	−0.0074	−0.2194	−0.0057	−0.1167
110	−0.0508	−0.1011	0.0250	0.1338	−0.0033	−0.2425	−0.0055	−0.0901
115	−0.0381	−0.0627	0.0293	0.1638	0.0041	−0.2603	−0.0046	−0.0636
120	−0.0250	−0.0250	0.0324	0.1915	0.0114	−0.2781	−0.0033	−0.0376
125	−0.0016	0.0118	0.0340	0.2165	0.0107	−0.1060	−0.0017	−0.0126
130	0.0116	0.0471	0.0335	0.2385	0.0100	0.0661	0.0001	0.0112
135	0.0145	0.0804	0.0321	0.2571	0.0083	0.0448	0.0017	0.0333
140	0.0268	0.1115	0.0284	0.2721	0.0066	0.0234	0.0031	0.0534
145	0.0382	0.1398	0.0225	0.2831	0.0045	0.0104	0.0041	0.0713
150	0.0486	0.1551	0.0145	0.2900	0.0024	−0.0026	0.0045	0.0867
155	0.0577	0.1870	0.0042	0.2926	−0.0005	−0.0213	0.0043	0.0993
160	0.0654	0.2053	−0.0083	0.2908	−0.0015	−0.0399	0.0033	0.1089
165	0.0715	0.2198	−0.0225	0.2845	−0.0028	−0.0484	0.0015	0.1155
170	0.0760	0.2301	−0.0398	0.2736	−0.0041	−0.0569	−0.0012	0.1188
175	0.0787	0.2366	−0.0587	0.2584	−0.0046	−0.0597	−0.0048	0.1188
180	0.0796	0.2387	−0.0795	0.2387	−0.0051	−0.0626	−0.0093	0.1156

Values of Moment Coefficient, K_r, for Base Ring With Two Parallel Tail Beams or Internal Struts

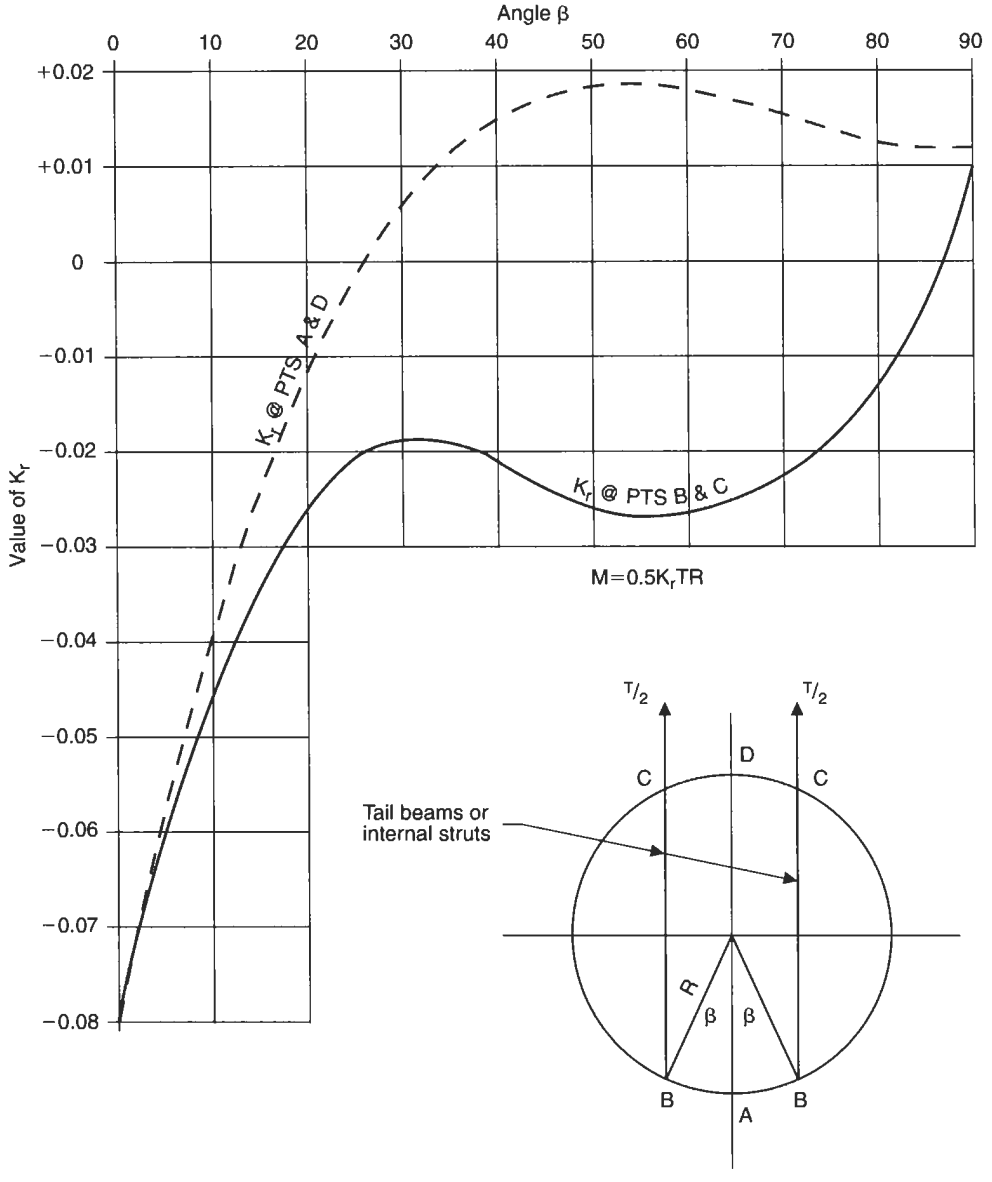

Notes:

1. Based on R. J. Roark, *Formulas for Stress and Strain*, 3rd Edition, Case 25.
2. The curve shows moment coefficients at points C and D. The moment coefficients at point A and B are equal and opposite.
3. Positive moments put the inside of the vessel in circumferential tension.
4. The signs of coefficients are for hanging loads. For point support loads underneath the vessel, the signs of the coefficients should be reversed.

Design of Vessel for Choker (Cinch) Lift at Base

- *Uniform load, p.*

$$p = \frac{T}{R}$$

- *Moments in ring at points A and C.*

$$M_A = -0.1271TR$$

$$M_c = -0.0723TR$$

- *Tension/compression forces in ring at points A and C.*

$$T_A = -0.6421T$$

$$T_c = -1.2232T$$

- *Combined stress at point A, inside of ring.*

$$\sigma_A = \frac{T_A}{A} + \frac{M_A}{Z_{in}}$$

- *Combined stress at point A, outside of ring.*

$$\sigma_A = \frac{T_A}{A} - \frac{M_A}{Z_{out}}$$

- *Combined stress at point C, inside of ring.*

$$\sigma_c = \frac{T_c}{A} + \frac{M_c}{Z_{in}}$$

- *Combined stress at point C, outside of ring.*

$$\sigma_c = \frac{T_c}{A} - \frac{M_c}{Z_{out}}$$

Note: Assume that the choker is attached immediately at the base ring even though this may be impossible to achieve. Then use the properties of the base ring for A and Z.

From R. J. Roark, *Formulas for Stress and Strain*, 5th Edition, McGraw-Hill Book Co., Table 17, Cases 12 and 18 combined.

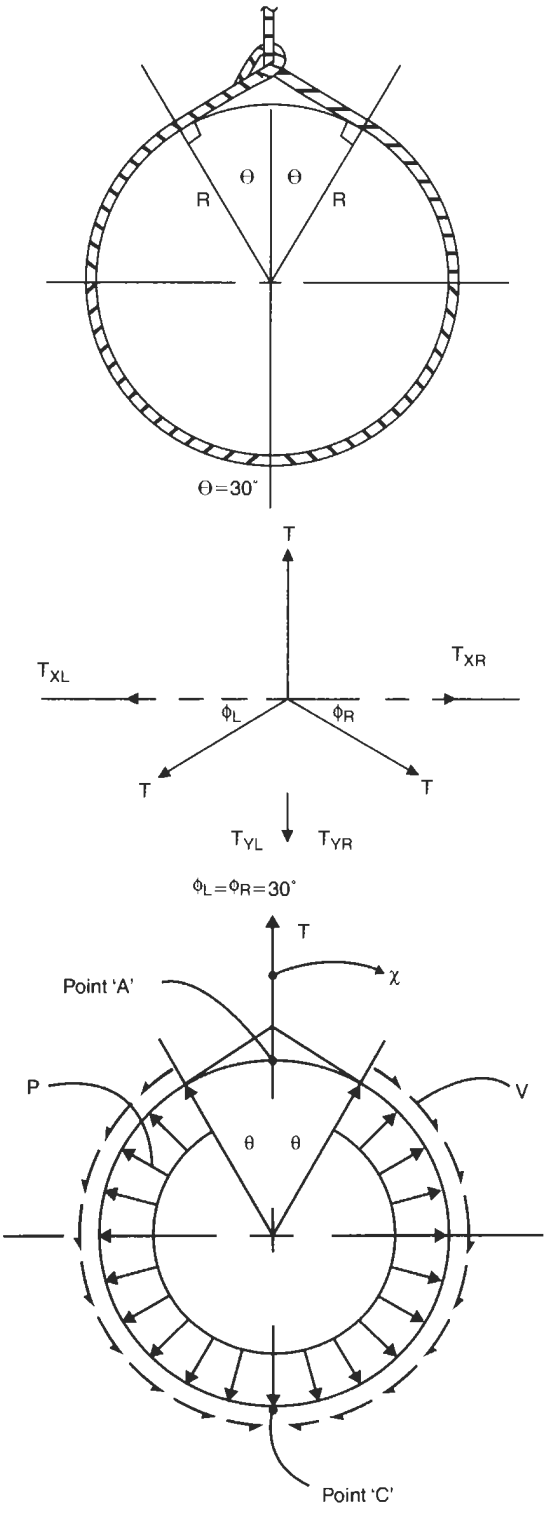

Design of Tailing Lugs

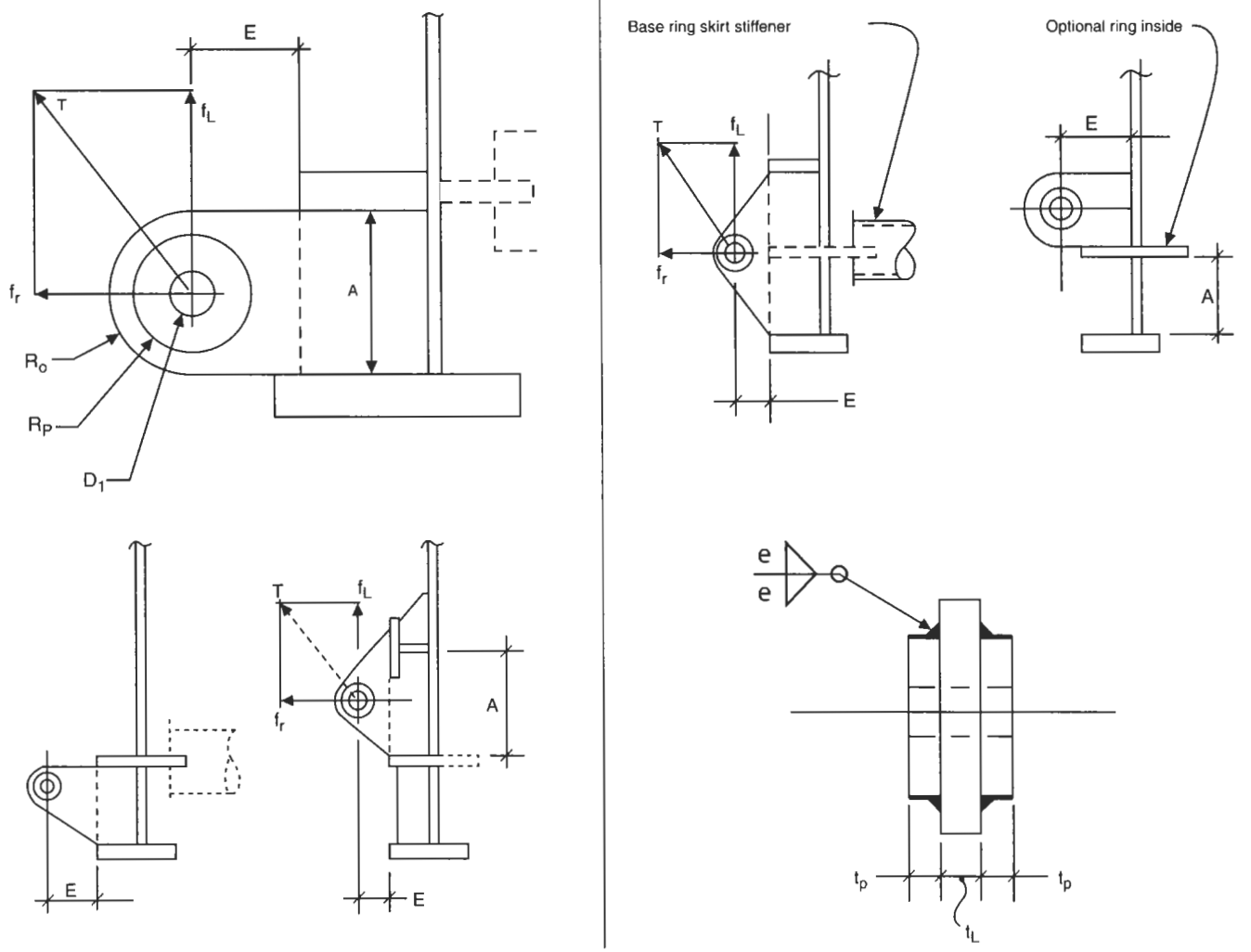

Table 7-7
Dimensions for Tailing Lugs

Tail Load (kips)	t_L	t_P	E	R_o	R_P	D_1	e
<10	None required						
10 to 20	0.75	NR	3	4	NR	2.375	NR
21 to 40	0.75	0.375			3.5		0.3125
41 to 70	1	0.5					
71 to 100	1	0.5	4	5	5.5	3.4375	0.3125
101 to 130	1.5	0.5					0.3125
131 to 170	1.625	0.75					0.375
171 to 210	1.625	0.75	5	6	5.5	4.5	0.375
211 to 250	2	0.75					0.4375
251 to 300	2.25	1					0.5
>300	Special design required						

Formulas

The tailing lug is designed like all other lugs. The forces are determined from the tailing load, T, calculated per this procedure. The ideal position for the tailing lug is to be as close as possible to the base plate for stiffness and transmitting these loads through the base to the skirt. The option of using a tailing lug versus a tailing beam is the designer's choice. Either can accommodate internal skirt rings, stiffeners, and struts.

Design as follows:

- *Area required at pin hole, A_r.*

$$A_r = \frac{T}{F_s}$$

- *Area available at pin hole, A_a.*

$$A_a = (At_L) - (D_1t_L)$$

- *Bending moment in lug, M_b.*

$$M_b = f_LE$$

- *Section modulus of lug, Z.*

$$Z = \frac{t_LA^2}{6}$$

- *Bending stress in lug, σ_b.*

$$\sigma_b = \frac{M_b}{Z}$$

- *Area required at pin hole for bearing, A_r.*

$$A_r = \frac{T}{F_p}$$

- *Area available at pin hole for bearing, A_a.*

$$A_a = D_2t_L$$

Note: Substitute $t_L + 2t_p$ for t_L in the preceding equations if pad eyes are used.

PROCEDURE 7-6

DESIGN OF TOP HEAD AND CONE LIFTING LUGS

Design of Top Head/Cone Lug

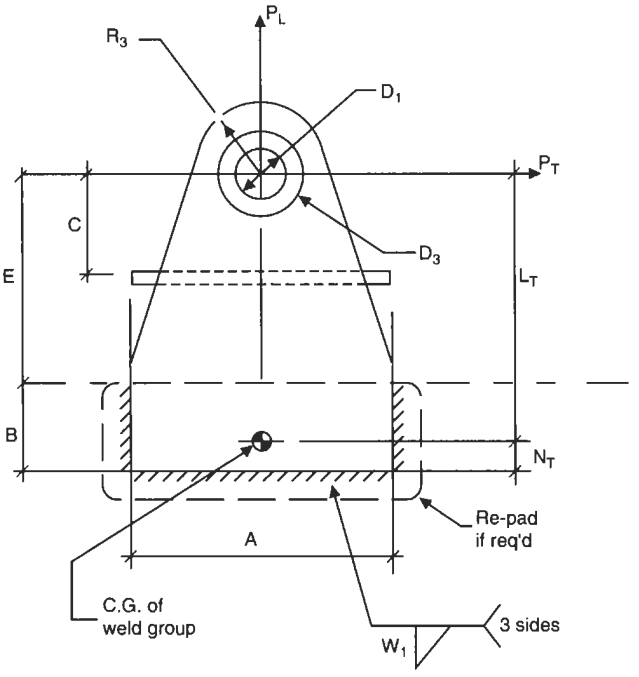

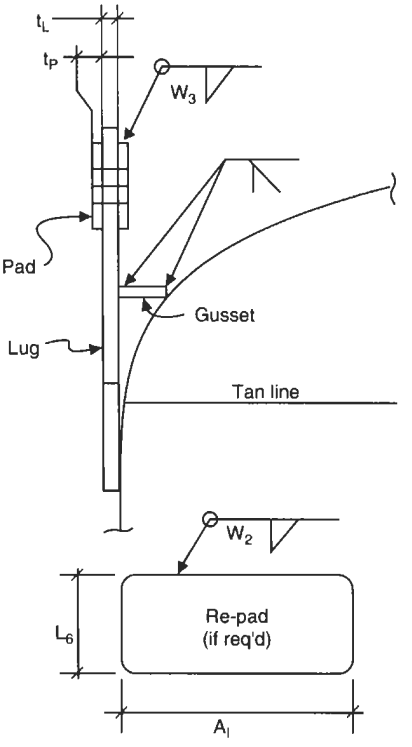

Dimensions

$$N_T = \frac{B^2}{A + 2B}$$

$$L_T = E + B - N_T$$

$$\theta_1 = \arctan \frac{2L_1}{A}$$

$$L_2 = \frac{L_1}{\sin \theta_1}$$

$$\theta_2 = \arcsin \frac{R_3}{L_2}$$

$$\theta_3 = \theta_1 + \theta_2$$

$$L_3 = \frac{R_3}{\sin \theta_3}$$

$$L_4 = 0.5A - \frac{L_1 - 0.5D_3}{\tan \theta_3}$$

$$L_5 = 0.5A - \frac{L_1 - C}{\tan \theta_3}$$

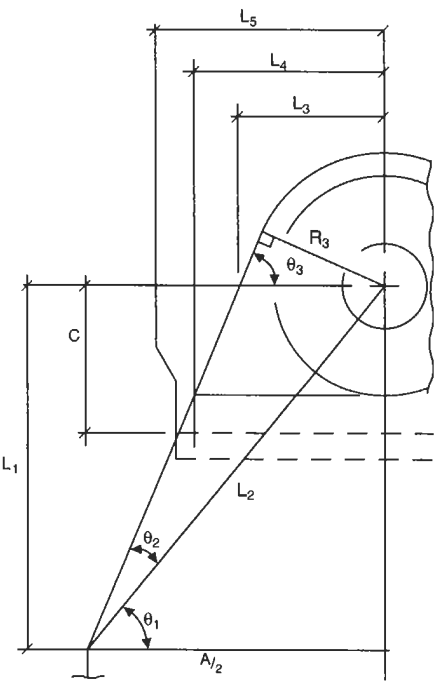

Lug

- *Maximum bending moment in lug, M_L.*

$$M_L = PE$$

- *Section modulus, lug, Z.*

$$Z = \frac{A^2 t_L}{6}$$

- *Bending stress, lug, σ_b.*

$$\sigma_b = \frac{M_L}{Z}$$

- *Thickness of lug required, t_L.*

$$t_L = -\frac{6M_L}{A^2 F_b}$$

- *Tension at edge of pad, σ_T.*

$$\sigma_T = \frac{P_L}{2L_4 t_L}$$

- *Net section at pin hole, A_p.*

$$A_p = 2L_3 t_L + 2t_p(D_3 - D_1)$$

- *Shear stress at pin hole, τ.*

$$\tau = \frac{P_L}{A_p}$$

- *Net section at top of lug, A_n.*

$$A_n = t_L\left(R_3 - \frac{D_1}{2}\right) + 2t_p\left(\frac{D_3 - D_1}{2}\right)$$

- *Shear stress at top of lug, τ.*

$$\tau = \frac{P_T}{A_n}$$

- *Pin bearing stress, σ_p.*

$$\sigma_p = \frac{P_T}{D_3(t_L + 2t_p)}$$

Check Welds

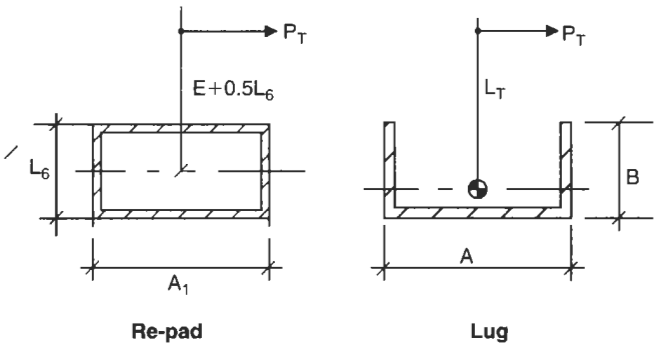

- *Polar moment of inertia, J_w.*

$$\text{Re-pad:}\quad J_w = \frac{(A_1 + L_6)^3}{6}$$

$$\text{Lug:}\quad J_w = \frac{(A + 2B)^3}{12} - \frac{B^2(A + B)^2}{(A + 2B)}$$

- *Moment, M_1.*

$$M_1 = L_T P_T$$

Lug Weld

- *Find loads on welds.*
- *Transverse shear due to P_T, f_1.*

$$f_1 = \frac{P_T}{A + 2B}$$

- *Transverse shear due to M_1, f_2.*

$$f_2 = \frac{M_1(B - N_T)}{J_w}$$

- *Longitudinal shear due to M_1, f_3.*

$$f_3 = \frac{M_1 B}{J_w}$$

- *Combined shear load, f_r.*

$$f_r = \sqrt{(f_1 + f_2)^2 + f_3^2}$$

- *Size of weld required, w_1.*

$$w_1 = \frac{f_r}{0.707F_s}$$

Note: If w_1 exceeds the shell plate thickness, then a re-pad must be used.

Re-pad Weld

- *Moment, M_2.*

$$M_2 = P_T(E + 0.5L_6)$$

- *Transverse shear due to P_T, f_1.*

$$f_1 = \frac{P_T}{2A_1 + 2L_6}$$

- *Transverse shear due to M_2, f_2.*

$$f_2 = \frac{0.5M_2L_6}{J_w}$$

- *Longitudinal shear due to M_2, f_3.*

$$f_3 = \frac{M_2L_6}{J_w}$$

- *Combined shear load, f_r.*

$$f_r = \sqrt{(f_1 + f_2)^2 + f_3^2}$$

- *Size of weld required, w_1.*

$$w_2 = \frac{f_r}{0.707F_s}$$

Pad Eye Weld

- *Unit shear load on pad, f_4.*

$$f_4 = \frac{P_T t_p \pi D_2}{2t_p + t_L}$$

- *Size of weld required, w_3.*

$$w_3 = \frac{f_4}{0.707F_s}$$

Top Head Lug for Large Loads

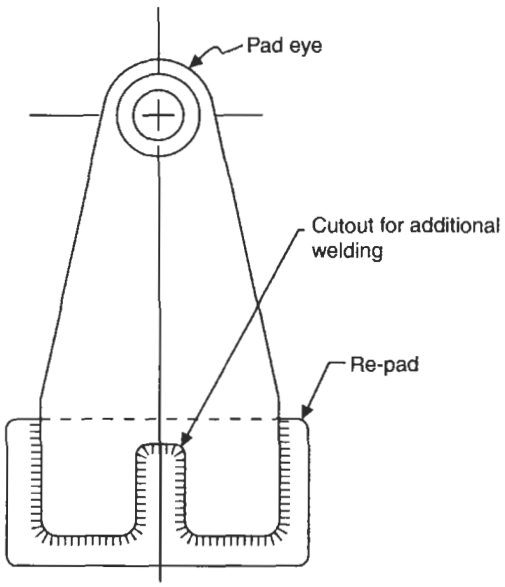

Table 7-8
Dimensions for Top Head or Cone Lugs

Type	Note	Total Erection Weight (tons)	Shackle Size (tons)	Lug Thickness t_L	A	B	C	E	R_3	W_1	Gusset Thickness t_q	Pads D_3	Pads t_p	Pads W_2	Lift Hole Dia D_1	Lug Matl. Min. Yield (psi)
36-in. to 48-in. Inside Diameter																
1-A		0–30	35	1	12	12	7	13	3	3/8	1/2				2 1/2	30,000
1-B		31–65	50	1 1/2	14	12	8	14	4	3/4	1/2	7	3/8	1/4	3	30,000
1-C	1	66–100	50	1 3/4	16	14	9	15	4 1/2	1	3/4	8	1/2	1/4	3	30,000
54-in. to 72-in. Inside Diameter																
2-A		0–30	35	1	12	12	7	15	3	3/8	1/2				2 1/2	30,000
2-B		31–65	50	1 1/2	16	14	8	17	4	5/8	1/2	7	3/8	1/4	3	30,000
2-C	1	66–100	50	1 3/4	18	14	9	18	4 1/2	7/8	1/2	8	1/2	1/4	3	30,000
2-D	2	101–150	75	2	20	16	11	20	5	1 1/4	3/4	9	3/4	3/8	3 1/2	38,000
78-in. to 108-in. Inside Diameter																
3-A		0–30	35	1	14	10	6	18	3	1/2	1/2				2 3/8	30,000
3-B		31–65	50	1	20	12	7	19	4	5/8	1/2	7	3/8	1/4	2 7/8	30,000
3-C	1	66–100	50	1 1/4	22	14	9	21	4 1/2	3/4	3/4	8	3/4	1/2	2 7/8	30,000
3-D	2	101–150	75	1 3/4	22	16	10	23	5	1 1/4	1	9	1	3/8	3 3/8	38,000
3-E	3	151–200	130	2	25	18	12	25	6 1/2	1 3/8	1	12	1	1/2	4 3/8	38,000
114-in. to 144-in. Inside Diameter																
4-A		0–30	35	1	14	10	5	20	3	1/2	1/2				2 3/8	30,000
4-B		31–65	50	1	22	14	7	22	4	1/2	1/2	7	3/8	1/4	2 7/8	30,000
4-C	1	66–100	50	1 1/4	26	14	9	25	4 1/2	3/4	3/4	8	3/4	1/4	2 7/8	30,000
4-D	2	101–150	75	1 3/4	26	16	12	27	5	1 1/4	1	9	1	3/8	3 3/8	38,000
4-E	3	151–200	130	2	28	18	12	27	6 1/2	1 3/8	1	12	1	1/2	4 3/8	38,000
150-in. to 180-in. Inside Diameter																
5-A		0–30	35	1	14	10	5	21	3	1/2	1/2				2 3/8	30,000
5-B		31–65	50	1	22	14	6	23	4	5/8	1/2	7	3/8	1/4	2 7/8	30,000
5-C	1	66–100	50	1 1/4	26	14	10	28	4 1/2	3/4	3/4	8	3/4	1/4	2 7/8	30,000
5-D	2	101–150	75	1 3/4	26	16	12	30	5	1 1/4	1	9	1	3/8	3 3/8	38,000
5-E	3	151–200	130	2	28	18	12	30	6 1/2	1 3/8	1 3/8	12	1	1/2	4 3/8	38,000
186-in. to 216-in. Inside Diameter																
6-A		0–30	35	1	16	10	4	24	3	1/2	1/2				2 3/8	30,000
6-B		31–65	50	1	24	14	6	26	4	1/2	1/2	7	3/8	1/4	2 7/8	30,000
6-C	1	66–100	50	1 1/4	28	14	9	31	4 1/2	3/4	3/4	8	3/4	1/4	2 7/8	30,000
6-D	2	101–150	75	1 3/4	28	16	12	34	5	1 1/4	1	9	1	3/8	3 3/8	38,000
6-E	3	151–200	130	2	30	18	12	34	6 1/2	1 3/8	1 3/8	12	1	1/2	4 3/8	38,000

Notes:
1. For 75-ton shackle, increase lift hole to 3.375
2. For 130-ton shackle, increase lift hole to 4.375
3. For 150-ton shackle, increase lift hole to 5.125

PROCEDURE 7-7

DESIGN OF FLANGE LUGS

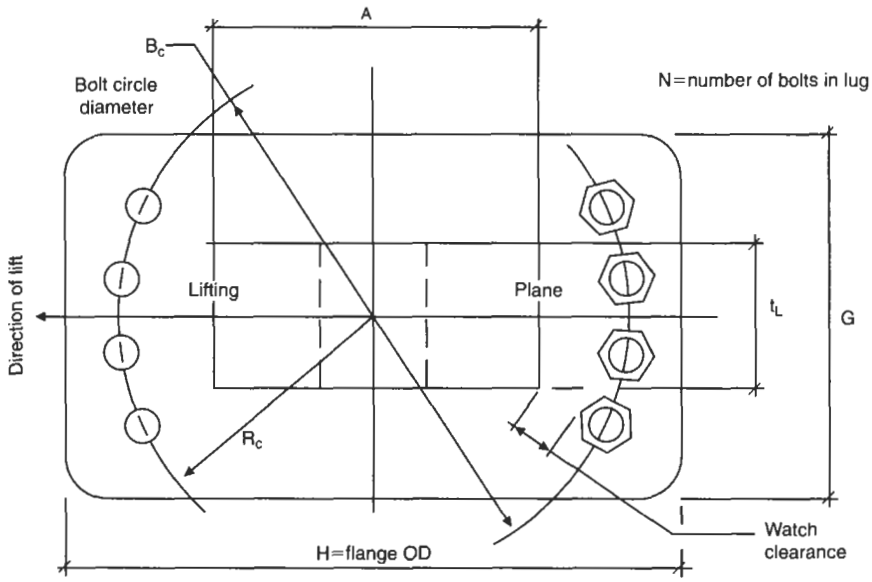

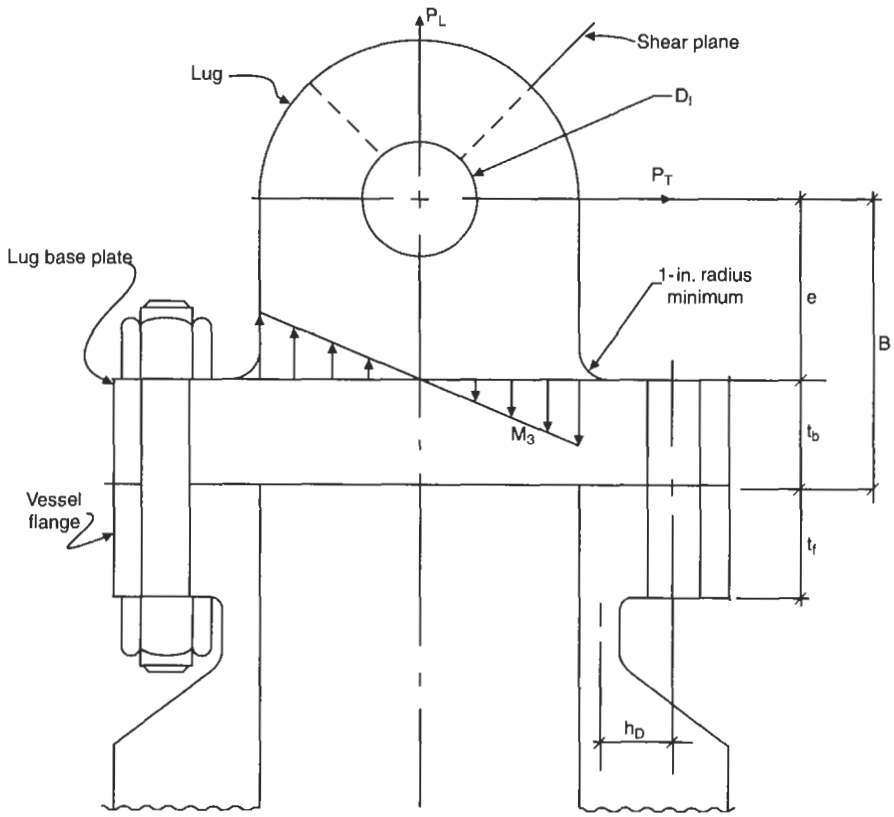

Table 7-9
Flange Lug Dimensions

Load Capacity (tons)	D_1	t_L	t_b	A	B	G	H	E
50	3.38	2	2	8	11	12	30	9
100	5	3	3	14	12	24	36	9
200	6	4	4	18	14	30	40	10
400	8	5	5	20	16	36	46	11
600	9	6	6	24	22	40	58	16
800	10	9	7	28	24	42	60	17

Table 7-10
Bolt Properties

Bolt Size	A_b	A_s	T_b	Bolt Size	A_b	A_s	T_b
0.5–13	0.196	0.112	12	2–8	3.142	2.771	243
0.625–11	0.307	0.199	19	2.25–8	3.976	3.557	311
0.75–10	0.442	0.309	28	2.5–8	4.909	4.442	389
0.875–9	0.601	0.446	39	2.75–8	5.94	5.43	418
1–8	0.785	0.605	51	3–8	7.069	6.506	501
1.125–8	0.994	0.79	56	3.25–8	8.3	7.686	592
1.25–8	1.227	1	71	3.5–8	9.62	8.96	690
1.375–8	1.485	1.233	85	3.75–8	11.04	10.34	796
1.5–8	1.767	1.492	103	4–8	12.57	11.81	910
1.75–8	2.405	2.082	182				

Table 7-11
Values of S_u

Bolt Dia, d_b	Material	S_u(ksi)
<1	A-325	120
1.125–1.5	A-325	105
1.625–2.5	A-193-B7	125
2.625–4	A-193-B7	110

Top Flange Lug

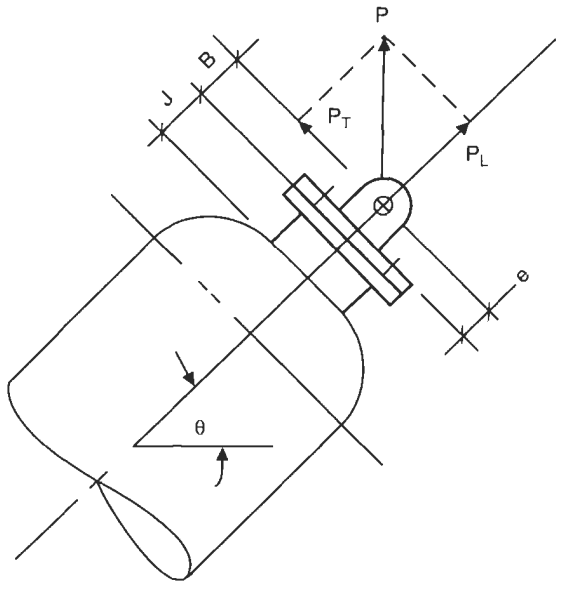

$$P_L = P \sin \theta$$

$$P_T = P \cos \theta$$

$$P_E = \frac{P_L}{A} + \frac{3P_T e}{A^2}$$

$$M_1 = P_T B$$

$$M_2 = P_T(B + J)$$

$$M_3 = P_T e$$

$$M_u = X_n \cos \alpha_n \, N_b$$

$$M_a = \frac{M_u M_1}{\sum M_u}$$

$$X_n = R_b \cos \alpha_n$$

$$y_n = R_b \sin \alpha_n$$

Side Flange Lug

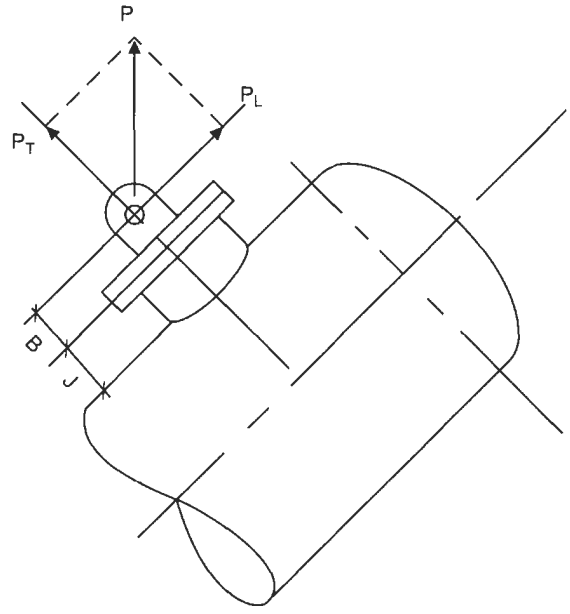

$$F_n = \frac{M_a}{X_n N_b}$$

$$f_s = \frac{P_T}{N}$$

$$\sigma_T = \frac{F_n}{A_s}$$

$$F_s = 15 \text{ ksi}\left(1 - \frac{\sigma_T A_b}{T_b}\right)$$

$$A_s = 0.7854(d - 0.1218)^2$$

$$\tau = \frac{f_s}{A_s} < F_s$$

$$T_b = 0.7 S_u A_s$$

$$0.6F_y < F_T < 40 \text{ ksi}$$

Design Process

1. Determine loads
2. Check of lug:
   a. Shear at pin hole.
   b. Bending of lug.
   c. Bearing at pin hole.
3. Check of base plate.
4. Check of nozzle flange.
5. Check of flange bolting.
6. Check of local load at nozzle to head or shell junction.

Step 1: Determine loads.

- Determine loads P_T and P_L for various lift angles, θ.
- Determine uniform loads w_1 and w_2 for various angles, θ.
- Using w_1 and w_2, solve for worst case of combined load, P_E.
- Determine worst-case bending moment in lug, M_3.

Step 2: Check of lug.

a. Shear at pin hole:

- *Area required, A_r.*

$$A_r = \frac{P_E}{F_s}$$

- *Area available at pin hole, A_a.*

$$A_a = (At_L) - (D_1 t_L)$$

b. Bending of lug due to M_3:

- *Section modulus, Z.*

$$Z = \frac{t_L A^2}{6}$$

- *Bending stress, lug, σ_b.*

$$\sigma_b = \frac{M_3}{Z}$$

c. Bearing at pin hole:

- *Bearing required at pin hole A_r.*

$$A_r = \frac{P_E}{F_P}$$

- *Bearing available, A_a.*

$$A_a = D_2 t_L$$

Maximum Tension in Lug

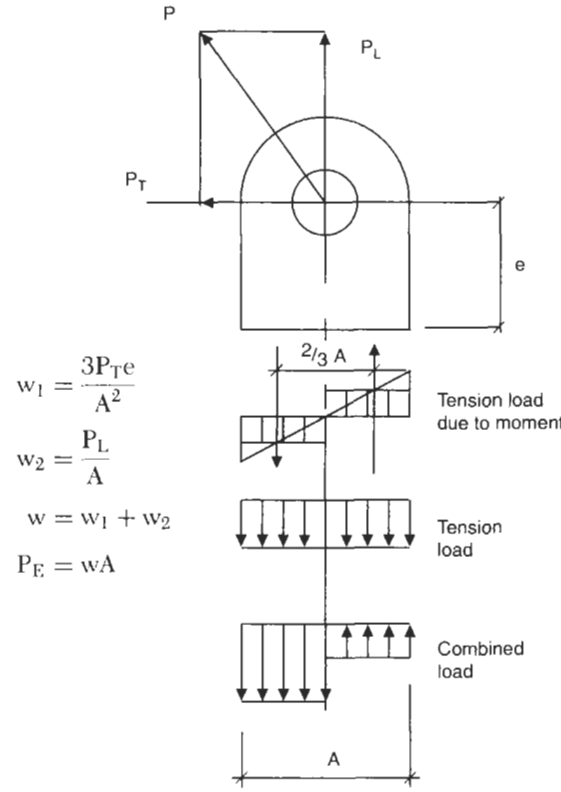

$$w_1 = \frac{3P_T e}{A^2}$$

$$w_2 = \frac{P_L}{A}$$

$$w = w_1 + w_2$$

$$P_E = wA$$

Check of Nozzle Flange

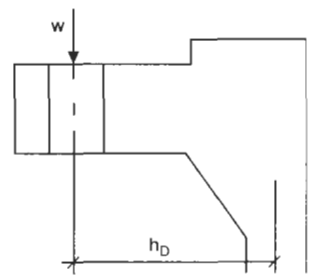

- *Unit load, w.*

$$w = \frac{P_E}{\pi B_c}$$

- *Bending moment, M.*

$$M = wh_D$$

- *Bending stress, σ_b.*

$$\sigma_b = \frac{6M}{t_f^2}$$

Bolt Loads for Rectangular Lugs

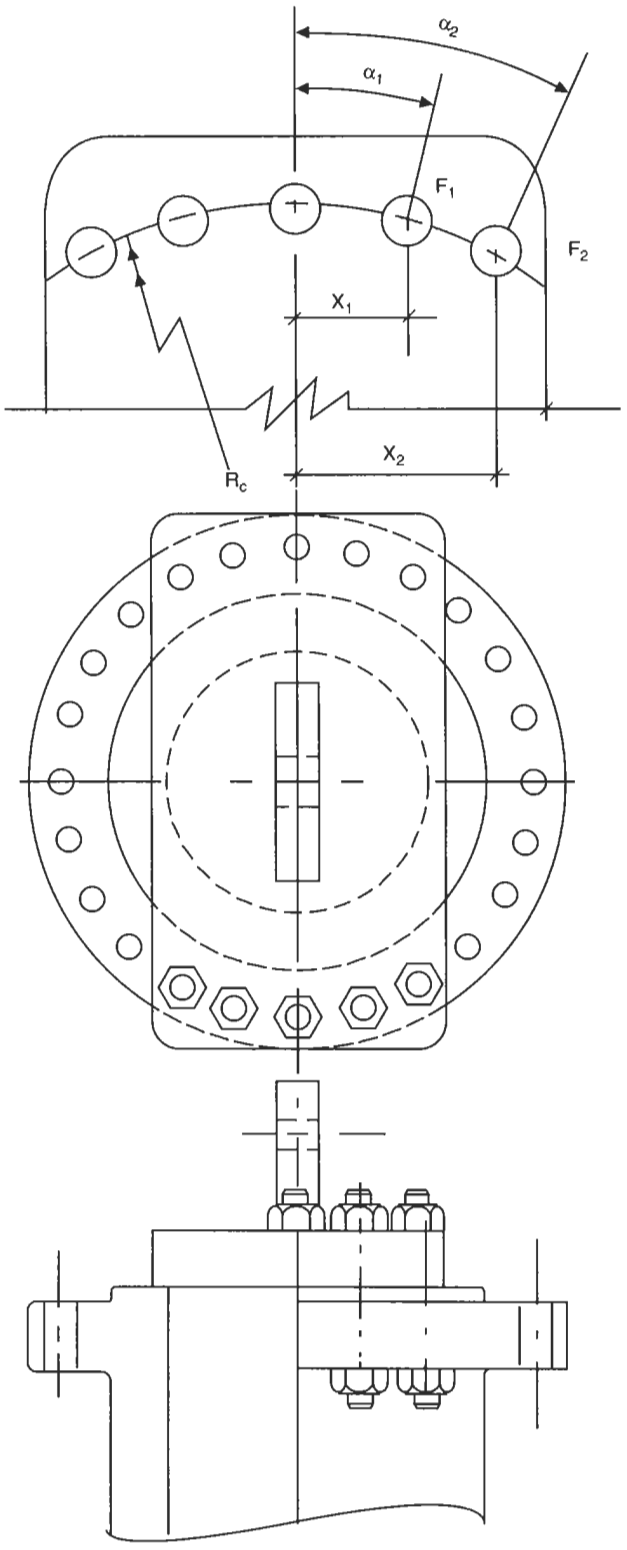

Design of Full Circular Base Plate for Lug

- If a full circular plate is used in lieu of a rectangular plate, the following evaluation may be used.

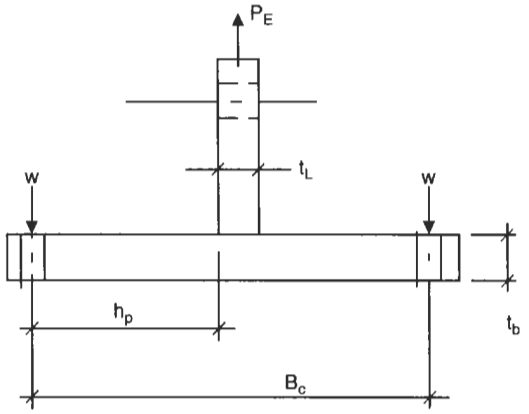

- *Unit load on bolt circle, w.*

$$w = \frac{P_E}{\pi B_c}$$

- *Edge distance from point of load, h_p.*

$$h_p = \frac{B_C - t_L}{2}$$

- *Bending moment, M.*

$$M = wh_p$$

- *Bending stress, σ_b.*

$$\sigma_b = \frac{6M}{t_b^2}$$

- *Check bolting same as rectangular flange.*

Design of Lug Base Plate

(From R. J. Roark, *Formulas for Stress and Strain*, McGraw-Hill Book Co, 4th Edition, Table III, Case 34.)

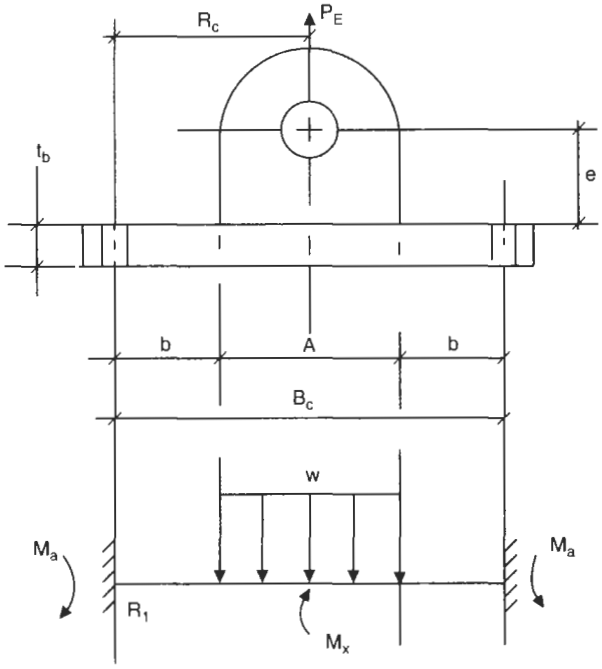

- *Uniform load, w.*

$$w = \frac{P_E}{A}$$

- *End reaction, R_1.*

$$R_1 = \frac{wA}{2}$$

- *Edge moment, M_a.*

$$M_a = \frac{wA}{24B_c}\left[\frac{24R_c^3}{B_c} - \frac{6(b+A)A^2}{B_c} + \frac{3A^3}{B_c} + 4A^2 - 24R_c^2\right]$$

- *Moment at midspan, M_x.*

$$M_x = M_a + R_1R_c - \frac{wA}{2}\left[\frac{(R_c - b)^2}{A}\right]$$

- *Thickness required, t_b.*

$$t_b = \sqrt{\frac{6M_x}{GF_b}}$$

Check of Bolts

Case 1: Bolts on Centerline

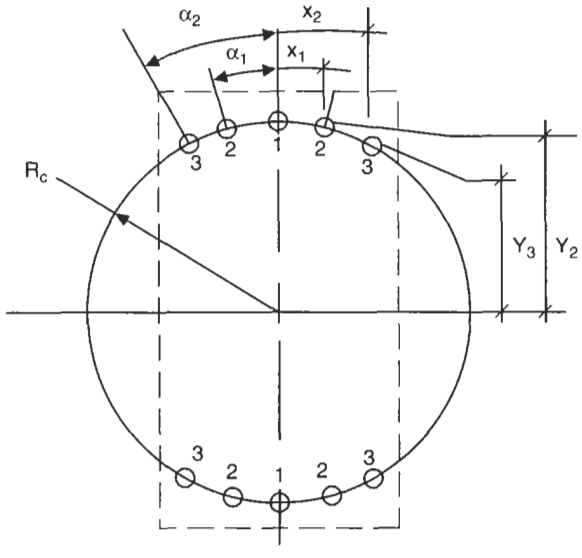

Case 2: Bolts Straddle Centerline

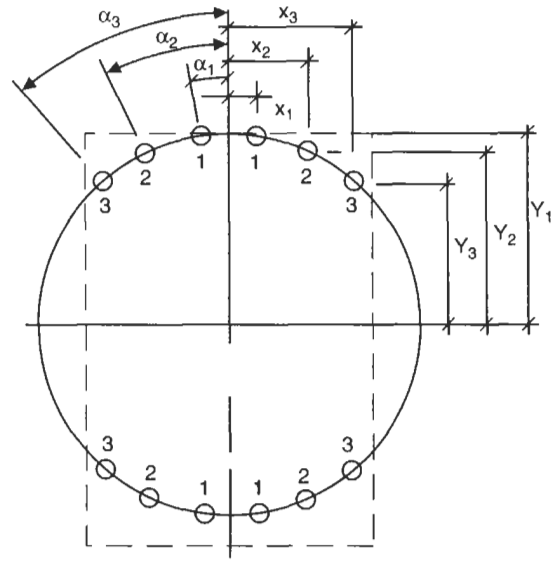

Bolt	1	2	3	4	5	Bolt	1	2	3	4	5
α_n						α_n					
x_n						x_n					
y_n						y_n					
N_b						N_b					
M_u						M_u					
M_a						M_a					
F_n						F_n					
σ_T						σ_T					
F_s						F_s					

Sample Problem: Top Flange Lug

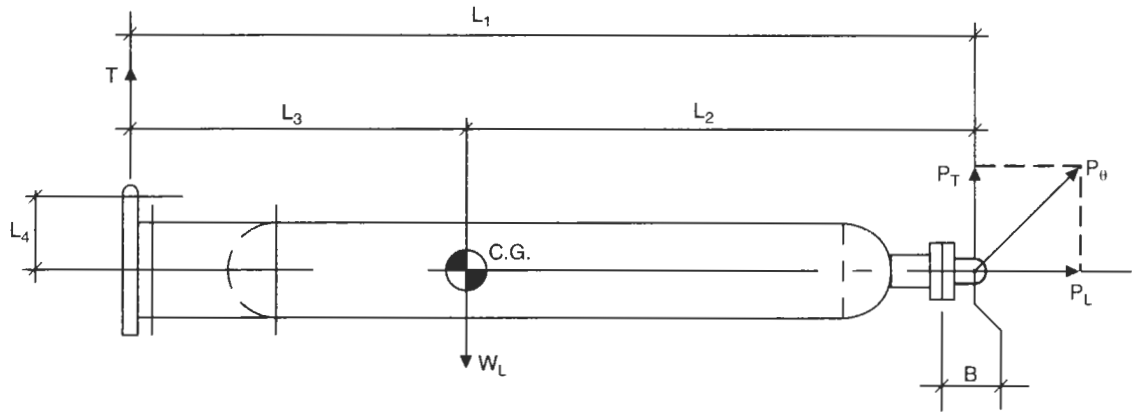

Given

$L_1 = 90\,\text{ft}$

$L_2 = 50\,\text{ft}$

$L_3 = 40\,\text{ft}$

$L_4 = 9.5\,\text{ft}$

F_y bolting $= 75\,\text{ksi}$

F_y lug $= 36\,\text{ksi}$

F_y flange $= 36\,\text{ksi}$

$F_s = 0.4(36) = 14.4\,\text{ksi}$

$F_T = 0.6(36) = 21.6\,\text{ksi}$

$F_b = 0.66(36) = 23.76\,\text{ksi}$

$W_L = 1200\,\text{kips}$

$B_c = 54\,\text{in.}$

$R_c = 27\,\text{in.}$

$B = 22\,\text{in.}$

$t_b = 6\,\text{in.}$

$t_L = 6\,\text{in.}$

$t_f = 11\,\text{in.}$

$D_1 = 9\,\text{in.}$

$D_2 = 8\,\text{in.}$

Bolt size = 3-1/4-8 UNC

$A_b = 8.3\,\text{in.}^2$

$A_s = 7.686\,\text{in.}^2$

$T_b = 592\,\text{kips}$

$S_u = 110\,\text{ksi}$

$e = 16\,\text{in.}$

$G = 40\,\text{in.}$

$A = 24\,\text{in.}$

$h_D = 9.5\,\text{in.}$

$$b = \frac{B_c - A}{2}$$

Results

P_T max $= 537\,\text{kips}$ @ $\theta = 10°$

P_L max $= 1200\,\text{kips}$ @ $\theta = 90°$

P_E max $= 1277\,\text{kips}$ @ $\theta = 40°$

σ_T bolt, max $= 20.11\,\text{ksi} < 40\,\text{ksi}$

τ bolt, max $= 6.98\,\text{ksi} < 10.77\,\text{ksi}$

Step 1: Determine loads.										
	Angle of Lift, Degrees									
θ	**0**	**10**	**20**	**30**	**40**	**50**	**60**	**70**	**80**	**90**
T_θ	666	654	642	629	613	592	564	517	417	0
P_θ	534	546	558	571	587	608	636	683	783	1200
P_T	534	537	525	494	450	391	318	234	136	0
P_L	0	95	191	286	377	465	551	642	771	1200
w_1	0	3.96	7.96	11.92	15.71	19.38	22.96	26.75	32.13	50
w_2	44.5	44.75	43.75	41.16	37.5	32.58	26.5	19.5	11.33	0
w	44.5	48.71	51.71	53.08	53.21	51.96	49.46	46.25	43.46	50
P_E	1068	1169	1241	1274	1277	1247	1187	1110	1043	1200
M_1	11,748	11,814	11,550	10,868	9900	8602	6996	5148	2992	0
f_s, bolts (10)	53.4	53.7	52.5	49.4	45	39.1	31.8	23.4	13.6	0
f_s, bolts (12)	44.5	44.75	43.75	41.16	37.5	32.6	26.5	19.5	11.33	0
T, bolts (10)	6.94	6.98	6.83	6.42	5.85	5.08	4.13	3.04	1.77	0
T, bolts (12)	5.79	5.82	5.69	5.35	4.88	4.24	3.44	2.53	1.47	0
Step 2: Check bolts for tension load.										
Case 1: N = (10) Bolts						**Case 2: N = (12) Bolts**				
α_n	0	15	30			7.5	22.5	37.5		
cos α_n	1	0.965	0.866			0.991	0.923	0.793		
X_n	0	7	13.5			3.52	10.33	16.44		
N_b	2	4	4			4	4	4		
M_u	0	27.05	46.76	$\Sigma = 73.81$		13.95	38.13	52.15	$\Sigma = 104.22$	
M_a	0	4329	7484	$\Sigma = 11{,}814$		1581	4322	5911	$\Sigma = 11{,}814$	
F_n	0	154.6	138.6			112.3	104.6	89.9		
σ_T		20.11	18.03			14.61	13.61	11.7		
F_s		10.77	11.21			11.93	12.13	12.53		

1.0 Check Lug

a. Shear at pin hole:

- *Area required, A_r.*

$$A_r = \frac{P_E}{F_S} = \frac{1277}{14.4} = 88.68 \text{ in.}^2$$

- *Area available at pin hole, A_a.*

$$A_a = (At_L) - (D_1 t_L) = (24 \cdot 6) - (9 \cdot 6) = 90 \text{ in.}^2$$

b. Bending of lug due to M_3:

- *Maximum moment, M_3.*

$$M_3 = P_T e = 537(16) = 8592 \text{ in.} - \text{K}$$

- *Section modulus, Z.*

$$Z = \frac{t_L A^2}{6} = \frac{(6 \cdot 24^2)}{6} = 576 \text{ in.}^3$$

- *Bending stress, lug, σ_b.*

$$\sigma_b = \frac{M_3}{Z} = \frac{8592}{576} = 14.91 \text{ ksi}$$

- *Thickness required, t_L.*

$$t_L = \frac{6M}{F_b A^2} = \frac{6 \cdot 8592}{23.76(24^2)} = 3.76 \text{ in.}$$

c. Bearing at pin hole:

- *Bearing required at pin hole, A_r.*

$$A_r = \frac{P_E}{F_P} = \frac{1277}{32.4} = 39.41 \text{ in.}^2$$

- *Bearing available, A_a.*

$$A_a = D_2 t_L = 8 \cdot 6 = 48 \text{ in.}^2$$

2.0 Check Lug Base Plate

- *Uniform load, w.*

$$w = \frac{P_E}{A} = \frac{1277}{24} = 53.2 \frac{\text{k}}{\text{in.}}$$

- *End reaction, R_1.*

$$R_1 = \frac{P_E}{2} = \frac{1277}{2} = 638.5 \text{ kips}$$

- *Edge moment, M_a.*

$$M_a = \frac{wA}{24B_c}\left[\frac{24R_c^3}{B_c} - \frac{6(b+A)A^2}{B_c} + \frac{3A^3}{B_c} + 4A^2 - 24R_c^2\right]$$

$$M_a = 0.985(8748 - 2496 + 768 + 2304 - 17{,}496)$$
$$= -8049 \text{ in.-kips}$$

- *Moment at midspan, M_x.*

$$M_x = M_a + R_1 R_c - \frac{wA}{2}\left[\frac{(R_c - b)^2}{A}\right]$$

$$M_x = -8049 + 17{,}240 - 3831 = 5360 \text{ in.-kips}$$

- *Section modulus, Z.*

$$Z = \frac{(t_b^2 G)}{6} = \frac{(6^2 \cdot 40)}{6} = 240 \text{ in.}^3$$

- *Bending stress, σ_b.*

$$\sigma_b = \frac{M_x}{Z} = \frac{5360}{240} = 22.33 \text{ ksi}$$

- *Allowable bending stress, F_b.*

$$F_b = 0.66F_y = 0.66(36) = 23.76 \text{ ksi}$$

3.0 Check of Vessel Flange

- *Unit load, w.*

$$w = \frac{P_E}{\pi B_c} = \frac{1277}{\pi 54} = 7.52 \frac{\text{K}}{\text{in.}}$$

- *Bending moment, M_b.*

$$M_b = wh_D = 7.52(9.2) = 69.25 \text{ in.-kips}$$

- *Bending stress, σ_b.*

$$\sigma_b = \frac{6M_b}{t_f^2} = \frac{[6(69.25)]}{11.25^2} = 3.28 \text{ ksi}$$

Top Flange Lugs—Alternate Construction

50-Ton Capacity

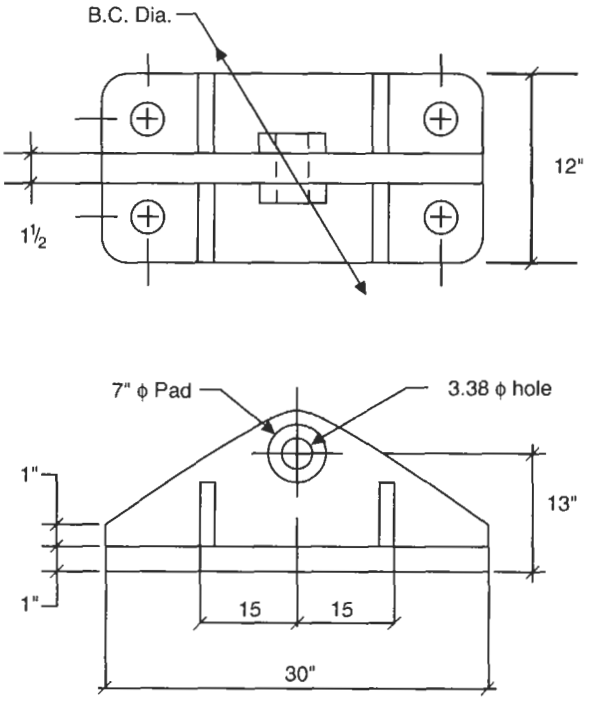

200-Ton Capacity

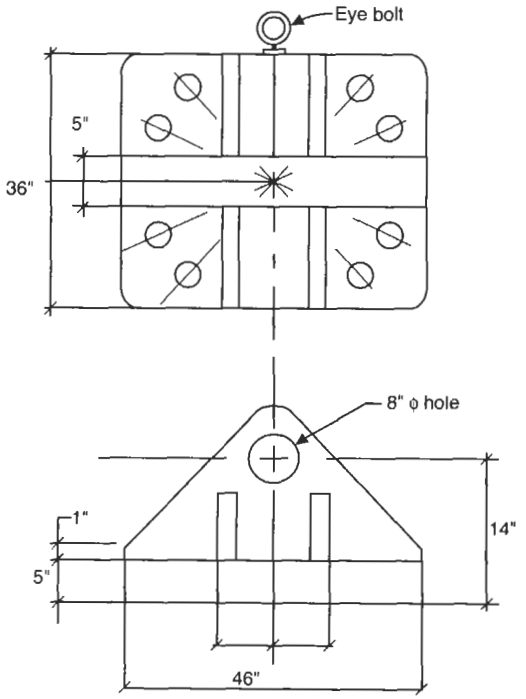

400-Ton Capacity

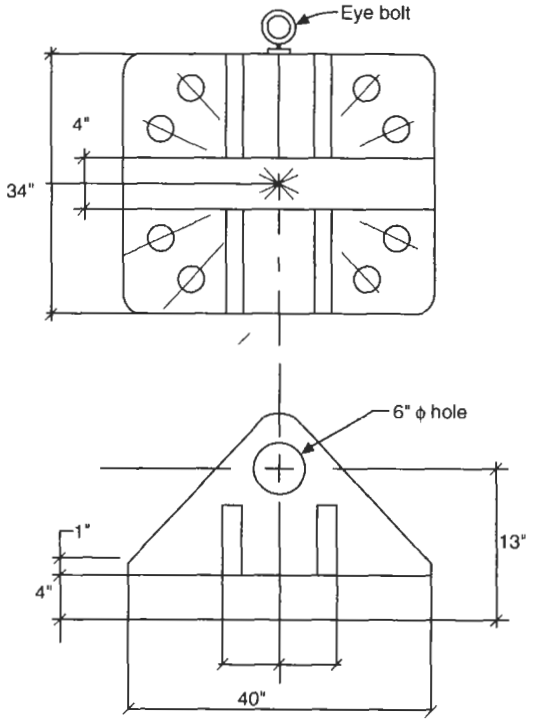

600-Ton Capacity

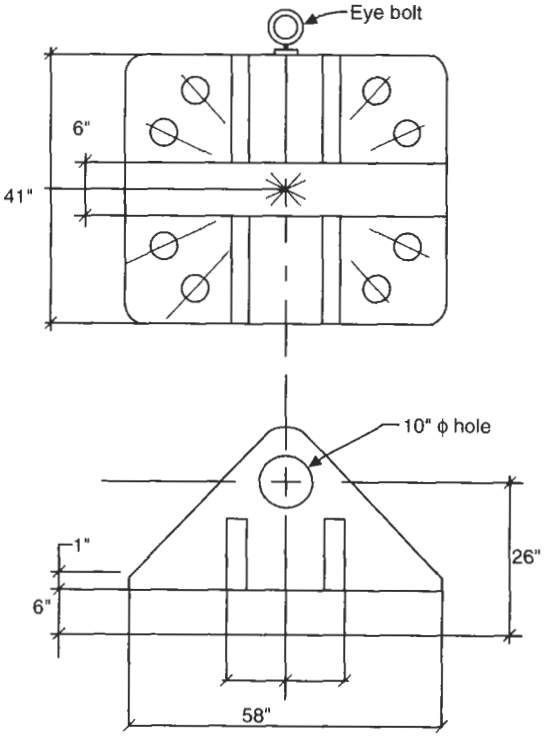

PROCEDURE 7-8

DESIGN OF TRUNNIONS

Lug Dimensions

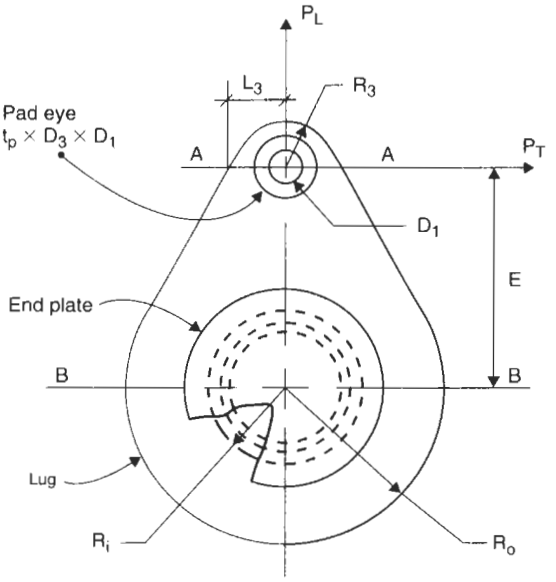

Dimensions for Trunnion

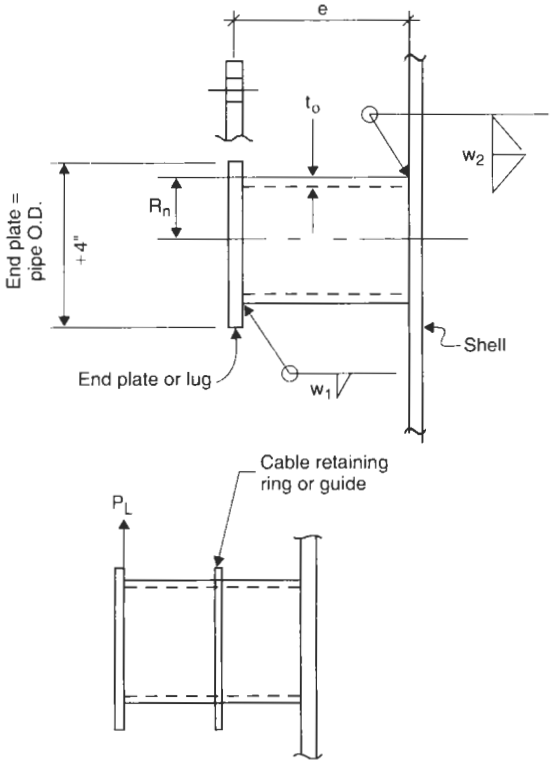

Type 1: Trunnion and Fixed Lug

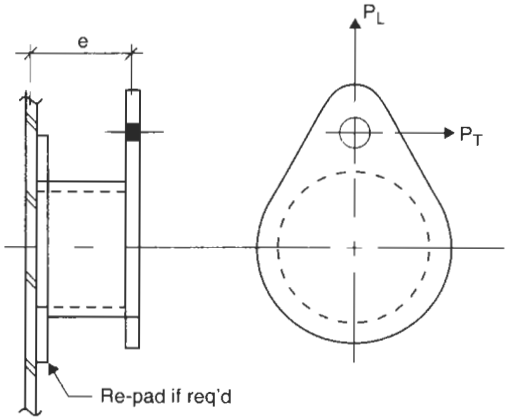

Type 2: Trunnion and Rotating Lug

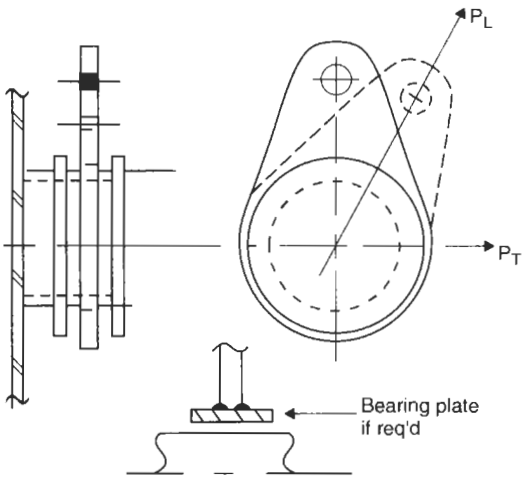

Type 3: Trunnion Only

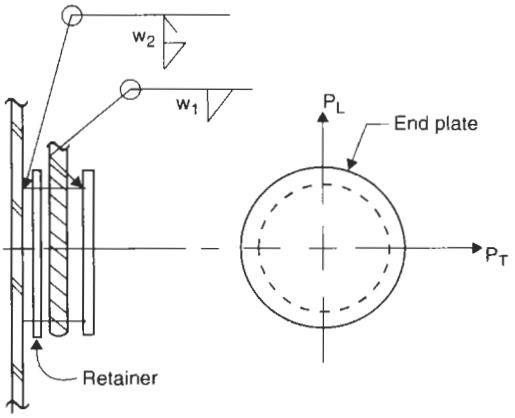

Type 1: Trunnion and Fixed Lug

There are four checks to be performed:

1. Check lug.
2. Check trunnion.
3. Check welds.
4. Check vessel shell.

Check Lug

Transverse (vessel horizontal).

$$M = P_T E \qquad \text{and} \qquad Z = \frac{4R_o^2 t_L}{6}$$

Therefore,

$$t_L = \frac{1.5 P_T E}{R_o^2 F_b}$$

Longitudinal (vessel vertical).

- *Cross-sectional area at pin hole, A_p.*

$$A_p = 2l_3 t_L + 2t_p(D_3 - D_1)$$

- *Cross-sectional area at top of lug, A_n.*

$$A_n = t_L\left(R_T - \frac{D_1}{2}\right) + 2t_p\left(\frac{D_3 - D_1}{2}\right)$$

- *Shear stress, τ.*

$$\tau = \frac{P_L}{A_p} \qquad \text{or} \qquad \tau = \frac{P_L}{A_n}$$

- *Pin bearing stress, σ_p.*

$$\sigma_p = \frac{P_L}{D_2(t_L + 2t_p)}$$

Check Trunnion

- *Longitudinal moment, M_L (vessel vertical).*

$$M_L = P_L e$$

- *Torsional moment, M_T (vessel horizontal).*

$$M_T = P_T E$$

- *Bending stress, σ_b.*

$$\sigma_b = \frac{M_L}{Z}$$

- *Torsional shear stress, τ_T.*

$$\tau_T = \frac{M_T}{2\pi R_n t_o}$$

Check Welds

- *Section modulus of weld, S_w.*

$$S_w = \pi R_n^2$$

- *Polar moment of inertia, J_w.*

$$J_w = 2\pi R_n^3$$

- *Shear stress in weld due to bending moment, f_s.*

$$f_s = \frac{M_L}{S_w}$$

- *Torsional shear stress in weld, τ_T.*

$$\tau_T = \frac{M_T R_n}{J_w}$$

- *Size of welds required, w_1 and w_2.*

$w_1 >$ thickness of end plate

$w_2 =$ width of combined groove and fillet welds

$$w_2 = \frac{f_s}{F_s} \qquad > \frac{3}{8}\text{in.}$$

Type 2: Trunnion and Rotating Lug

- *Net section at Section A-A, A_p.*

$$A_p = 2l_3 t_L + 2t_p(D_3 - D_1)$$

- *Shear stress at pin hole, τ.*

$$\tau = \frac{P_L}{A_p}$$

- *Net section at Section B-B, A_n.*

$$A_n = 2t_L(R_o - R_i)$$

- *Shear stress at trunnion, τ.*

$$\tau = \frac{P_L}{A_n}$$

- *Minimum bearing contact angle for lug at trunnion, θ_B.*

$$\theta_B = \frac{(15.9P_L)}{R_n t_L F_p}$$

- *Pin hole bearing stress, σ_p.*

$$\sigma_p = \frac{P_L}{D_3(t_L + 2t_p)}$$

Check Welds

- *Longitudinal moment, M_L (vessel vertical).*

$$M_L = P_L e$$

- *Section modulus of weld, S_w.*

$$S_w = \pi R_n^2$$

- *Shear stress in weld due to bending moment, f_s.*

$$f_s = \frac{M_L}{S_w}$$

- *Size of welds required, w_1 and w_2.*

w_1 > thickness of end plate

w_2 = width of combined groove and fillet welds

$$w_2 = \frac{f_s}{F_s} \qquad > \frac{3}{8} \text{ in.}$$

Type 3: Trunnion Only

Vessel Vertical

- *Longitudinal moment, M_L.*

$$M_L = P_L e$$

- *Bending stress in trunnion, σ_b.*

$$\sigma_b = \frac{M_L}{Z}$$

Vessel Horizontal

- *Circumferential moment, M_c.*

$$M_c = P_T e$$

- *Bending stress in trunnion, σ_b.*

$$\sigma_b = \frac{M_c}{Z}$$

Check Welds

- *Longitudinal moment, M_L (vessel vertical).*

$$M_L = P_L e$$

- *Section modulus of weld, S_w.*

$$S_w = \pi R_n^2$$

- *Shear stress in weld due to bending moment, f_s.*

$$f_s = \frac{M_L}{S_w}$$

- *Size of welds required, w_1 and w_2.*

w_1 > thickness of end plate

w_2 = width of combined groove and fillet welds

$$w_2 = \frac{f_s}{F_s} \qquad > \frac{3}{8} \text{ in.}$$

PROCEDURE 7-9

LOCAL LOADS IN SHELL DUE TO ERECTION FORCES

Trunnions

Fixed Lug Trunnion

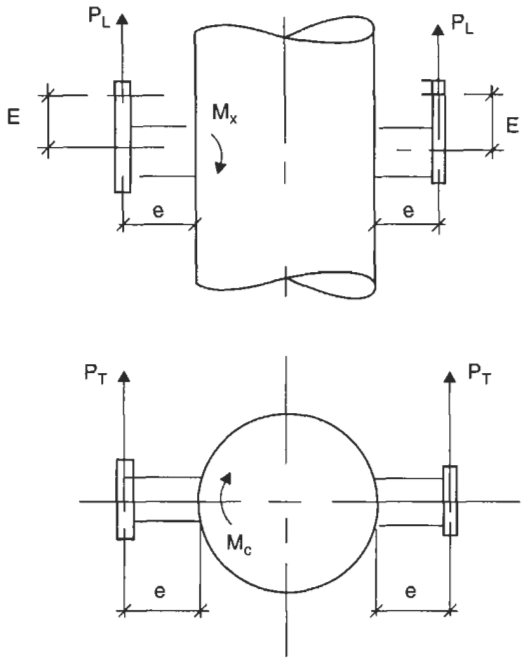

- *Maximum longitudinal moment, M_x.*

  $M_x = P_L e$

- *Maximum circumferential moment, M_c.*

  $M_c = P_T e$

- *Maximum torsional moment, M_T.*

  $M_T = P_T E$

- *Loads for any given lift angle, θ.*

  $P_L = 0.5P \sin \theta$
  $P_T = 0.5P \cos \theta$

Rotating Trunnion

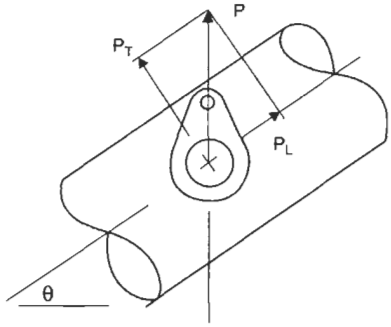

- *Maximum longitudinal moment, M_x.*

  $M_x = P_L e$

- *Maximum circumferential moment, M_c.*

  $M_c = P_T e$

- *Loads for any given lift angle, θ.*

  $P_L = 0.5P \sin \theta$
  $P_T = 0.5P \cos \theta$

Trunnion—No Lug

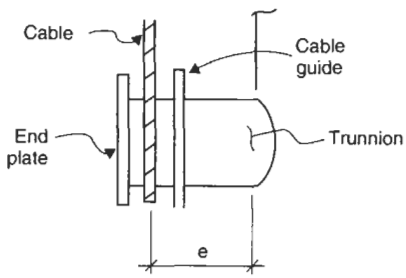

- *Maximum longitudinal moment, M_x.*

  $M_x = P_L e$

- *Maximum circumferential moment, M_c.*

  $M_c = P_T e$

- *Loads for any given lift angle, θ.*

  $P_L = 0.5P \sin \theta$
  $P_T = 0.5P \cos \theta$

Side Lugs

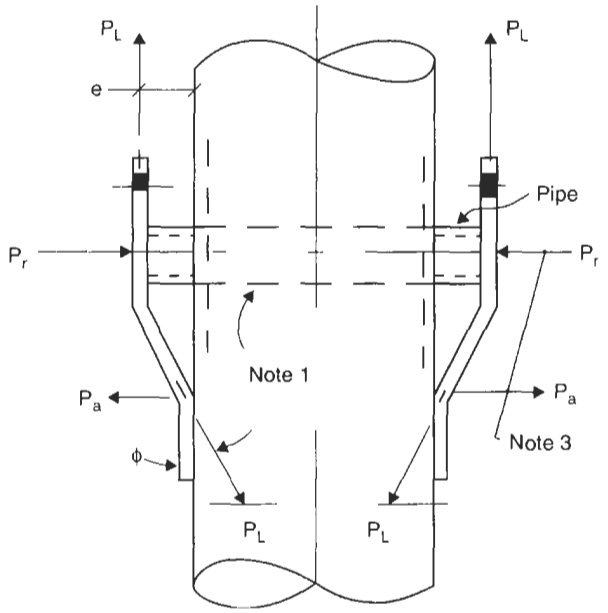

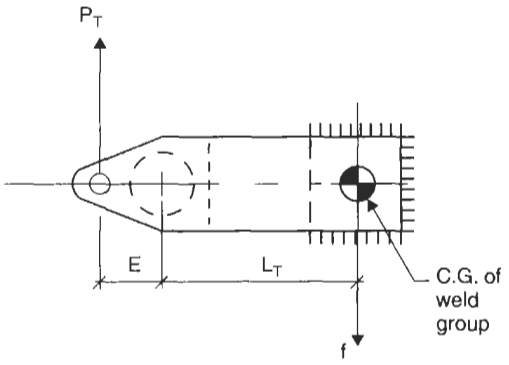

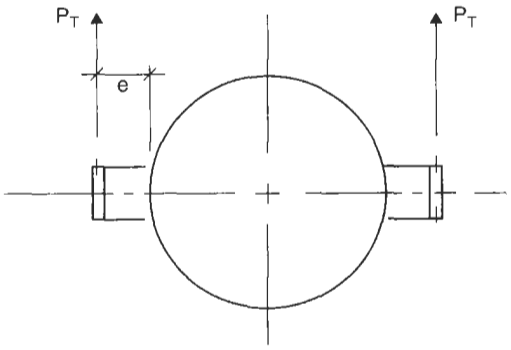

Notes:

1. Optional internal pipe. Remove after erection.
2. Radial load, P_r, is the axial load in the internal pipe stiffener if used in lieu of radial load in shell.
3. Circumferential ring stiffeners are optional at these elevations.

- *Circumferential moment, M_c.*

$$M_c = P_T e$$

- *Longitudinal moment, M_x.*

$$M_x = P_L e$$

- *Load on weld group, f.*

$$f = \frac{P_T E}{L_T}$$

- *Radial loads, P_r and P_a.*

$$P_r = P_L e$$
$$P_a = P_L \sin \phi$$

Top Flange Lug

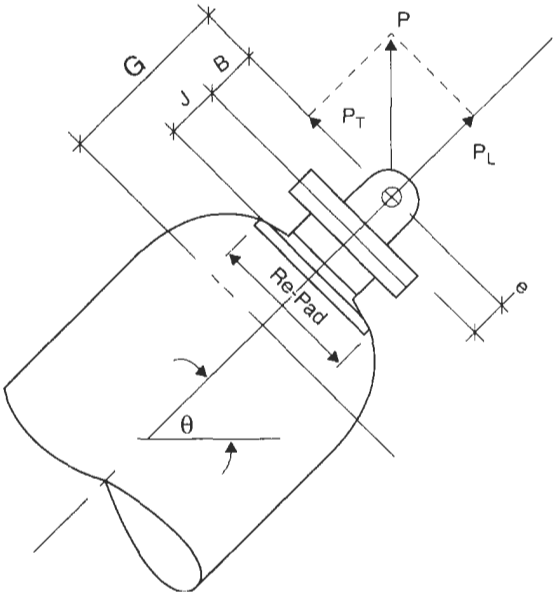

- *Loads, P_T and P_L.*

$$P_T = P \cos \theta$$
$$P_L = P \sin \theta$$

- *Moment on flange, M.*

$$M = P_T B$$

- *Moment on head, M.*

$$M = P_T(B + J)$$

- *Moment on vessel, M.*

$$M = P_T G$$

- *Radial load on head and nozzle* $= P_L$.

Side Flange Lug

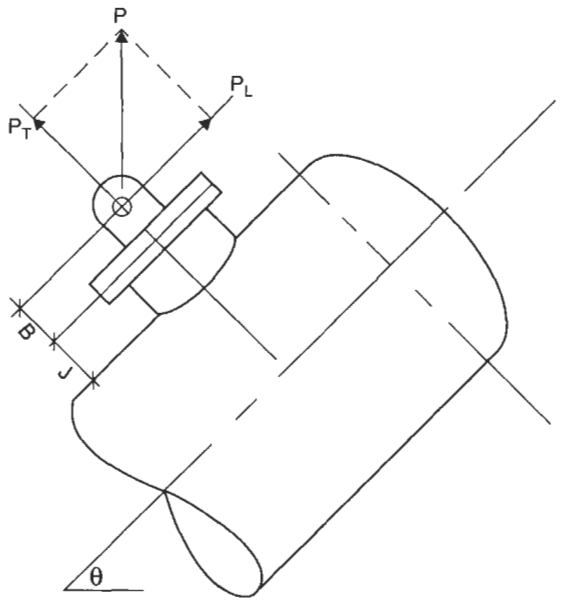

- *Loads,* P_T *and* P_L.

$$P_L = P \cos \theta$$
$$P_T = P \sin \theta$$

- *Moment on flange, M.*

$$M = P_L B$$

- *Longitudinal moment on shell,* M_x.

$$M = P_T(B + J)$$

- *Radial load on shell and nozzle* $= P_T$.

PROCEDURE 7-10

MISCELLANEOUS

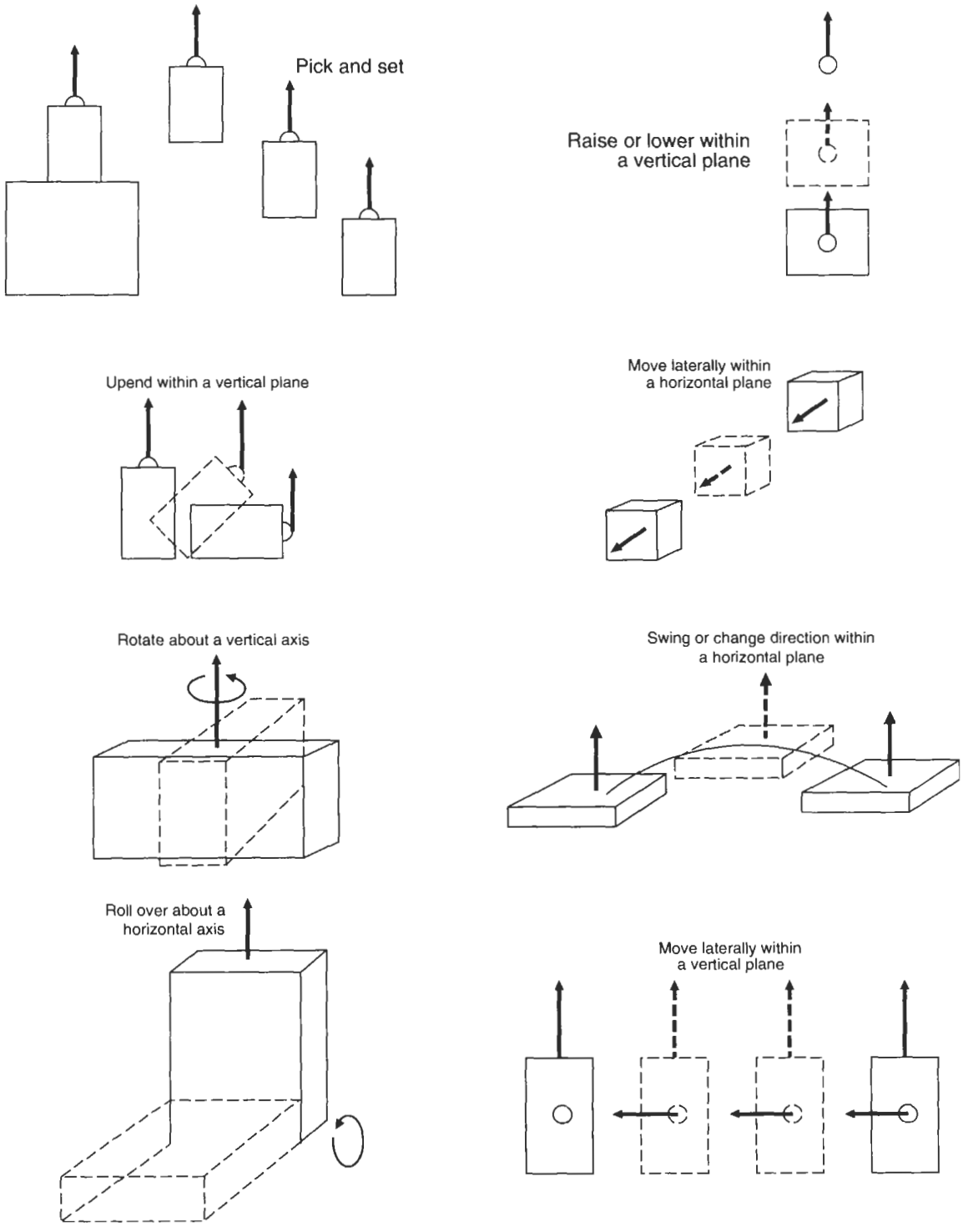

Figure 7-2. Fundamental handling operations. Reprinted by permission of the Babcock and Wicox Company, a McDermott Company.

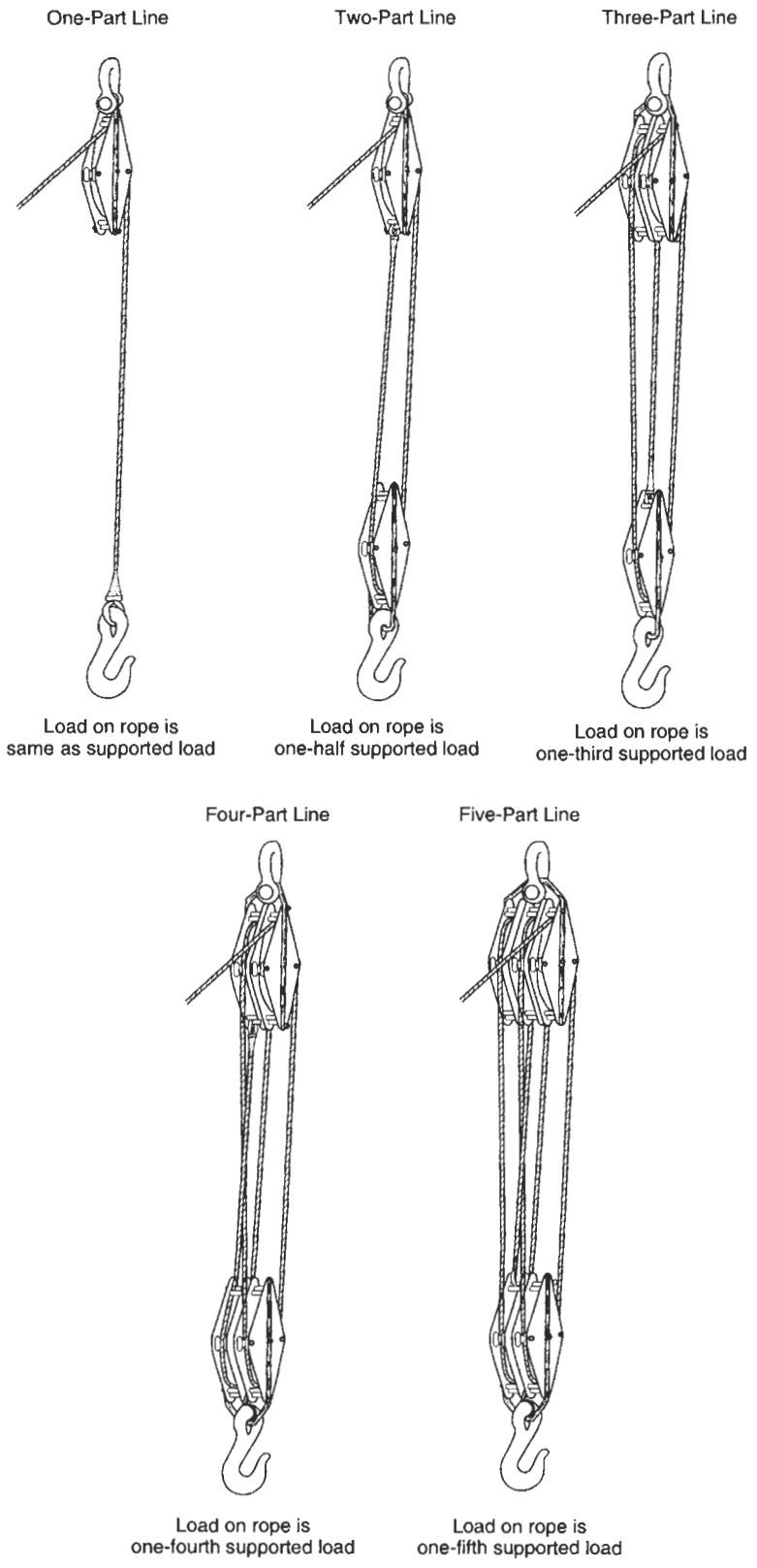

Figure 7-3. Loads on wire rope for various sheave configurations.

Table 7-12
Forged Steel Shackles

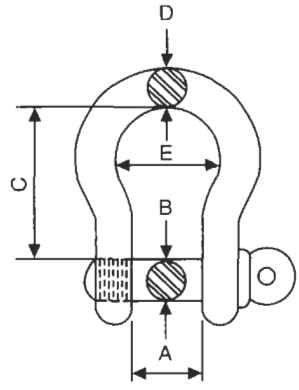

Anchor Shackle Screw Pin

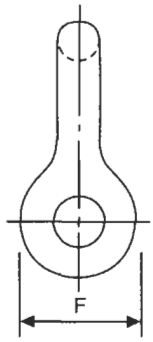

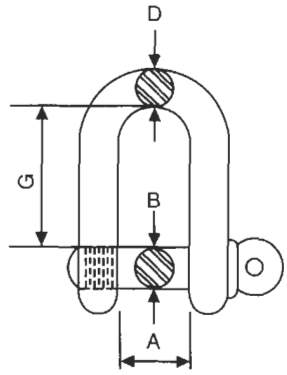

Chain Shackle Screw Pin

Dimensions in Inches											
Size D (in.)	**Safe Load (lb)**	**D (min)**	**A**	**Tolerance A Dim.**	**B**	**B (min)**	**C**	**G**	**Tolerance C and G Dim.**	**E**	**F**
1/4	475	7/32	15/32	±1/16	5/16	9/32	1 1/8	7/8	±1/16	3/4	11/16
3/8	1,050	11/32	21/32	±1/16	7/16	25/64	1 7/16	1 1/4	±1/8	1	31/32
7/16	1,450	25/64	23/32	±1/16	1/2	29/64	1 11/16	1 7/16	±1/8	1 1/8	1 1/16
1/2	1,900	29/64	13/16	±1/16	5/8	9/16	1 7/8	1 5/8	±1/8	1 3/8	1 5/16
5/8	2,950	9/16	1 1/16	±1/16	3/4	43/64	2 13/32	2	±1/8	1 5/8	1 9/16
3/4	4,250	43/64	1 1/4	±1/16	7/8	25/32	2 27/32	2 3/8	±1/4	2	1 7/8
7/8	5,750	25/32	1 7/16	±1/16	1	57/64	3 5/16	2 13/16	±1/4	2 1/4	2 1/8
1	7,550	57/64	1 11/16	±1/16	1 1/8	1 1/32	3 3/4	3 3/16	±1/4	2 1/2	2 3/8
1 1/8	8,900	1 1/32	1 27/32	±1/8	1 1/4	1 7/64	4 1/4	3 9/16	±1/4	2 3/4	2 5/8
1 1/4	11,000	1 7/64	2 1/32	±1/8	1 3/8	1 15/64	4 11/16	3 15/16	±1/4	3 1/8	3
1 3/8	13,300	1 15/64	2 1/4	±1/8	1 1/2	1 11/32	5 1/4	4 7/16	±1/4	3 1/2	3 5/16
1 1/2	15,600	1 11/32	2 3/8	±1/8	1 5/8	1 29/64	5 3/4	4 7/8	±1/4	3 3/4	3 5/8
1 3/4	21,500	1 35/64	2 7/8	±1/8	2	1 25/32	7	5 3/4	±1/4	4 1/4	4 1/8
2	28,100	1 25/32	3 1/4	±1/8	2 1/4	2 1/64	7 3/4	6 3/4	±1/4	5 1/4	5
2 1/4	36,000	2 1/64	3 3/4	±1/8	2 1/2	2 15/64	9 1/4	7 1/8	±3/4	5 1/2	5 1/4
2 1/2	45,100	2 15/64	4 1/8	±1/8	2 3/4	2 15/32	10 1/2	8	±3/4	6 1/4	6
3	64,700	2 11/16	5	±1/8	3 1/4	2 29/32	13	11 1/2	±3/4	6 3/4	6 1/2

Notes:
For shackles with safe loads greater than the maximum shown, use Crosby–Laughlin (The Crosby Group, Div. of American Hoist & Derrick Co, Tulsa, OK 74101), Skookum (Skookum Co., Inc., Portland, OR 97203), or equal with an ultimate strength at least 5 times the safe working load.

Allowable loads are lower than OSHA requirements tabulated in Section 1926.251, Table H–19.

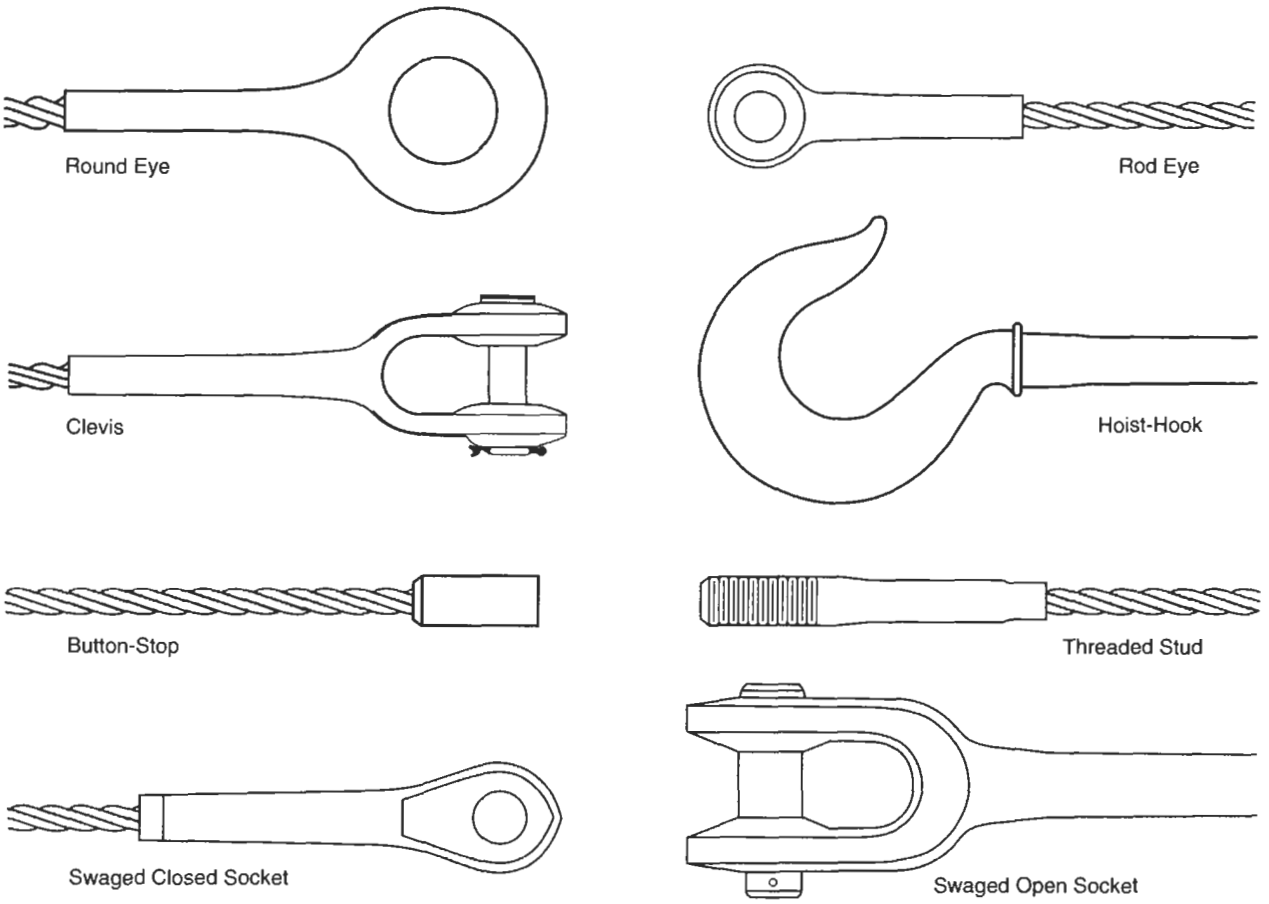
Round Eye
Rod Eye
Clevis
Hoist-Hook
Button-Stop
Threaded Stud
Swaged Closed Socket
Swaged Open Socket

Figure 7-4.

Table 7-12
Material Transportation and Lifting

Material-Handling System	Description	Capacity t (t_m)
Site Transport:		
Flatbed trailers	Bed dimension 8 × 40 ft *(2.4 × 12.2 m)*—deck height 60 in. *(1524 mm)* used to transport materials from storage to staging area.	20 *(18)*
Extendable trailers	Bed dimension up to 8 × 60 ft *(2.4 × 18.3 m)*—deck height 60 in. *(1524 mm)* used to transport materials from storage to staging area.	15 *(14)*
Lowboy and dropdeck	Bed dimension up to 8 × 40 ft *(2.4 × 12.2 m)*—deck height of 24 in. *(610 mm)* used to transport materials from storage to staging area.	60 *(54)*
Crawler transporter	Specially designed mechanism for handling heavy loads; Lampson crawler transporter, for an example of the Lampson design.	700 *(635)*
Straddle carrier	Mobile design to transport structural steel, piping, and other assorted items; straddle carrier, for an example of this design.	30 *(27)*
Rail	Track utilized to transport materials to installed location. Continuous track allows material installation directly from delivery car.	as designed
Roller and track	Steel machinery rollers located relative to component center of gravity handle the load. Rollers traverse the web of a channel welded to top flange of structural member below.	2000 *(1814)*
Plate and slide	Sliding steel plates. Coefficient of friction—0.4 steel on steel, 0.09 greased steel on steel, 0.04 Teflon on steel. Sliding plate transport for movement of 1200 t *(1089 t_m)* vessel.	as designed
Air bearings or air pallets	Utilizes film of air between flexible diaphragm and flat horizontal surface. Air flow 3 to 200 ft^3/min *(0.001 to 0.09 m^3/s)*. 1 lb *(4.5 N)* lateral force per 1000 lb *(454 kg)* vertical load.	75 *(68)*
High line	Taut cable guideway anchored between two points and fitted with inverted sheave and hook.	5 *(4.5)*
Lifting:		
Chain hoist	Chain operated geared hoist for manual load handling capability. Standard lift heights 8 to 12 ft *(2.4 to 3.7 m)*.	25 *(23)*
Hydraulic rough terrain cranes	Telescopic boom mounted on rubber tired self-propelled carrier.	90 *(82)*
Hydraulic truck cranes	Telescopic boom mounted on rubber tired independent carrier.	450 *(408)*
Lattice boom truck cranes	Lattice boom mounted on rubber tired independent carrier.	800 *(726)*
Lattice boom crawler cranes	Lattice boom mounted on self-propelled crawlers.	2200 *(1996)*
Fixed position crawler cranes	Lattice boom mounted on self-propelled crawlers and equipped with specifically designed attachments and counterweights.	750 *(680)*
Tower gantry cranes	Tower mounted lattice boom gantry for operation above work site.	230 *(209)*
Guy derrick	Boom mounted to a mast supported by wire rope guys. Attached to existing building steel with load lines operated from independent hoist. Swing angle 360 deg *(6.28 rad)*.	600 *(544)*
Chicago boom	Boom mounted to existing structure which acts as mast, and to which is attached boom topping lift and pivoting boom support bracket. Load lines operated from independent hoist. Swing angle from 180 to 270 deg *(3.14 to 4.71 rad)*.	function of support structure
Stiff leg derrick	Boom attached to mast supported by two rigid diagonal legs and horizontal sills. Horizontal angle between each leg and sill combination ranges from 60 to 90 deg *(1.05 to 1.57 rad)*; swing angle from 270 to 300 deg *(4.71 to 5.24 rad)*.	700 *(635)*
Monorail	High capacity load blocks suspended from trolleys which traverse monorail beams suspended from boiler support steel. Provides capability to lift and move loads within boiler cavity.	400 *(363)*
Jacking systems	Custom designed hydraulic or mechanical system for high capacity special lifts.	as specified

Reprinted by permission of the Babcock and Wicox Company, a McDermott Company.

Notes

1. This procedure is for the design of the vessel and the lifting attachments only. It is not intended to define rigging or crane requirements.
2. Lifting attachments may remain on the vessel after erection unless there is some process- or interference-related issue that would necessitate their removal.
3. Load and impact factors must be used for moving loads. It is recommended that a 25% impact factor and a minimum load factor of 1.5 be used. The combined load and impact factor should be 1.5–2.0.
4. Allowable stress compression should be $0.6F_y$ for structural attachments and ASME Factor "B" times 1.33 for the vessel shell.
5. Vessel shipping orientation should be established such that a line through the lifting lugs is parallel to grade if possible. This prevents the vessel from having to be "rolled" to the correct orientation for loading and offloading operations.
6. If a spreader beam is not used, the minimum sling angle shall be 30° from the horizontal position. At 30°, the tension in each sling is equal to the total design load. Thus a load factor of 2 is mandatory for these cases. This requires that each lug be designed for the full load.
7. Vessels should never be lifted by a nozzle or other small attachments unless specifically designed to do so.
8. All local loads in vessel shell or head resulting from loadings imposed during erection of the vessel shall be analyzed using a suitable local load procedure.
9. Tailing attachment shall be designed such that they may be unbolted without having to get under the load while it is suspended. As an alternative, the vessel must be set down at grade before a person can get under the base ring to unbolt the tailing beam. Be advised that the base and skirt may not be designed for point support if cribbing is used to build up the base for access.
10. A tailing lug, as opposed to a tailing beam, allows the load to be disconnected from the vessel without a person's getting under a suspended load to unhook.
11. This procedure assumes that the pin diameter is no less than $\frac{1}{16}$ in. less than the hole diameter. If the pin diameter is greater than $\frac{1}{16}$ in. smaller than the hole diameter, then the bearing stresses in the lug at the contact point are increased dramatically due to the stress concentration effect.
12. Internal struts in the skirt or base plate are required only if the base/skirt configuration is overstressed.
13. If bearing or shear stresses are exceeded in the lug, add pad eyes.
14. Trunnions may be used as tailing devices as long as the resulting local loads in the skirt are analyzed.
15. Do not use less than Schedule 40 pipe for trunnions.
16. Specific notes for trunnions:

    a. Type 1, fixed lug: Normal use but generally for small to medium vessels (less than 100 tons).
    b. Type 2, rotating lug: Best use is when multiple vessels are to be lifted with the same lug. The lug may be removed by removing the end plate and sliding the lug off. Then the lug is reinstalled on the next vessel. For heavier loads, an internal sleeve should be attached to the lug to increase the bearing area on the trunnion.
    c. Type 3, trunnion only: No size limitation or weight limitation. The cable and trunnions should be lubricated prior to lifting to prevent the cables from binding. The bend radius of the cables may govern the diameter of the trunnion. Check with erection contractor.

Appendices

APPENDIX A

GUIDE TO ASME SECTION VIII, DIVISION 1

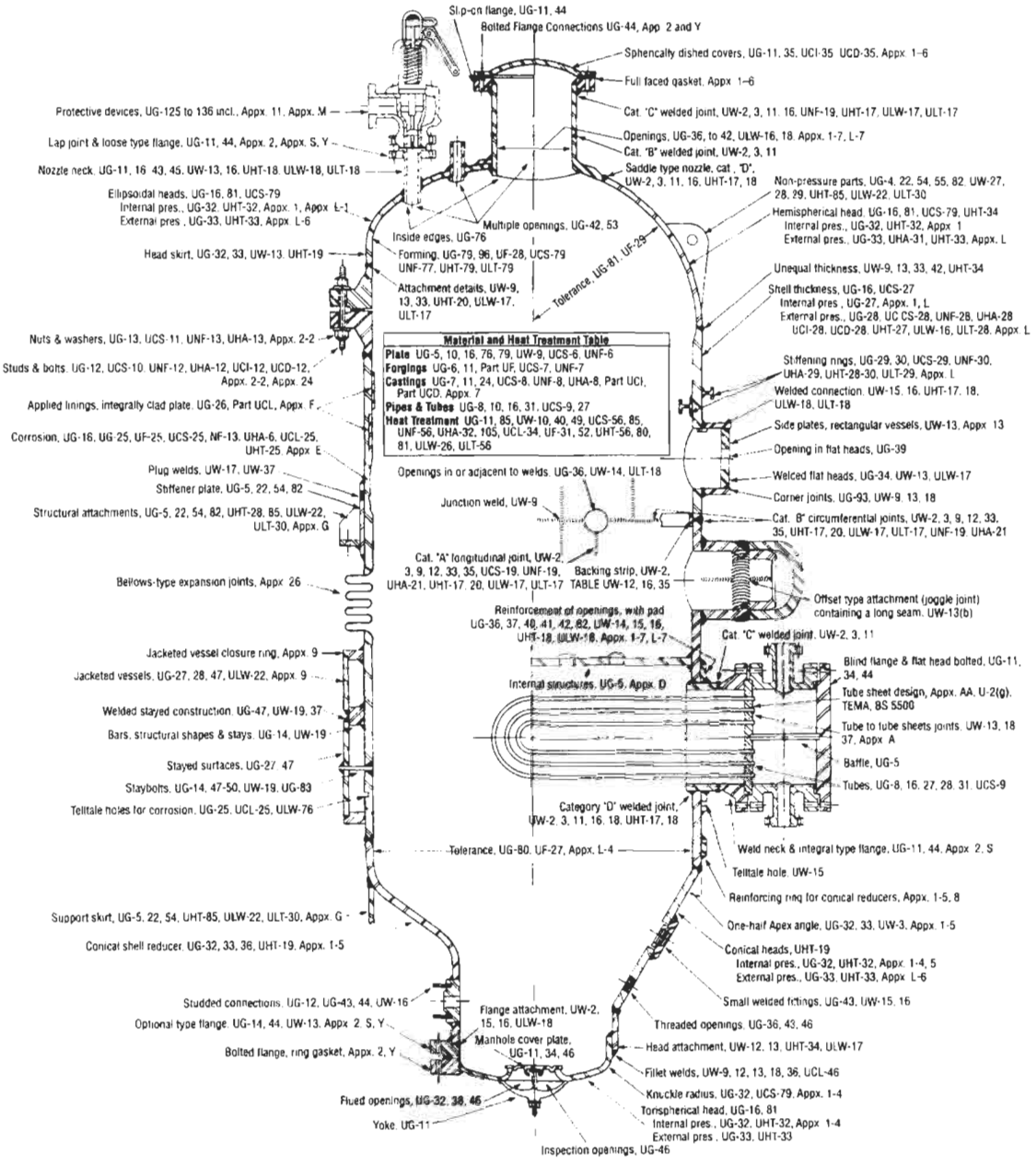

Figure continued on next page

Organization of Section VIII, Div. 1

Introduction—Scope and Applicability
Subsection A—part UG—General requirements for all construction and all materials.
Subsection B—Requirements for method of fabrication
- Part UW—Welding
- Part UF—Forging
- Part UB—Brazing

Subsection C—Requirements for classes of material.
- Part UCS—Carbon and low alloy steels
- Part UNF—Nonferrous materials
- Part UHA—High alloy steels
- Part UCI—Cast iron
- Part UCL—Clad plate and corrosion resistant liners
- Part UCD—Cast ductile iron
- Part UHT—Ferritic steels with tensile properties enhanced by heat treatment
- Part ULW—Layered construction
- Part ULT—Low Temperature Materials

Mandatory appendices—1through 29
Nonmandatory appendices—A through Y, AA, CC, DD, EE

Quality Control System	U-2, Appx. 10
Material—General	UG-4, 10, 11, 15, Appx. B
(a) Plate	UG-5
(b) Forgings	UG-6
(c) Castings	UG-7
(d) Pipe & Tubes	UG-8
(e) Welding	UG-9
(f) Bolts & Studs	UG-12
(g) Nuts &Washes	UG-13
(h) Rods & Bars	UG-14
(i) Standard Parts	UG-11, 44
Design Temperature	UG-20
Design Pressure	UG-21, UG-98
Loadings	UG-22, Appx. G
Stress—Max. Allowable	UG-23
Manufacturer's Responsibility	U-2, UG-90
Inspector's Responsibility	U-2, UG-90
User's Responsibility	U-2

General Notes

Pressure Tests	UG-99, 100, 101, UW-50, UCI-99, UCD-99
Low Temperature Service	UW-2, Part ULT
Quick Actuating Closures	U-1, UG-35, ULT-2
Service Restrictions	UW-2, UB-3, UCL-3, UCD-2
Nameplates. Stamping & Reports	UG-115 to 120 UHT-115, ULW-115, ULT-115, Appx. W
Non-Destructive Examination	
(a) Radiography	UW-51, 52
(b) Ultrasonic	Appx. 12
(c) Magnetic Particle	Appx. 6
(d) Liquid Penetrant	Appx. 8
Porosity Charts	Appx. 4
Code Jurisdiction Over Piping	U-1
Material Tolerances	UG-16
Material Identification, Marking and Certification	UG-77, 93, 94
Dimpled or Embossed Assemblies	Appx. 17

Courtesy of Hartford Steam Boiler Inspection and Insurance Company

APPENDIX B

DESIGN DATA SHEET FOR VESSELS

1 Customer/Client					
2 Customer Order No.					
3 Shop Order No.					
4 Design Drawing					
5 Specifications					
6 Vessel Name					
7 Equipment/Item Number					
8 Design Code & Addenda					
9 Design Pressure & Temperature	Internal		External		
10 Operating Pressure & Temperature					
11 Vessel Diameter					
12 Volume					
13 Design Liquid Level					
14 Contents & Specific Gravity					
15 Service					
16 MAWP (Corrosion at Design Temperature)			Limited by		
17 MAP (N & C)					
18 Test pressures	Shop		Field		
19 Heat treatment					
20 Joint efficiencies	Shell				
	Heads				
21 Corrosion allowance	Shell		22 Flange ratings		
	Heads		MAP:	psig at Ambient	
	Nozzles		MAWP:	psig at D.T.	
	Boot		Hydro:	psig	
23 Materials		24 Allowable Stress	Ambient	D.T.	
Shell					
Heads					
Nozzles					
Flanges					
Bolting					
Supports					
25 Weights	Fabricated	Operating			
	Empty	Test			
26 Notes/remarks					

APPENDIX C

JOINT EFFICIENCIES (ASME CODE) [3]

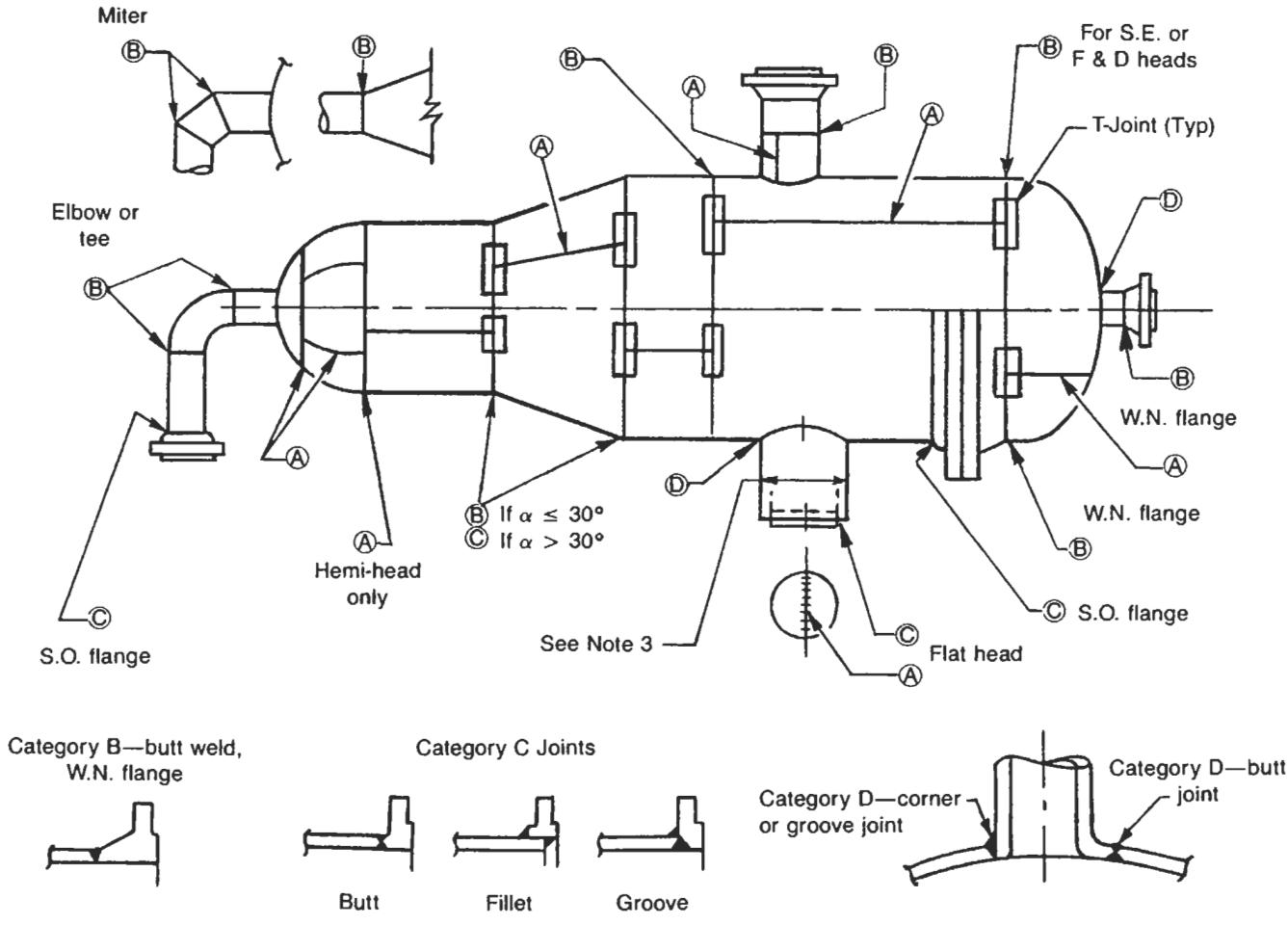

Figure C-1. Categories of welded joints in a pressure vessel.

Table C-1
Types of Joints and Joint Efficiencies

	Types of Joints		Full	X-Ray Spot	None		Types of Joints		Full	X-Ray Spot	None
1		Single- and double-butt joints	1.0	0.85	0.7	4		Double full fillet lap joint	—	—	0.55
2		Single-butt joint with backing strip	0.9	0.8	0.65	5		Single full fillet lap with plugs	—	—	0.5
3		Single butt joint without backing strip	—	—	0.6	6		Single full fillet lap joint	—	—	0.45

Table C-2
Application of Joint Efficiencies

Extent of Radiography		Case 1 Seamless Head Seamless Shell		Case 2 Seamless Head Welded Shell		Case 3 Welded Head Seamless Shell		Case 4 Welded Head Welded Shell	
		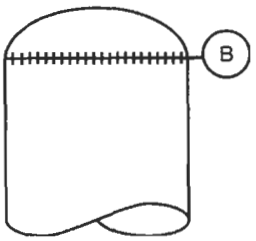		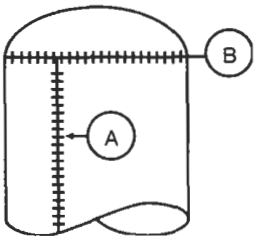		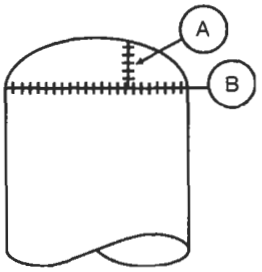		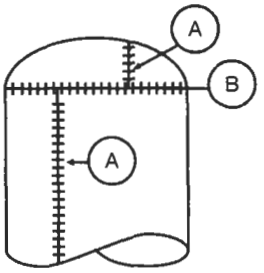	
		Head	Shell	Head	Shell	Head	Shell	Head	Shell
Full	Cat. A and B	1.0	1.0	1.0	1.0	1.0	1.0	1.0	1.0
Spot	Cat. A only	0.85	0.85	0.85	0.85	0.85	0.85	0.85	0.85
	(4)	1.0	1.0	1.0	0.85	0.85	1.0	—	—
Part	(2)	1.0	1.0	1.0	1.0	1.0	1.0	1.0	1.0
None	Cat. A and B	0.85	0.85	0.85	0.7	0.7	0.85	0.7	0.7

Notes

1. In Table C-2 joint efficiencies and allowable stresses for shells are for longitudinal seams only and all joints are assumed as Type 1 only.
2. *"Part" radiography*: Applies to vessels *not* fully radiographed where the designer wishes to apply a joint efficiency of 1.0 per ASME Code, Table UW-12, for only a specific part of a vessel. Specifically for any part to meet this requirement, you must perform the following:
   - *(ASME Code, Section UW(5))*: Fully X-ray any Category A or D *butt* welds.
   - *(ASME Code, Section UW-11(5)(b))*: Spot x-ray any Category B or C *butt* welds attaching the part.
   - *(ASME Code, Section UW-11(5)(a))*: All butt joints must be Type 1 or 2.
3. Any Category B or C butt weld in a nozzle or communicating chamber of a vessel or vessel part which is to have a joint efficiency of 1.0 and exceeds either 10-in. nominal pipe size or $1\frac{1}{8}$ in. in wall thickness shall be fully radiographed. See ASME Code, Sections UW-11(a)(4).
4. In order to have a joint efficiency of 1.0 for a seamless part, the Category B seam attaching the part must, as a minimum, be spot examined.

APPENDIX D

PROPERTIES OF HEADS

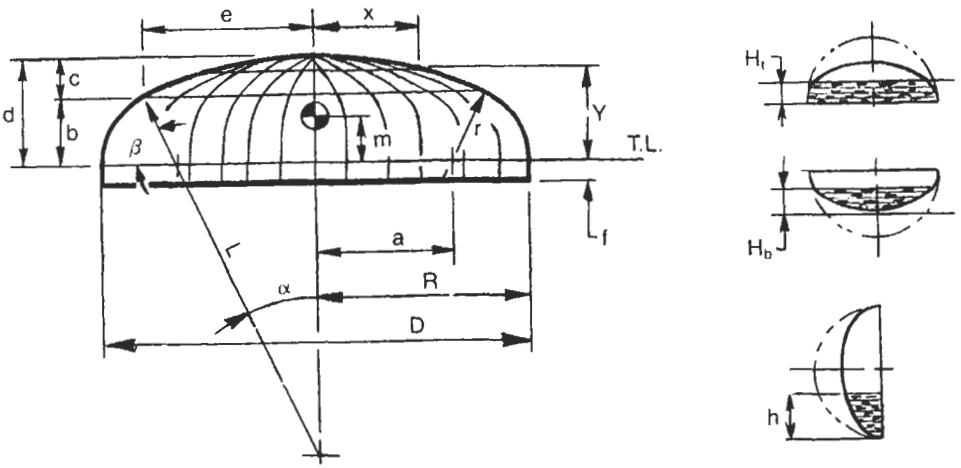

Figure D-1. Dimensions of heads.

Formulas

$$a = \frac{D - 2r}{2}$$

$$\alpha = \arcsin\left(\frac{a}{L - r}\right)$$

$$\beta = 90 - \alpha$$

$$b = \cos\alpha\, r$$

$$c = L - \cos\alpha\, L$$

$$e = \sin\alpha\, L$$

$$\phi = \frac{\beta}{2}$$

Volume

$$V_1 = (\text{frustum}) = 0.333b\pi(e^2 + ea + a^2)$$

$$V_2 = (\text{spherical segment}) = \pi c^2\left(L - \frac{c}{3}\right)$$

$$V_3 = (\text{solid of revolution}) = \frac{120r^3\pi \sin\phi \cos\phi + a\phi\pi^2 r^2}{90}$$

TOTAL VOLUME: $V = V_1 + V_2 + V_3$

Depth of Head

$$A = L - r$$

$$B = R - r$$

$$d = L - \sqrt{A^2 - B^2}$$

Table D-1
Partial Volumes

TYPE	Volume to H_t	Volume to H_b	Volume to h
HEMI	$\frac{\pi D^2 H_t}{4}\left[1 - \frac{4H_t^2}{3D^2}\right]$	$\frac{\pi D H_b^2}{2}\left[1 - \frac{2H_b}{3D}\right]$	$\frac{\pi h^2(1.5D - h)}{6}$
2:1 S.E.	$\frac{\pi D^2 H_t}{4}\left[1 - \frac{16H_t^2}{3D^2}\right]$	$\pi D H_b^2\left[1 - \frac{4H_b}{3D}\right]$	$\frac{\pi h^2(1.5D - h)}{12}$
100%–6% F & D	$\frac{3VH_t}{2d}\left[1 - \frac{H_t^2}{3d^2}\right]$	$\frac{3VH_b^2}{2d^2}\left[1 - \frac{H_b}{3d}\right]$	$\frac{3Vh^2}{D^2}\left[1 - \frac{2h}{3D}\right]$

Table D-2
General Data

			C.G.-m			Points on heads	
Type	Surf. Area	Volume	Empty	Full	Depth of head-d	X =	Y =
HEMI	$\pi D^2/2$	$\pi D^3/12$	0.2878D	0.375D	0.5D	$\sqrt{R^2 - Y^2}$	$\sqrt{R^2 - X^2}$
2:1 S.E.	$1.084D^2$	$\pi D^3/24$	0.1439D	0.1875D	0.25D	$0.5\sqrt{D^2 - 16Y^2}$	$0.25\sqrt{D^2 - 4X^2}$
100%–6% F & D	$0.9286D^2$	$0.0847D^3$	0.100D		0.162D		

APPENDIX E

VOLUMES AND SURFACE AREAS OF VESSEL SECTIONS

Notation

ℓ = height of cone, depth of head, or length of cylinder
α = one-half apex angle of cone
D = large diameter of cone, diameter of head or cylinder
R = radius
r = knuckle radius of F & D head
L = crown radius of F & D head
h = partial depth of horizontal cylinder
K, C = coefficients
d = small diameter of truncated cone
V = volume

$$K = \frac{L}{R} - \sqrt{\left(\frac{L}{R} - 1\right)\left(\frac{L}{R} + 1 - \frac{2r}{R}\right)}$$

$$e = \sqrt{1 - \frac{\ell^2}{R^2}}$$

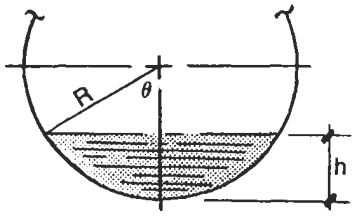

$$\theta = \arccos\frac{R - h}{R}$$

$$V = R^2\ell\left[\left(\frac{\pi\theta^\circ}{180}\right) - \sin\theta\cos\theta\right]$$

or

$V = \pi R^2 \ell c$ (See Table E-3 for values of c.)

Figure E-1. Formulas for partial volumes of a horizontal cylinder.

Table E-1
Volumes and Surface Areas of Vessel Sections

Section	Volume	Surface Area
Sphere	$\frac{\pi D^3}{6}$	πD^2
Hemi-head	$\frac{\pi D^3}{12}$	$\frac{\pi D^2}{2}$
2:1 S.E. head	$\frac{\pi D^3}{24}$	$1.084D^2$
Ellipsoidal head	$\frac{\pi D^2 \ell}{6}$	$2\pi R^2 + \frac{\pi \ell^2}{e}\ln\frac{1+e}{1-e}$
100–60% F & D head	$0.08467D^3$	$0.9286D^2$
F & D head	$\frac{2\pi R^3 K}{3}$	$\pi R^2\left[1 + \frac{\ell^2}{R^2}\left(2 - \frac{\ell}{R}\right)\right]$
Cone	$\frac{\pi D^2 \ell}{12}$	$\frac{\pi D \ell}{2\cos\alpha}$
Truncated cone	$\frac{\pi\ell(D^2 + Dd + d^2)}{12}$	$\pi\left(\frac{D+d}{2}\right)\sqrt{\ell^2 + \left(\frac{D-d}{2}\right)^2}$
30° Truncated cone	$0.227(D^3 - d^3)$	$1.57(D^2 - d^2)$
Cylinder	$\frac{\pi D^2 \ell}{4}$	$\pi D \ell$

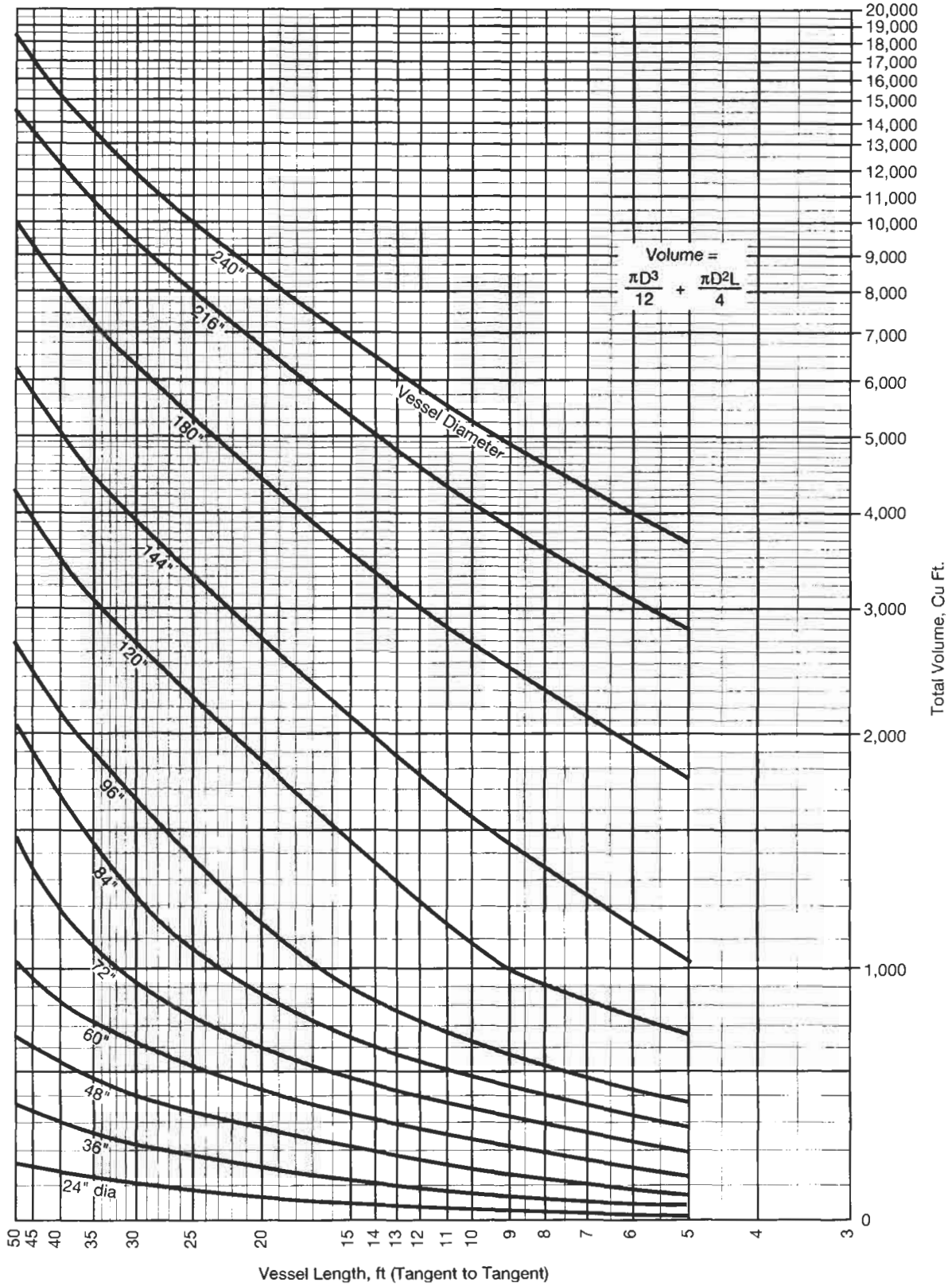

Figure E-2. Volume of vessels (includes shell plus (2) 2:1 S.E. Heads).

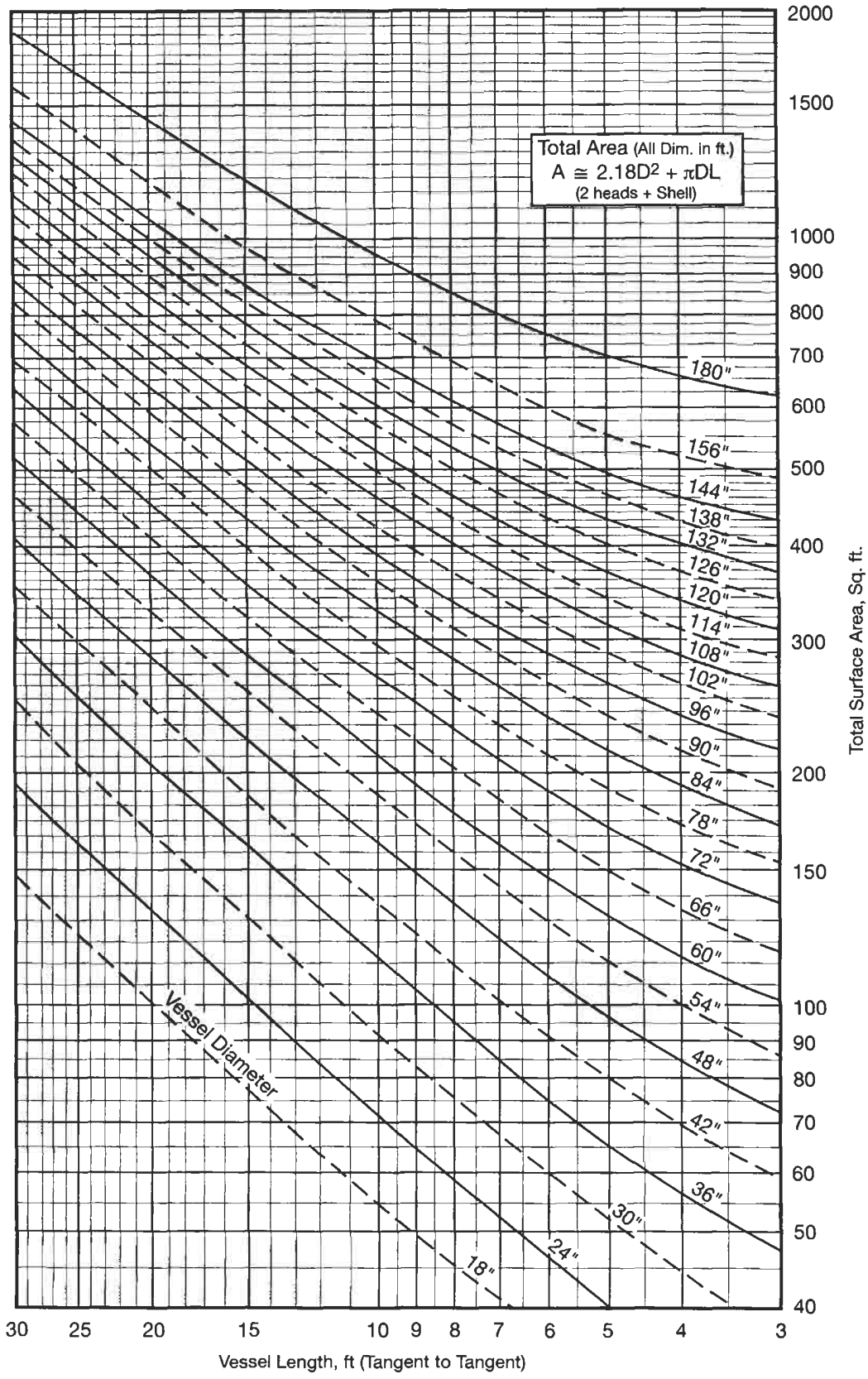

Figure E-3. Surface area of vessels (includes shell plus (2) 2:1 S.E. Heads).

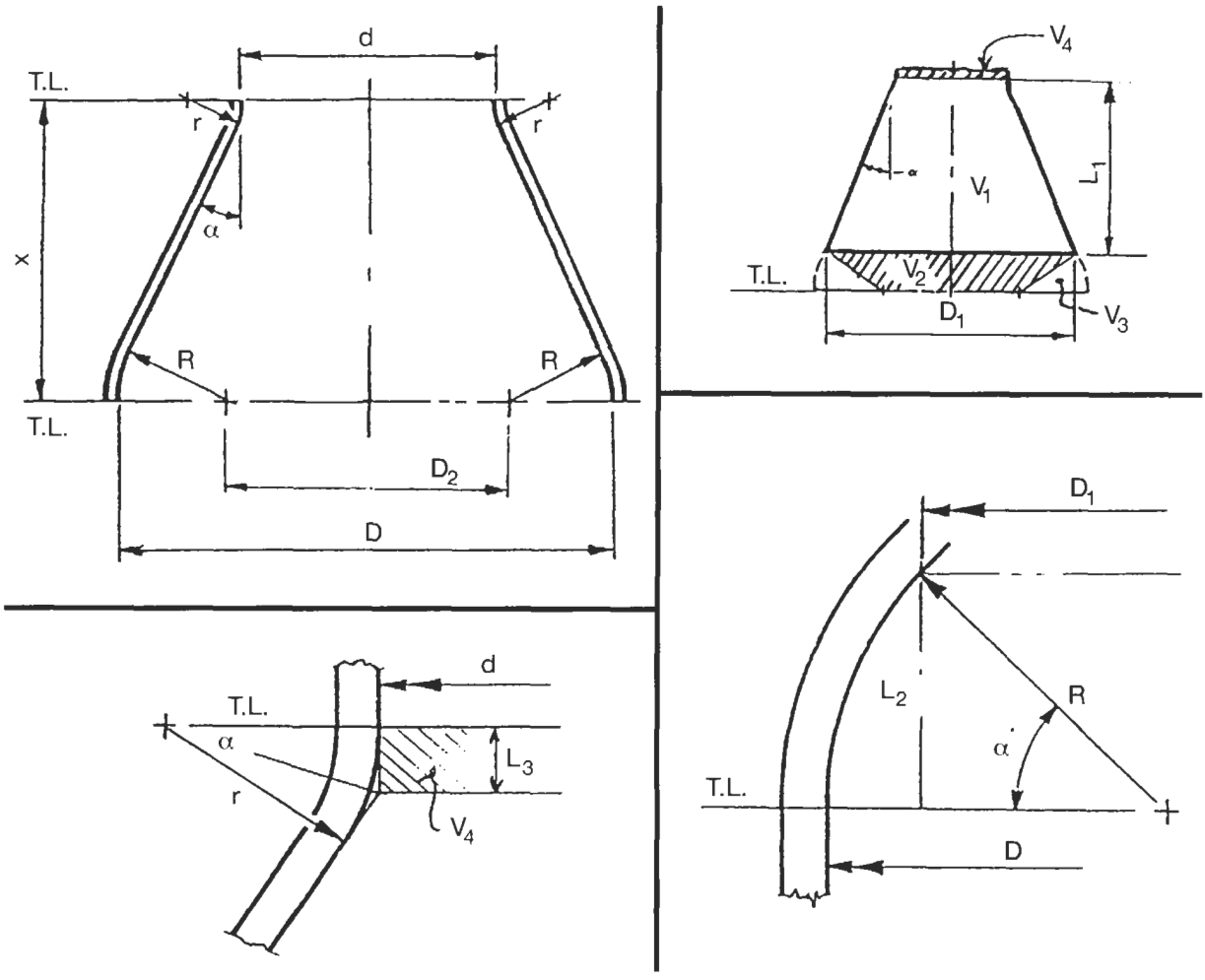

Figure E-4. Volume of a Toriconical Transition

Dimensions

$D =$
$d =$
$R =$
$r =$
$x =$
$\alpha =$

$L_2 = \sin\alpha\, R =$
$L_3 = \tan\dfrac{\alpha}{2}\,(r) =$
$L_1 = x - L_2 - L_3 =$
$D_1 = D - 2(R - R\cos\alpha) =$
$D_2 = D - 2R =$

Volumes

$$V_1 = \frac{\pi L_1(D_1^2 + D_1 d + d^2)}{12} =$$

$$V_2 = \frac{\pi L_2(D_1^2 + D_1 D_2 + D_2^2)}{12} =$$

$$V_3 = \frac{120R^3\pi\sin(\alpha/2)\cos(\alpha/2) + .25D_2R^2(\alpha/2)}{90} =$$

$$V_4 = \frac{\pi d^2 L_3}{4} =$$

$$\sum V = V_1 + V_2 + V_3 + V_4 =$$

Partial Volumes of Horizontal Vessels

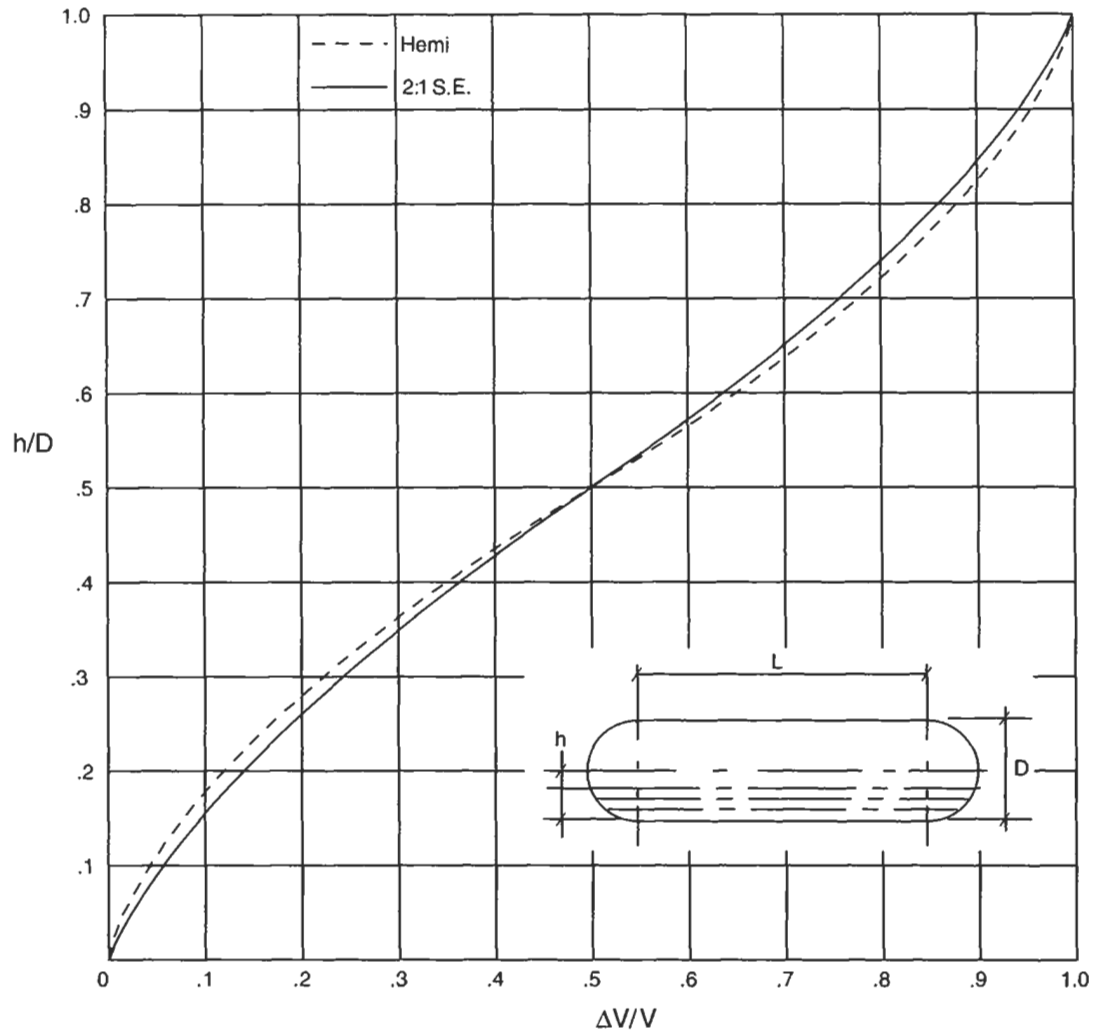

Figure E-5. Partial volumes of horizontal vessels.

Table E-2
Formulas for Full and Partial Volumes

	Full Volume, V	Partial Volume, ΔV
Cylinder	$\frac{\pi D^2 L}{4}$	$\frac{\pi D^2 LC}{4}$
(2) Hemi-heads	$\frac{\pi D^3}{6}$	$\frac{\pi h^2(1.5D - h)}{6}$
(2) 2:1 S.E. Heads	$\frac{\pi D^3}{12}$	$\frac{\pi h^2(1.5D - h)}{3}$

Table E-3
Partial Volumes in Horizontal Cylinders

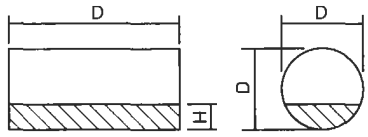

Partial volume in height (H) = cylindrical coefficient for H/D × total volume

$$\text{Total volume} = \frac{\pi LD^2}{4}$$

COEFFICIENTS FOR PARTIAL VOLUMES OF HORIZONTAL CYLINDERS, C

H/D	0	1	2	3	4	5	6	7	8	9
0.00	0.000000	0.000053	0.000151	0.000279	0.000429	0.000600	0.000788	0.000992	0.001212	0.001445
0.01	0.001692	0.001952	0.002223	0.002507	0.002800	0.003104	0.003419	0.003743	0.004077	0.004421
0.02	0.004773	0.005134	0.005503	0.005881	0.006267	0.006660	0.007061	0.007470	0.007886	0.008310
0.03	0.008742	0.009179	0.009625	0.010076	0.010534	0.010999	0.011470	0.011947	0.012432	0.012920
0.04	0.013417	0.013919	0.014427	0.014940	0.015459	0.015985	0.016515	0.017052	0.017593	0.018141
0.05	0.018692	0.019250	0.019813	0.020382	0.020955	0.021533	0.022115	0.022703	0.023296	0.023894
0.06	0.024496	0.025103	0.025715	0.026331	0.026952	0.027578	0.028208	0.028842	0.029481	0.030124
0.07	0.030772	0.031424	0.032081	0.032740	0.033405	0.034073	0.034747	0.035423	0.036104	0.036789
0.08	0.37478	0.038171	0.038867	0.039569	0.040273	0.040981	0.041694	0.042410	0.043129	0.043852
0.09	0.044579	0.045310	0.046043	0.046782	0.047523	0.048268	0.049017	0.049768	0.050524	0.051283
0.10	0.052044	0.052810	0.053579	0.054351	0.055126	0.055905	0.56688	0.057474	0.058262	0.059054
0.11	0.059850	0.060648	0.061449	0.062253	0.063062	0.063872	0.064687	0.065503	0.066323	0.067147
0.12	0.067972	0.068802	0.069633	0.070469	0.071307	0.072147	0.72991	0.073836	0.074686	0.075539
0.13	0.076393	0.077251	0.078112	0.078975	0.079841	0.080709	0.081581	0.082456	0.083332	0.084212
0.14	0.085094	0.085979	0.086866	0.087756	0.088650	0.089545	0.090443	0.091343	0.092246	0.093153
0.15	0.094061	0.094971	0.095884	0.096799	0.097717	0.098638	0.099560	0.100486	0.101414	0.102343
0.16	0.103275	0.104211	0.105147	0.106087	0.107029	0.107973	0.108920	0.109869	0.110820	0.111773
0.17	0.112728	0.113686	0.114646	0.115607	0.116572	0.117538	0.118506	0.119477	0.120450	0.121425
0.18	0.122403	0.123382	0.124364	0.125347	0.126333	0.127321	0.128310	0.129302	0.130296	0.131292
0.19	0.132290	0.133291	0.134292	0.135296	0.136302	0.137310	0.138320	0.139332	0.140345	0.141361
0.20	0.142378	0.143308	0.144419	0.145443	0.146468	0.147494	0.148524	0.149554	0.150587	0.151622
0.21	0.152659	0.153697	0.154737	0.155779	0.156822	0.157867	0.158915	0.159963	0.161013	0.162066
0.22	0.163120	0.164176	0.165233	0.166292	0.167353	0.168416	0.169480	0.170546	0.171613	0.172682
0.23	0.173753	0.174825	0.175900	0.176976	0.178053	0.179131	0.180212	0.181294	0.182378	0.183463
0.24	0.184550	0.185639	0.180729	0.187820	0.188912	0.190007	0.191102	0.192200	0.193299	0.194400
0.25	0.195501	0.196604	0.197709	0.198814	0.199922	0.201031	0.202141	0.203253	0.204368	0.205483
0.26	0.206600	0.207718	0.208837	0.209957	0.211079	0.212202	0.213326	0.214453	0.215580	0.216708
0.27	0.217839	0.218970	0.220102	0.221235	0.222371	0.223507	0.224645	0.225783	0.226924	0.228065
0.28	0.229209	0.230352	0.231408	0.232644	0.233791	0.234941	0.236091	0.237242	0.238395	0.239548
0.29	0.240703	0.241859	0.243016	0.244173	0.245333	0.246494	0.247655	0.248819	0.249983	0.251148
0.30	0.252315	0.253483	0.254652	0.255822	0.256992	0.258165	0.259338	0.260512	0.261687	0.262863
0.31	0.264039	0.265218	0.266397	0.267578	0.268760	0.269942	0.271126	0.272310	0.273495	0.274682
0.32	0.275869	0.277058	0.278247	0.279437	0.280627	0.281820	0.283013	0.284207	0.285401	0.286598
0.33	0.287795	0.288992	0.200191	0.291300	0.292591	0.293793	0.294995	0.296198	0.297403	0.298605
0.34	0.299814	0.301021	0.302228	0.303438	0.304646	0.305857	0.307068	0.308280	0.309492	0.310705
0.35	0.311918	0.313134	0.314350	0.315566	0.316783	0.318001	0.319219	0.320439	0.321660	0.322881
0.36	0.324104	0.325326	0.326550	0.327774	0.328999	0.330225	0.331451	0.332678	0.333905	0.335134
0.37	0.336363	0.337593	0.338823	0.340054	0.341286	0.342519	0.343751	0.344985	0.346220	0.347455
0.38	0.348690	0.349920	0.351164	0.352402	0.353640	0.354879	0.356119	0.357359	0.358599	0.359840
0.39	0.361082	0.362325	0.363568	0.364811	0.366056	0.367300	0.368545	0.369790	0.371036	0.372282
0.40	0.373530	0.374778	0.376026	0.377275	0.378524	0.379774	0.381024	0.382274	0.383526	0.384778
0.41	0.386030	0.387283	0.388537	0.389790	0.391044	0.392298	0.393553	0.394808	0.396063	0.397320
0.42	0.398577	0.399834	0.401092	0.402350	0.403608	0.404866	0.406125	0.407384	0.408645	0.409904
0.43	0.411165	0.412426	0.413687	0.414949	0.416211	0.417473	0.418736	0.419998	0.421261	0.422525
0.44	0.423788	0.425052	0.426316	0.427582	0.428846	0.430112	0.431378	0.432645	0.433911	0.435178

Continued

Table E-3
Continued

COEFFICIENTS FOR PARTIAL VOLUMES OF HORIZONTAL CYLINDERS, C

H/D	0	1	2	3	4	5	6	7	8	9
0.45	0.436445	0.437712	0.438979	0.440246	0.441514	0.442782	0.444050	0.445318	0.446587	0.447857
0.46	0.449125	0.450394	0.451663	0.452932	0.454201	0.455472	0.456741	0.458012	0.459283	0.460554
0.47	0.461825	0.463096	0.464367	0.465638	0.466910	0.468182	0.469453	0.470725	0.471997	0.473269
0.48	0.474541	0.475814	0.477086	0.478358	0.479631	0.480903	0.482176	0.483449	0.484722	0.485995
0.49	0.487269	0.488542	0.489814	0.491087	0.492360	0.493633	0.494906	0.496179	0.497452	0.498726
0.50	0.500000	0.501274	0.502548	0.503821	0.505094	0.506367	0.507640	0.508913	0.510186	0.511458
0.51	0.512731	0.514005	0.515278	0.516551	0.517824	0.519097	0.520369	0.521642	0.522914	0.524186
0.52	0.525459	0.526731	0.528003	0.529275	0.530547	0.531818	0.533090	0.534362	0.535633	0.536904
0.53	0.538175	0.539446	0.540717	0.541988	0.543259	0.544528	0.545799	0.547008	0.548337	0.549606
0.54	0.550875	0.552143	0.553413	0.554682	0.555950	0.557218	0.558486	0.559754	0.561021	0.562288
0.55	0.563555	0.564822	0.566089	0.567355	0.568622	0.569888	0.571154	0.572418	0.573684	0.574948
0.56	0.576212	0.577475	0.578739	0.580002	0.581264	0.582527	0.583789	0.585051	0.586313	0.587574
0.57	0.588835	0.590096	0.591355	0.592616	0.593875	0.595134	0.596392	0.597650	0.598908	0.600166
0.58	0.601423	0.602680	0.603937	0.605192	0.606447	0.607702	0.608956	0.610210	0.611463	0.612717
0.59	0.613970	0.615222	0.616474	0.617726	0.618976	0.620226	0.621476	0.622725	0.623974	0.625222
0.60	0.626470	0.627718	0.628964	0.630210	0.631455	0.632700	0.633944	0.635189	0.636432	0.637675
0.61	0.638918	0.640160	0.641401	0.642641	0.643881	0.645121	0.646360	0.647598	0.648836	0.650074
0.62	0.651310	0.652545	0.653780	0.655015	0.656249	0.657481	0.658714	0.659946	0.661177	0.662407
0.63	0.663637	0.664866	0.666095	0.667322	0.668549	0.669775	0.671001	0.672226	0.673450	0.674674
0.64	0.675896	0.677119	0.678340	0.679561	0.680781	0.681999	0.683217	0.684434	0.685650	0.686866
0.65	0.688082	0.689295	0.690508	0.691720	0.692932	0.694143	0.695354	0.696562	0.697772	0.698979
0.66	0.700186	0.701392	0.702597	0.703802	0.705005	0.706207	0.707409	0.708610	0.709809	0.711008
0.67	0.712205	0.713402	0.714599	0.715793	0.716987	0.718180	0.719373	0.720563	0.721753	0.722942
0.68	0.724131	0.725318	0.726505	0.727690	0.728874	0.730058	0.731240	0.732422	0.733603	0.734782
0.69	0.735961	0.737137	0.738313	0.739488	0.740662	0.741835	0.743008	0.744178	0.745348	0.746517
0.70	0.747685	0.748852	0.750017	0.751181	0.752345	0.753506	0.754667	0.755827	0.756984	0.758141
0.71	0.759297	0.760452	0.761605	0.762758	0.763909	0.765059	0.766209	0.767356	0.768502	0.769648
0.72	0.770791	0.771935	0.773076	0.774217	0.775355	0.776493	0.777629	0.778765	0.779898	0.781030
0.73	0.782161	0.783292	0.784420	0.785547	0.786674	0.787798	0.788921	0.790043	0.791163	0.792282
0.74	0.793400	0.794517	0.795632	0.796747	0.797859	0.798969	0.800078	0.801186	0.802291	0.803396
0.75	0.804499	0.805600	0.806701	0.807800	0.808898	0.809993	0.811088	0.812180	0.813271	0.814361
0.76	0.815450	0.816537	0.817622	0.818706	0.819788	0.820869	0.821947	0.823024	0.824100	0.825175
0.77	0.826247	0.827318	0.828387	0.829454	0.830520	0.831584	0.832647	0.833708	0.834767	0.835824
0.78	0.836880	0.837934	0.838987	0.840037	0.841085	0.842133	0.843178	0.844221	0.845263	0.846303
0.79	0.847341	0.848378	0.849413	0.850446	0.851476	0.852506	0.853532	0.854557	0.855581	0.856602
0.80	0.857622	0.858639	0.859655	0.860668	0.861680	0.862690	0.863698	0.864704	0.865708	0.866709
0.81	0.867710	0.868708	0.869704	0.870698	0.871690	0.872679	0.873667	0.874653	0.875636	0.876618
0.82	0.877597	0.878575	0.879550	0.880523	0.881494	0.882462	0.883428	0.884393	0.885354	0.886314
0.83	0.887272	0.888227	0.889180	0.890131	0.891080	0.892027	0.892971	0.893913	0.894853	0.895789
0.84	0.896725	0.897657	0.808586	0.899514	0.900440	0.901362	0.902283	0.903201	0.904116	0.905029
0.85	0.905939	0.906847	0.907754	0.908657	0.909557	0.910455	0.911350	0.912244	0.913134	0.914021
0.86	0.914906	0.915788	0.916668	0.917544	0.918410	0.919291	0.920159	0.921025	0.921888	0.922749
0.87	0.923607	0.924461	0.925314	0.926164	0.927000	0.927853	0.928693	0.929531	0.930367	0.931198
0.88	0.932028	0.932853	0.933677	0.934497	0.935313	0.936128	0.936938	0.937747	0.938551	0.939352
0.89	0.940150	0.940946	0.941738	0.942526	0.943312	0.044095	0.944874	0.945649	0.946421	0.947190
0.90	0.947956	0.948717	0.949476	0.950232	0.950983	0.951732	0.952477	0.953218	0.953957	0.954690
0.91	0.955421	0.956148	0.956871	0.957590	0.958306	0.959019	0.959757	0.960431	0.961133	0.961829
0.92	0.962522	0.963211	0.963896	0.964577	0.9665253	0.965927	0.966595	0.967260	0.967919	0.968579
0.93	0.969228	0.969876	0.970519	0.971158	0.971792	0.972422	0.973048	0.973669	0.974285	0.974897
0.94	0.975504	0.976106	0.976704	0.977297	0.977885	0.978467	0.979045	0.979618	0.980187	0.980750
0.95	0.981308	0.981859	0.982407	0.982948	0.983485	0.984015	0.984541	0.985060	0.985573	0.986081
0.96	0.986583	0.987080	0.987568	0.988053	0.988530	0.989001	0.989466	0.989924	0.990375	0.990821
0.97	0.991258	0.991690	0.992114	0.992530	0.992939	0.993340	0.993733	0.994119	0.994497	0.994866
0.98	0.995227	0.995579	0.995923	0.996257	0.996581	0.996896	0.997200	0.997493	0.997777	0.998048
0.99	0.998308	0.998555	0.998788	0.999008	0.999212	0.999400	0.999571	0.999721	0.999849	0.999047
1.00	1.000000									

Reprinted by permission of AISI, Committee of Steel Plate Producers and Steel Plate Fabricators Association, Inc. from Steel Plate Engineering Data, Volume 2

APPENDIX F

VESSEL NOMENCLATURE

Types of Vessels

Shop-Fabricated Pressure Vessels

1. Process vessels
   a. Trayed columns
   b. Reactors
   c. Packed columns
2. Drums and miscellaneous vessels
   a. Horizontal
   b. Vertical
3. Storage vessels
   a. Bullets
   b. Spheres

Field-Fabricated Pressure Vessels

- Any of the above listed vessels can be field fabricated; however, normally only those vessels that are too large to transport in one piece are field fabricated.
- Although it is significantly more expensive to field fabricate a vessel, the total installed cost may be cheaper than a shop fab that is erected in a single piece due to the cost of transportation and erection.
- There are always portions of field fab vessels that are shop fabricated. These can be as small as nozzle assemblies or as large as major vessel portions.

Classification of Vessels

Function: Type of vessel, i.e., reactor, accumulator, column, or drum
Material: Steel, cast iron, aluminum, etc.
Fabrication Method: Field/shop fabricated, welded, cast forged, multi-layered, etc.
Geometry: Cylindrical, spherical, conical, etc.
Pressure: Internal, external, atmospheric
Heating Method: Fired or unfired
Orientation: Vertical, horizontal, sloped
Installation: Fixed, portable, temporary
Wall Thickness: Thin/thick walled
Example: Vertical, unfired, cylindrical, stainless steel, heavy-walled, welded reactor for internal pressure

Vessel Parts

Vessel Heads (End Closures)

1. Types
   a. Hemi
   b. Elliptical
   c. Torispherical (flanged and dished)
   d. Conical, toriconical
   e. Flat (bolted or welded)
   f. Misc. (flanged and flued)
   g. Spherically dished covers
   h. Closures (T-bolt, finger pin, quick opening)
2. Types of manufacture
   a. Pressed
   b. Spun
   c. Bumped
   d. Forged
   e. Hot or cold formed
3. Terminology
   a. Knuckle radius
   b. Crown radius
   c. Dished portion
   d. Straight flange

Vessel Supports

1. Types
   a. Skirt (straight or conical)
   b. Legs (braced or unbraced)
   c. Saddles (attached or loose)
   d. Rings
   e. Lugs
   f. Combination (lugs and legs, rings and legs, rings and skirt)

Nozzles

1. Types
   a. Integrally reinforced
   b. Built-up construction
   c. Pad type (studding outlet)
   d. Sight glasses
   e. Elliptical manways

2. Types of service
   a. Manways
   b. Inspection openings
   c. PSV
   e. Instrument connections
   d. Vents
   f. Drains
   g. Process connections

Flanges

1. Types
   a. Slip on
   b. Weld neck, long weld neck
   c. Lap joint
   d. Blind
   e. Screwed
   f. Plate flanges
   g. Studding outlets
   h. Reverse-type flange
   i. Reducing flange
   j. Graylock hub connector
   k. Socket weld
2. Flange Facing
   a. Flat face
   b. Raised face
   c. Finish (smooth, standard, serrated)
   d. Ring joint
   e. Tongue and groove
   f. Male and female

Gaskets

1. Types
   a. Ring, nonasbestos sheet
   b. Flat metal
   c. Spiral wound
   d. Metal jacketed
   e. Corrugated metal
   f. Rings (hexagonal or oval)
   g. Yielding metal gaskets (lens ring, delta ring, rectangular ring)
   h. Elastomeric (rubber, cork, etc.)

Internals

1. Types
   a. Trays, seal pans
   b. Piping distributors
   c. Baffles
   d. Demisters
   e. Packing
   f. Liquid distributors
   g. Vortex breakers
   h. Bed supports
   i. Coils

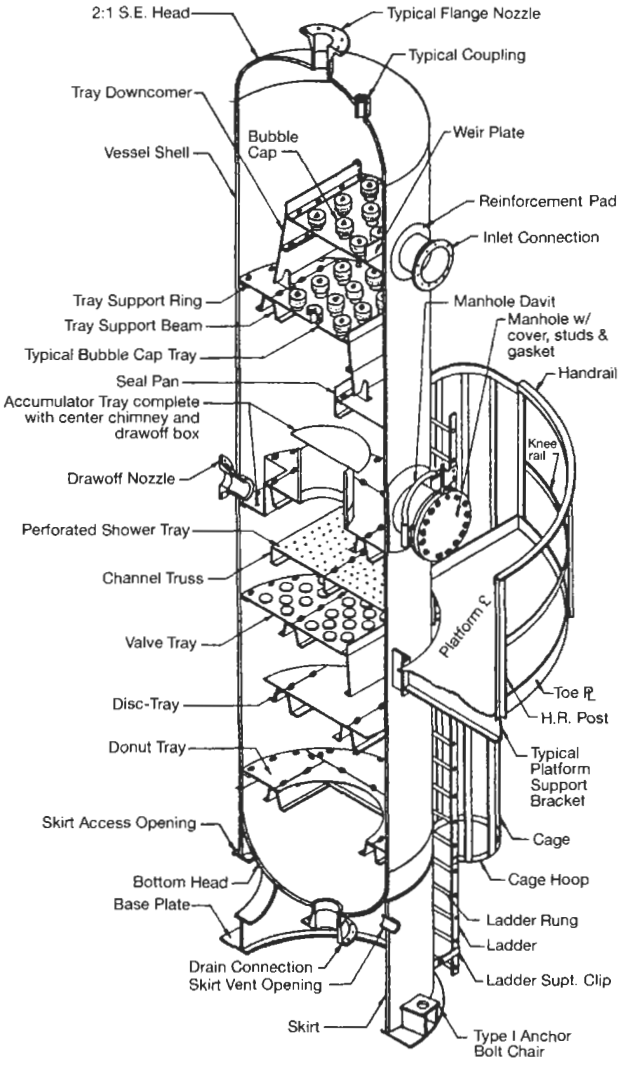

Figure F-1. Typical trayed column.

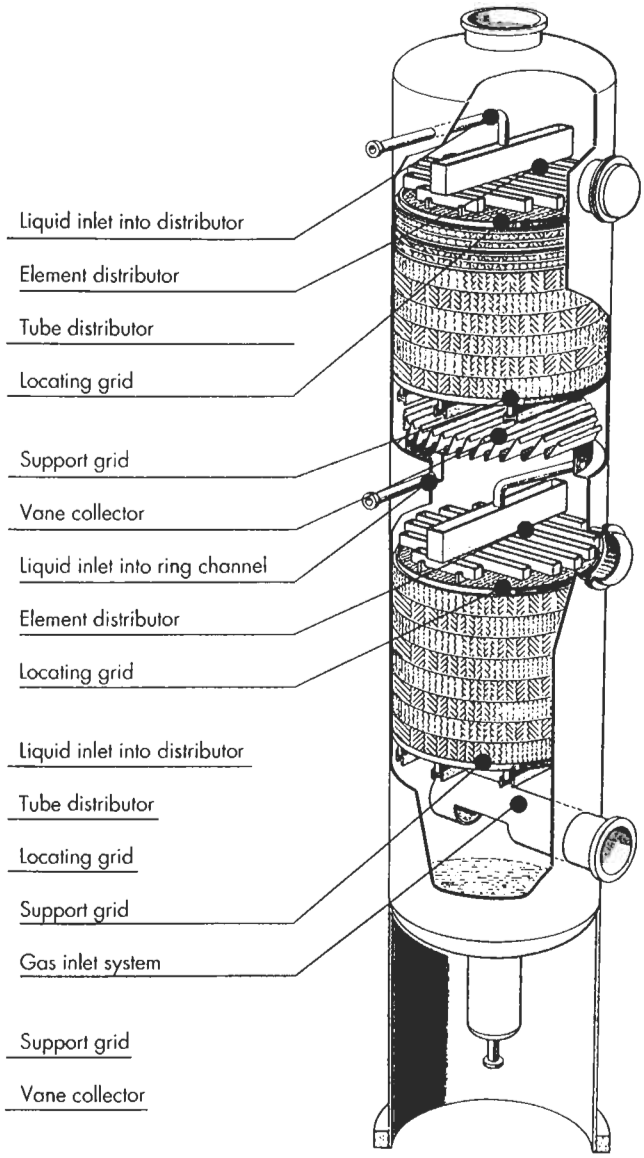

Figure F-2. Typical packed column.

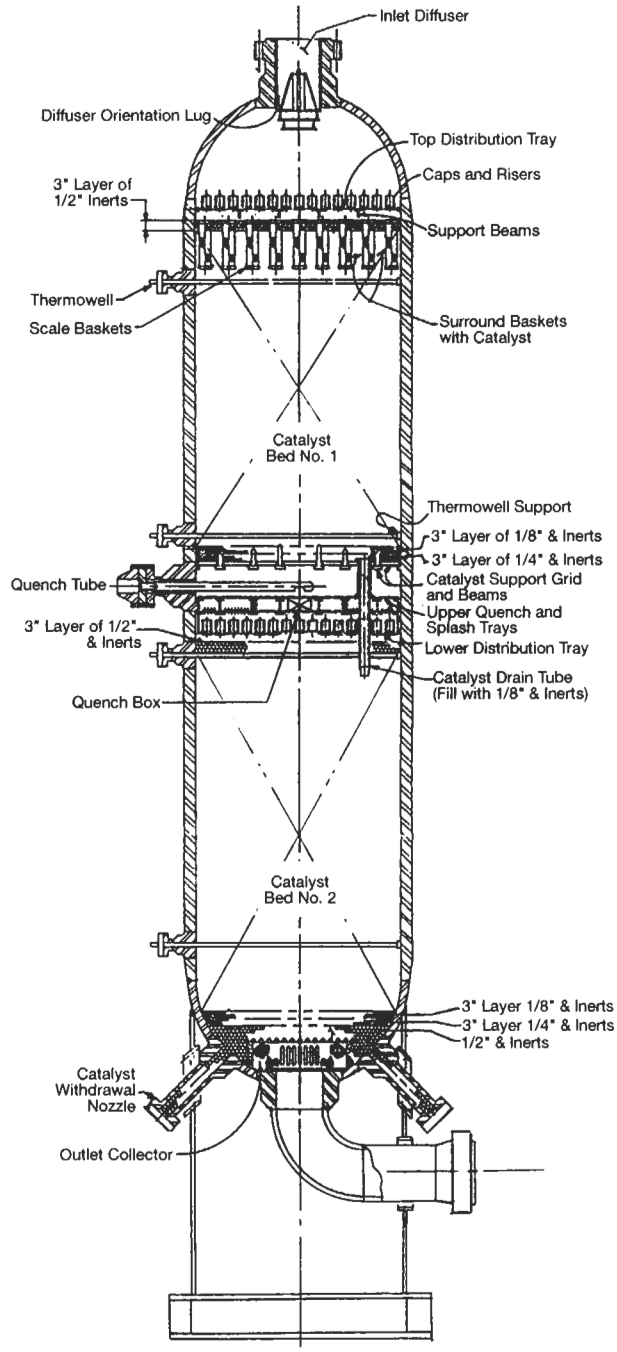

Figure F-3. Typical reactor internals.

Glossary of Vessels Parts

Anchor Bolt Chairs: Gussets and plates welded to base plate and skirt to provide for anchor bolt attachment.

Anchor Bolts: Bolts embedded in concrete foundation and bolted to vessel anchor bolt chairs.

Base Plate: Flat plate welded to the bottom of vessel supports and bearing on the foundation.

Chimney Tray: A tray composed of chimneys extending above the liquid level of the tray, permitting passage of the vapors upward. The tray collects and removes all liquid product from a specific portion of the vessel.

Column Davit: A hoisting device attached by means of a socket to the top of fractionation columns. Used for handling relief valves, bubble trays, bubble caps, etc.

Conical Head: Head formed in the shape of a cone.

Coupling: A fitting welded into the vessel to which the piping is connected either by screwing or welding. This type of fitting is generally used for pipe sizes 1½ in. and smaller.

Distributor Tray: A perforated tray that provides equal distribution of liquid over the vessel area. Risers on the tray extend above the liquid level to permit passage of vapors rising upward.

Downcomers: Rectangular flat plates bolted, welded or clamped to shell and trays inside of fractionation columns. Used to direct process liquid and to prevent bypassing of vapor.

Flanged and Dished (Torispherical) Head: Head formed using two radii, one radius called crown radius, and another called knuckle radius, which is tangent to both the crown radius and the shell.

Flanges (or Pipe Flanges): Fittings used to connect pipes by bolting flanges together.

Flat Head (or Cover Plate): Flat plate welded or bolted to the end of a shell.

Fractionating Trays: Circular flat plates bolted, welded or clamped to rings on the inside of fractionation columns. Used to obtain vapor liquid contact, which results in fractionation.

Head: The end closure of a vessel.

Hemispherical Head: Head formed in the shape of a half sphere.

Insulation Rings: Rings made of flat bar or angle attached around the girth (circumference) of vertical vessels. Used to support the weight of the vessel insulation.

Ladders and Cages: Rung-type ladders with cages built of structural shapes to prevent a man from falling when climbing the ladder. Bolted to and supported by clips on the outside of the vessel. Used for vertical access to the platforms.

Manhole Hinges or Davits: Hinges or davits attached to manhole flange and cover plate which allow cover plate to swing aside from the manhole opening.

Mist Eliminator (or Demister): A wire mesh pad held in place between two light grids. The mist eliminator disengages liquids contained in the vapor.

Nozzle: Generally consists of a short piece of pipe welded in the shell or head with a flange at the end for bolting to the piping.

Pipe Supports and Guides: Supports and guides for attached piping that is bolted to clips, which are welded to the vessel.

Platforms: Platforms bolted to and supported by clips on the outside of the vessel. Generally located just below a manhole, at relief valves, and other valves or connections that need frequent service.

Reinforcing Pad: Plate formed to the contour of shell or head, welded to nozzle and shell or head.

Saddles: Steel supports for horizontal vessels.

Seal Pans: Flat plates bolted, welded, or clamped to rings inside of fractionation column shell below downcomer of lowest tray. Used to prevent vapor from bypassing up through the downcomer by creating a liquid seal.

Shell: The cylindrical portion of a vessel.

Skirt: Cylinder similar to shell, which is used for supporting vertical vessels.

Skirt Access Opening: Circular holes in the skirt to allow workers to clean, inspect, etc., inside of skirt.

Skirt Fireproofing: Brick or concrete applied inside and outside of skirt to prevent damage to skirt in case of fire.

Skirt Vents: Small circular holes in the skirt to prevent collection of dangerous gases within the skirt.

Stub-end: A short piece of pipe or rolled plate welded into the vessel to which the piping is connected by welding.

Support Grid: Grating or some other type of support through which vapor or liquid can pass. Used to support tower packing (catalyst, raschig rings, etc.).

Support Legs: Legs made of pipe or structural shapes that are used to support vertical vessels.

Toriconical Head: Head formed in the shape of a cone and with a knuckle radius tangent to the cone and shell.

2:1 Semielliptical Head: Head formed in the shape of a half ellipse with major to minor axis ratio of 2:1.

Vacuum Stiffener Rings: Rings made of flat bar or plate, or structural shapes welded around the circumference of the vessel. These rings are installed on vessels operating under external pressure to prevent collapse of the vessel. Also used as insulation support rings.

Vessel Manhole: Identical to a nozzle except it does not bolt to piping and it has a cover plate (or blind flange), which is bolted to the flange. When unbolted it allows access to the inside of the vessel. Generally 18 in. or larger in size.

Vortex Breaker: A device located inside a vessel at the outlet connection. Generally consisting of plates welded together to form the shape of a cross. The vortex breaker prevents cavitation in the liquid passing through the outlet connection.

APPENDIX G

USEFUL FORMULAS FOR VESSELS [1, 2]

1. Properties of circle. (See Figure G-1.)

- *C.G. of area.*

$$e_1 = \frac{C^3}{12A_1}$$

$$e_2 = \frac{120C}{\alpha\pi}$$

$$e_3 = \frac{38.197(R^3 - r^3)\sin\phi/2}{(R^2 - r^2)\phi/2}$$

- *Chord, C.*

$$C = 2R\sin\frac{\theta}{2}$$

$$C = 2\sqrt{2bR - b^2}$$

- *Rise, b.*

$$b = 0.5C\tan\frac{\theta}{4}$$

$$b = R - 0.5\sqrt{4R^2 - C^2}$$

- *Angle, θ.*

$$\theta = 2\arcsin\frac{C}{2R}$$

- *Area of sections.*

$$A_1 = \frac{\theta\pi R^2 - 180C(R - b)}{360}$$

$$A_2 = \frac{\pi R^2\alpha}{360}$$

$$A_3 = \frac{(R^2 - r^2)\pi\phi}{360}$$

2. Properties of a cylinder.

- *Cross-sectional metal area, A.*

$$A = 2\pi R_m t$$

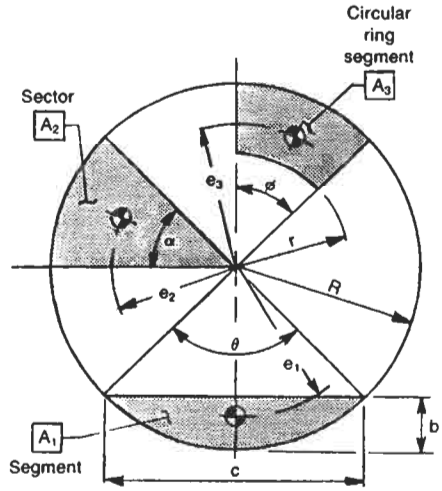

Figure G-1. Dimensions and areas of circular sections.

- *Section modulus, Z.*

$$Z = \pi R_m^2 t = \frac{\pi D_m^2 t}{4} = \frac{\pi(D^4 - d^4)}{32d}$$

- *Polar moment of inertia, J.*

$$J = \frac{\pi(D^4 - d^4)}{32}$$

- *Moment of inertia, I.*

$$I = \pi R_m^3 t = \frac{\pi D_m^3 t}{8} = \frac{\pi(D^4 - d^4)}{64}$$

- *Radius of gyration, r.*

$$r = \sqrt{\frac{I}{A}}$$

3. Radial displacements due to internal pressure.

- *Cylinder.*

$$\delta = \frac{PR^2}{Et}(1 - 0.5\nu)$$

- *Cone.*

$$\delta = \frac{PR^2}{Et\cos\alpha}(1 - 0.5\nu)$$

- *Sphere/hemisphere.*

$$\delta = \frac{PR^2}{2Et}(1 - \nu)$$

- *Torispherical/ellipsoidal.*

$$\delta = \frac{R}{E}(\sigma_\phi - \nu\sigma_x)$$

where P = internal pressure, psi
R = inside radius, in.
t = thickness, in.
ν = Poisson's ration (0.3 for steel)
E = modulus of elasticity, psi
α = ½ apex angle of cone, degrees
σ_ϕ = circumferential stress, psi
σ_x = meridional stress, psi

4. Longitudinal stress in a cylinder due to longitudinal bending moment, M_L.

- *Tension*

$$\sigma_x = \frac{M_L}{\pi R^2 tE}$$

- *Compression*

$$\sigma_x = (-)\frac{M_L}{\pi R^2 t}$$

where E = joint efficiency
R = inside radius, in.
M_L = bending moment, in.-lb
t = thickness, in.

5. Thickness required heads due to external pressure.

$$t_h = \frac{L}{\sqrt{\frac{E}{16P_e}}}$$

where L = crown radius, in.
P_e = external pressure, psi
E = modulus of elasticity, psi

6. Equivalent pressure of flanged connection under external loads.

$$P_e = \frac{16M}{\pi G^3} + \frac{4F}{\pi G^2} + P$$

where P = internal pressure, psi
F = radial load, lb
M = bending moment, in.-lb
G = gasket reaction diameter, in.

7. Bending ratio of formed plates.

$$\% = \frac{100t}{R_f}\left(1 - \frac{R_f}{R_o}\right)$$

where R_f = finished radius, in.
R_o = starting radius, in. (∞ for flat plates)
t = thickness, in.

8. Stress in nozzle neck subjected to external loads.

$$\sigma_x = \frac{PR_m}{2t_n} + \frac{F}{A} + \frac{MR_m}{I}$$

where R_m = nozzle mean radius, in.
t_n = nozzle neck thickness, in.
A = metal cross-sectional, area, $in.^2$
I = moment of inertia, $in.^4$
F = radial load, lb
M = moment, in.-lb
P = internal pressure, psi

9. Circumferential bending stress for out of round shells [2].

$$D_1 - D_2 > 1\%\ D_{nom}$$

$$R_1 = \frac{D_1 + D_2}{2}$$

$$R_a = \frac{D_1 + D_2}{4} + \frac{t}{2}$$

$$\sigma_b = \frac{1.5PR_1t(D_1 - D_2)}{t^3 + 3\left(\frac{P}{E}\right)R_1R_a^2}$$

where D_1 = maximum inside diameter, in.
D_2 = minimum inside diameter, in.
P = internal presure, psi
E = modulus of elasticity, psi
t = thickness, in.

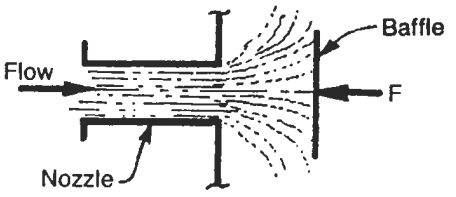

Figure G-2. Typical nozzle configuration with internal baffle.

10. Equivalent static force from dynamic flow.

$$F = \frac{V^2 A d}{g}$$

where F = equivalent static force, lb
V = velocity, ft/sec
A = cross-sectional area of nozzle, ft^2
d = density, lb/ft^3
g = acceleration due to gravity, 32.2 ft/sec^2

11. Allowable compressive stress in cylinders [1].

$$\text{If } \frac{t}{R} \le 0.015,\ X = \frac{10^6 t}{R}\left(2 - \frac{200t}{3R}\right)$$

$$\text{If } \frac{t}{R} > 0.015,\ X = 15{,}000$$

$$\text{If } \frac{L}{R} \le 60,\ Y = 1$$

$$\text{If } \frac{L}{R} > 60,\ Y = \frac{21{,}600}{18{,}000 + \left(\frac{L}{R}\right)^2}$$

$$F_a = \frac{Q}{A} = XY$$

where t = thickness, in.
R = outside radius, in.
L = length of column, in.
Q = allowable load, lb
A = metal cross-sectional area, $in.^2$
F_a = allowable compressive stress, psi

12. Unit stress on a gasket, S_g.

$$S_g = \frac{A_b S_a}{.785[(d_o - .125)^2 - d_i^2]}$$

where A_b = area of bolt, $in.^2$
d_o = O.D. of gasket, in.
d_i = I.D. of gasket, in.
S_a = bolt allow. stress, psi

13. Determine fundamental frequency of a vertical vessel on skirt, f.

$$I = \frac{\pi D_m^3 t}{8}$$

$$m = \frac{\pi D_m t d}{g}$$

$$f = \frac{.560}{(12H)^2}\sqrt{\frac{EI}{m}}$$

where I = moment of inertia, $in.^4$
D_m = mean vessel dia, in.
t = vessel thickness, in.
d = density of steel
= 0.2833 lbs/$in.^3$
g = acceleration due to gravity, 386 in./sec^2
E = modulus of elasticity, psi
H = vessel height, ft
m = mass of vessel per unit length, lb-sec^2/$in.^2$
f = fundamental frequency, Hertz (cycles/second)

14. Maximum quantity of holes in a perforated circular plate.

A = area of circular plate, in.^{2}
D = diameter of circular plate, in.
d = diameter of holes, in.
p = pitch, in.
Q = quantity of holes
K = constant (0.86 for triangular pitch)
R = practical physical radius to fully contain all holes

$$A = \pi R^2$$
$$R = \frac{D - d}{2}$$
$$Q = \frac{A}{Kp^2}$$

15. Divide a circle into "N" equal number of parallel areas.

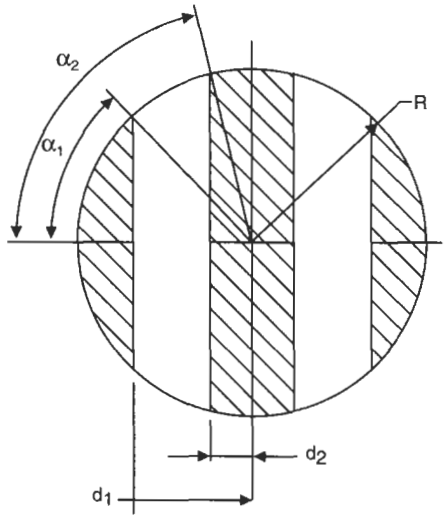

Multiply d_n times R to get actual distances.

Table G-1 Dimensions for Equal Areas

"N" Areas	α_1	α_2	α_3	d_1	d_2	d_3
3	74.65	NA	NA	0.2647	NA	NA
4	66.18	NA	NA	0.4038	NA	NA
5	60.55	80.9	NA	0.4917	0.1582	NA
6	56.4	74.65	NA	0.5534	0.2647	NA
7	53.2	69.6	83.55	0.599	0.3485	0.1123
8	50.63	66.18	78.6	0.6343	0.4038	0.1977

16. Divide a circle into "N" equal number of circular areas.

A_T = total area, in.^{2}
A_n = area of equal part, in.
R = radius to circle, in.
R_n = radius to equal part, in.
N = number of equal parts

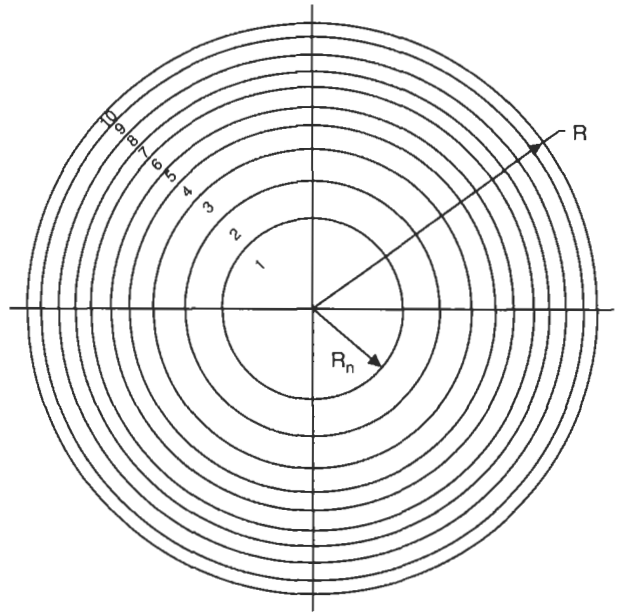

$$A = \pi R^2$$
$$A_n = \frac{A_T}{N}$$
$$R_n = \sqrt{\frac{A_n N}{\pi}}$$

Example: Divide a circle into (10) equal areas.

Answer:

$R_1 = 0.3163R$
$R_2 = 0.4472R$
$R_3 = 0.5477R$
$R_4 = 0.6325R$
$R_5 = 0.7071R$
$R_6 = 0.7746R$
$R_7 = 0.8367R$
$R_8 = 0.8944R$
$R_9 = 0.9487R$
$R_{10} = R$

17. Maximum allowable beam-to-span ratios for beams.

L = unsupported length, in.
d = depth of beam, in.
b = width of beam, in.
t = thickness of compression flange, in.

If $\frac{Ld}{bt} \leq 600$, then the allowable stress = 15,000 psi

If $\frac{Ld}{bt} > 600$, then the allowable stress = $\frac{9{,}000{,}000}{Ld/bt}$

18. Properties of a built-up "I" beam.

$$Z = \frac{td}{6}(6b + d)$$

$$I = \frac{Z}{C}$$

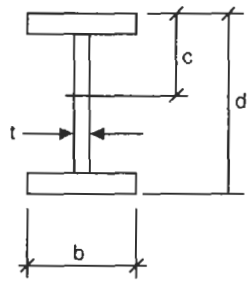

19. Volume required for gas storage.

V = volume, $in.^3$
m = mole weight of contents
R = gas constant
T = temperature, Rankine
P = pressure, psi

$$V = \frac{mRT}{P}$$

APPENDIX H

MATERIAL SELECTION GUIDE

	Design Temperature, °F	Material	Plate	Pipe	Forgings	Fittings	Bolting
Cryogenic	−425 to −321	Stainless steel	SA-240-304, 304L, 347, 316, 316L	SA-312-304, 304L, 347, 316, 316L	SA-182-304, 304L, 347, 316, 316L	SA-403-304, 304L, 347, 316, 316L	SA-320-B8 with SA-194-8
	−320 to −151	9 nickel	SA-353	SA-333-8	SA-522-1	SA-420-WPL8	
Low temperature	−150 to −76	3½ nickel	SA-203-D	SA-333-3	SA-350-LF63	SA-420-WPL3	SA-320-L7 with SA-194-4
	−75 to −51	2½ nickel	SA-203-A				
	−50 to −21	Carbon steel	SA-516-55, 60 to SA-20	SA-333-6	SA-350-LF2	SA-420-WPL6	
	−20 to 4		SA-516-All	SA-333-1 or 6			SA-193-B7 with SA-194-2H
	5 to 32		SA-285-C	SA-53-B SA-106-B	SA-105 SA-181-60,70	SA-234-WPB	
Intermediate	33 to 60 61 to 775		SA-516-All SA-515-All SA-455-II				
Elevated Temperature	776 to 875	C-½Mo	SA-204-B	SA-335-P1	SA-182-F1	SA-234-WP1	
	876 to 1000	1Cr-½Mo	SA-387-12-1	SA-335-P12	SA-182-F12	SA-234-WP12	
		1Cr-½Mo	SA-387-11-2	SA-335-P11	SA-182-F11	SA-234-WP11	
	1001 to 1100	2¼Cr-1Mo	SA-387-22-1	SA-335-P22	SA-182-F22	SA-234-WP22	with SA-193-B5 SA-194-3
	1101 to 1500	Stainless steel	SA-240-347H	SA-312-347H	SA-182-347H	SA-403-347H	SA-193-BB with SA-194-B
		Incoloy	SB-424	SB-423	SB-425	SB-366	
	Above 1500	Inconel	SB-443	SB-444	SB-446	SB-366	

From Bednar, H.H., *Pressure Vessel Design Handbook*, Van Nostrand Reinhold Co., 1981.

APPENDIX I

SUMMARY OF REQUIREMENTS FOR 100% X-RAY AND PWHT*

P No.	GRP. No.	Material Description	PWHT	Temperature °F	100% R.T.
1	1	Carbon steel: SA-36, SA-285-C, SA-515/-516 Grades 55, 60, 65	>1.5 in.	1100°	>1.25 in.
	2	Carbon steel: SA-515/-516 Grade 70, SA-455-I or II	>1.5 in.	1100°	>1.25 in.
3	1	Low alloy: C-½Mo (SA-204-B)	>.625 in.	1100°	>.75 in.
	2	Low alloy: ½Cr-½Mo (SA-387-2-2)	>.625 in.	1100°	>.75 in.
	3	Low alloy: Mn-Mo (SA-302-B)	All	1100°	>.75 in.
4	1	Low alloy: 1Cr-½Mo (SA-387-12-2) 1Cr-½Mo (SA-387-11-2)	(1)	1100°	>.625 in.
5	1	Low alloy: 2Cr-1Mo (SA-387-22-2) 3Cr-1Mo (SA-387-21-2)	All	1250°	All
	2	Low alloy: 5,7,9Cr-½Mo	All	1250°	All
6	1	13Cr (410) Martensitic SST	(2)	1250°	(2)
7	1	13Cr (405, 410S) Martensitic SST	(2)	1350°	(2)
	2	17Cr (430) Ferritic SST	All	1350°	(2)
8	1	(304,316,321,347) Austenitic SST	–	1950°	>1.5 in.
	2	(309,310) Austenitic SST	–	1950°	>1.5 in.
9A	1	Low alloy: 2½Ni (SA-203-A,B)	>.625 in.	1100°	>.625
9B	1	Low alloy: 3½Ni (SA-203-D,E)	>.625 in.	1100°	>.625
41	–	Nickel 200	–	–	>1.5 in.
42	–	Monel 400	–	–	>1.5 in.
43	–	Inconel 600, 625	–	–	>.375 in.
45	–	Incoloy 800, 825	–	–	>.375 in.

*Per ASME Code, Section VIII, Div. 1 for commonly used materials.

Notes:

1. See ASME Code, Section VIII, Div. 1 Table UCS-56, for concessions/restrictions.
2. PWHT or radiography depends upon carbon content, grade of material, type of welding, thickness, preheat and interpass temperatures, and types of electrodes. See ASME Code, Section VIII, Div. 1 Table UHA-32, and paragraphs UHA 32 and 33 for concessions/restrictions.
3. Radiography shall be performed after PWHT when required. 100% R.T. is required for all vessels in lethal service (ASME Code UW-2(a)). Materials requiring impact testing for low temperature service shall be PWHT (ASME Code, UCS-67(c)).
4. Radiography applies to category A and B, type 1 or 2 joints only. Thicknesses refer to thinner of two materials being joined.

APPENDIX J
MATERIAL PROPERTIES

Table J-1
Material Properties

Material		Temp 100°	200°	300°	400°	500°	600°	700°	800°	900°	1000°	1100°	1200°
Carbon steel C ≤ 0.3%	E	29.3	28.8	28.3	27.7	27.3	26.7	25.5	24.2	22.4	20.1	17.8	15.3
	α	6.5	6.67	6.87	7.07	7.25	7.42	7.59	7.76				
	F_y	36	32.9	31.9	30.9	29.2	26.6	26	24	22.9	20.1		
Chrome moly through 2% chrome	E	29.5	29	28.5	27.9	27.5	26.9	26.3	25.5	24.8	23.9	23.0	21.5
	α	5.53	5.89	6.26	6.61	6.91	7.17	7.41	7.59				
	F_y	45.0	41.5	39.5	37.9	36.5	35.3	34	32.4	30.6	28.2		
Chrome moly <3% chrome	E	30.4	29.8	29.4	28.8	28.2	27.7	27.1	26.3	25.6	24.6	23.7	22.5
	α	6.5	6.7	6.9	7.07	7.23	7.38	7.50	7.62	7.9	8.0	8.1	8.2
	F_y	30	27.8	27.1	26.9	26.9	26.9	26.9	26.7	25.7	23.7		
Chrome moly 5–9% chrome	E	30.7	30.1	29.7	29.0	28.6	28.0	27.3	26.1	24.7	22.7	20.4	16.2
	α	5.9	6.0	6.2	6.3	6.5	6.7	6.8	7.0	7.1	7.2	7.3	7.4
	F_y	45	40.7	39.2	38.7	38.4	37.8	36.7	34.7	31.7	27.7		
High chrome 12–17% chrome	E	29.0	28.5	27.9	27.3	26.7	26.1	25.6	24.7	22.2	21.5	19.1	16.6
	α	5.4	5.5	5.7	5.8	6.0	6.1	6.3	6.4	6.5	6.6	6.7	6.8
	F_y	30	27.6	26.6	26.1	25.8	25.3	24.2	22.7	20.3	17.2		
Incoloy 800	E	28.5	27.8	27.3	26.8	26.2	25.7	25.2	24.6				
	α	7.95	8.34	8.6	8.78	8.92	9.00	9.11	9.2				
	F_y	30	27.6	26.0	25	24.1	23.9	23.5	23				
Inconel 600	E	31.7	30.9	30.5	30	29.6	29.2	28.6	27.9				
	α	6.9	7.2	7.4	7.57	7.7	7.82	7.94	8.04				
	F_y	35	32.7	31	29.9	28.8	27.9	27	26.1				
Austenitic stainless steel	E	28.1	27.6	27.0	26.5	25.8	25.3	24.8	24.1	23.5	22.6	22.1	21.2
	α	9.2	9.3	9.5	9.6	9.7	9.8	10.0	10.1	10.2	10.3		
	F_y	30	25.1	22.5	20.8	19.4	18.3	17.7	16.9	16.3	15.6		

Notes:

1. Units are as follows:
   $E = 10^6$ psi
   α = in./in./°F × 10^{-6} from 70°F
   F_y = ksi
2. F_y is for following grades:
   CS ≤ .3% = SA-516-70
   CrMo < 2% = SA-387-11-2
   < 3% = SA-387-22-2
   AUST SST = T-304
   5–9% C_r = SA-387-5-2
3. α = mean coefficient of thermal expansion from 70°.
   E = modulus of elasticity
   F_y = minimum specified yield strength

Source: TEMA, Tables D-10, D-11; ASME Section VIII, Div. 2, Table AMG-1 and AMG-2

Table J-2
Values of Yield Strength, ksi

Material	Temp									
	100°	200°	300°	400°	500°	600°	700°	800°	900°	1000°
SA-285c, SA-516-55	30	27.4	26.6	25.7	24.3	22.2	21.6	20.0	19.1	16.7
SA-516-60	32	29.2	28.4	27.5	26	23.7	23.1	21.3	20.3	17.8
SA-516-65	35	31.9	31	30	28.3	25.9	25.2	23.3	22.2	19.5
SA-105	36	32.9	31.9	30.9	29.2	26.6	26	24.0	22.9	20.1
SA-516-70	38	34.7	33.7	32.6	30.8	28.1	27.4	25.3	24.1	21.2
SA-204-B (C – ½Mo)	40	37.6	36.1	34.8	33.8	32.7	31.5	30.0	27.9	25.2
SA-302-B (Mn – Mo)	50	47.2	45.3	44.5	43.2	42.0	40.6	38.8	34.9	28.4
SA-387-2-2 (½Cr – Mo)	–	–	–	–	–	–	–	–	–	–
SA-387-12-2 (1Cr – ½Mo)	40	36.9	35.1	33.7	32.5	31.4	30.2	28.8	27.2	25.0
SA-387-11-2 (1¼Cr – ½Mo)	45	41.5	39.5	37.9	36.5	35.3	34.0	32.4	30.6	28.2
SA-387-22-2 (2¼Cr – 1Mo)	45	41.3	39.2	38.3	37.2	36.5	35.6	34.3	32.5	29.7
T-405 (13Cr)	25	23.0	22.2	21.8	21.5	21.1	20.2	18.9	16.9	14.4
T-410/T-430 (13/17Cr)	30	27.6	26.6	26.1	25.8	25.3	24.2	22.7	20.3	17.2
T-304 SST	30	25.1	22.5	20.8	19.4	18.3	17.7	16.9	16.3	15.6
T-304L SST	25	21.4	19.2	17.5	16.4	15.5	14.9	14.5	14.0	13.3
T-316 SST	30	25.9	23.4	21.4	20.0	18.9	18.1	17.6	17.3	17.0
T-321 SST	30	25.5	22.7	20.7	19.2	18.2	17.6	17.2	17.0	16.8
T-347 SST	30	27.6	25.7	24.0	22.5	21.5	20.7	20.4	20.2	20.1
SA-203-B (2½ Ni)	40	–	–	–	–	–	–	–	–	–
SA-203-D (3½ Ni)	37	–	–	–	–	–	–	–	–	–
Nickel 200	15	15	15	15	15	15	–	–	–	–
Monel 400	28	24.7	22.4	22.2	22.2	22.2	22.2	21.4	–	–
Inconel 600	35	32.7	31.0	29.9	28.8	27.9	27	26.1	–	–
Incoloy 800	30	27.6	26.0	25.0	24.1	23.9	23.5	23.0	–	–

Source: ASME Section VIII, Div. 2.

Table J-3
Material Specs

Matl	Plate	Pipe	Tube	Bar	Figs	Fittings
Nick 200	SB-162	SB-161	SB-163	SB-160	SB-160	B-366-WPN
Monel 400	SB-127	SB-165	SB-163	SB-164	SB-164	B-366-WPNC
Inco 600	SB-443	SB-444	SB-163	SB-446	SB-166	B-366-WPNCI
Incoloy 825	SB-424	SB-423	SB-163	SB-425	SB-408	–
Hast C-4	SB-575	SB-619	SB-622	SB-574	SB-622	–
Carp 20	SB-463	SB-464	SB-468	SB-473	SB-462	–
SST	SA-240	SA-312	SA-213	SA-276	SA-182	SA-403
			SA-269	SA-479		
CS	SA-516	SA-106-B	SA-179	SA-306	SA-105	SA-234-WPB
Titanium	SB-265	SB-337	SB-338	SB-348	SB-381	SB-363
Alum 6061	SB-209	SB-241	SB-210	SB-211	SB-247	
Chrome	SA-387	SA-335	SA-213	SA-739	SA-182	SA-234
T-405 12 Cr			Use SST Designations			
T-410 13 Cr			Use SST Designations			
T-430 17 Cr			Use SST Designations			
3½ Ni	SA-203-D	SA-333-3	SA-334-3		SA-350-LF3	SA-420-WPL3
Hast G-30	SB-582	SB-622	SB-622	SB-581	SB-581	
Nitronic 50 (UNS) 20910	SA-240-XM19	SA-312-XM19	SA-213-XM19	SA-479-XM19	SA-182-XM19	SA-403-XM19
Inco 800	SB-409	SB-407	SB-407	SB-408	SB-408	B-366

Table J-4
Properties of Commonly Used Pressure Vessel Materials

	Material	Mechanical Properties			Chemical Properties %							
	Designation	UTS	YS	Elong	C max	Si	Mn	P max	S max	Ni	Cr	Mo
PLATE	SA-36	58–80	36	23	0.25			0.04	0.05			
	SA-285-C	55–75	30	27	0.28		0.9	0.035	0.04			
	SA-515-55	55–75	30	27	0.20	0.15–0.40	0.9	0.035	0.04			
	SA-515-60	60–80	32	25	0.24	0.15–0.40	0.9	0.035	0.04			
	SA-515-70	70–90	38	21	0.31	0.15–0.40	1.2	0.035	0.04			
	SA-516-55	55–75	30	27	0.18	0.15–0.40	0.6–0.9	0.035	0.04			
	SA-516-60	60–80	32	23	0.21	0.15–0.40	0.6–0.9	0.035	0.04			
	SA-516-70	70–90	38	21	0.27	0.15–0.40	0.85–1.2	0.035	0.04			
	SA-204-B	70–90	40	21	0.2	0.15–0.40	0.9	0.035	0.04			0.45–0.60
	SA-302-B	80–100	50	18	0.2	0.15–0.40	1.15–1.5	0.035	0.04			0.45–0.60
	SA-387-11-2	75–100	45	22	0.17	0.5–0.8	0.40–0.65	0.035	0.04			
	SA-203-A	65–85	37	19	0.17	0.15–0.40	0.7	0.035	0.04	2.1–2.5		
	SA-203-D	65–85	37	19	0.17	0.15–0.40	0.7	0.035	0.04	3.25–3.75		
	SA-240-304	75	30	40	0.08	1.0	2.0	0.045	0.03	8–10.5	18–20	
	SA-240-316	75	30	40	0.08	1.0	2.0	0.045	0.03	10–14	16–18	2–3
PIPE	SA-53	60	35		0.3		1.2	0.05	0.06			
	SA-106-B	60	35	30	0.3	0.1	0.29–1.06	0.048	0.058			
	SA-333-3	65	35	30	0.19	0.18–0.37	0.31–0.64	0.05	0.05	3.18–3.82		
	SA-333-6	60	35	30	0.3	0.1	0.29–1.06	0.048	0.058			
	SA-335-P1	55	30	30	0.1–0.2	0.1–0.5	0.3–0.8	0.045	0.045			0.44–0.65
	SA-335-P11	60	30	30	0.15	0.50–1.0	0.3–0.6	0.03	0.03		1–1.5	0.44–0.65
	SA-312-304	75	30	35	0.08	0.75	2	0.04	0.03	8–11	18–20	
	SA-312-316	75	30	35	0.08	0.75	2	0.04	0.03	11–14	16–18	2–3
FORGINGS	SA-105	70	36	22	0.35	0.35	0.60–1.05	0.04	0.05			
	SA-350-LF2	70–95	36	22	0.3	0.15–0.30	1.35	0.035	0.04			
	SA-350-LF3	70–95	37.5	22	0.2	0.20–0.35	0.9	0.035	0.04	3.25–3.75		
	SA-182-F1	70	40	25	0.28	0.15–0.35	0.6–0.9	0.045	0.045			0.44–0.65
	SA-182-F11	70	40	20	0.1–0.2	0.50–1.0	0.3–0.8	0.04	0.04		1.0–1.5	0.44–0.65
	SA-182-304	75	30	30	0.08	1.0	2	0.04	0.03	8–11	18–20	
	SA-182-316	75	30	30	0.08	1.0	2	0.04	0.03	10–14	16–18	
MISC.	SA-234-WPB	60	35		0.3	0.1	0.29–1.06	0.05	0.058			
	SA-193-B7	125	105	16	0.37–0.49	0.15–0.35	0.65–1.1	0.04	0.04		0.75–1.2	0.15–0.25
	SA-193-B16	125	105	18	0.36–0.44	0.15–0.35	0.45–0.70	0.04	0.04		0.80–1.15	0.50–0.65
	SA-320-L7	125	105	16	0.38–0.48	0.15–0.35	0.75–1.0	0.035	0.04		0.80–1.1	0.15–0.25

TABLE J-5
Bolting Materials

	Material Specification		
Type of Material	**Symbol**	**Bolts**	**Nuts**
Aluminum alloy 2014-T6	AL	B211, TP-2014-T6	B211, TP-2014-T6
AISI T-501(5 Cr)	B5	SA-193-B5	SA-194-3
AISI T-410(12 Cr)	B6	SA-193-B6	SA-194-6
AISI T-4140, 4142, 4145	B7	SA-193-B7	SA-194-2H
304 SS	B8	SA-193-B8	SA-194-8
Cr-Mo-V	B16	SA-193-B16	SA-194-2H
Carbon steel	CS1	SA-307-B	SA-307-B
Carbon steel	CS2	SA-325	SA-325
Copper alloy, CDA 630	CU	CDA 630 to SB-150	CDA 630 to SB-150
Hastelloy C	HC	SB-336 annealed	SB-336 annealed
Hastelloy X	HX	SA-193 to B-435	SA-193 to B-435
AISI T-4140, 4142, 4145	L7	SA-320-L7	SA-194-4
Monel 400	M4	SA-193 to B-164	SA-193 to B-164
Inconel 600	N6	SA-193 to B-166	SA-193 to B-166
Incoloy 800	L8	SA-193 to B-408	SA-193 to B-408
19 Cr – 9 Ni	SS	SA-453 GR 651, CL A	SA-453 GR 651, CL A
321 SS	8T	SA-193-B8T	SA-194-8T
316 SS	8M	SA-193-B8M	SA-194-8M
Nitronic 60	8S	SA-193-B8S	SA-194-8S

Table J-6
Bolting Application

		Temperature Range, °F											
Service		−121 to −420	−51 to −120	−21 to −50	59 to −20	60 to 399	400 to 649	650 to 849	850 to 999	1000 to 1099	1100 to 1199	1200 to 1499	>1500
Low Temperature	SST	B8	L7	L7									
	ALUM	B8	AL	AL	AL	AL							
	9 Ni	B8	L7	L7	B7	B7							
	3-½ Ni		L7	L7	B7	B7							
	CS			L7	B7	B7							
	Copper			CU	CU	CU	CU						
Intermediate Temperature	C.I.				CS	CS							
	CS				B7	B7	B7						
	Low alloy					B7	B7	B7	B7				
Elevated Temperature	Low alloy					B7	B7	B7	B16	B16	B5		
	321 SS					8T	8T	8T	8T	8T			
	316 SS					8M	8M	8M	8M	8M	8M	8M	
	Corro-sion					M4	M4	M4	M4	N6	N6	L8	L8
	Corro-sion								HC				HX

Table J-7
Bolting Specifications, Applicable ASTM Specifications[15]

Bolting Materials [Note (1)]												
High Strength [Note (2)]			Intermediate Strength [Note (3)]			Low Strength [Note (4)]			Nickel and Special Alloy [Note (5)]		
Spec. No.	Grade	Notes	Spec. No.	Grade	Notes	Spec. No.	Grade	Notes	Spec. No.	Grade	Notes
A 193	B7	—	A 193	B5	—	A 193	B8 Cl.1	(6)	B 164	—	(7)(8)(9)
A 193	B16	—	A 193	B6	—	A 193	B8C Cl.1	(6)			
			A 193	B6X	—	A 193	B8M Cl.1	(6)	B 166	—	(7)(8)(9)
A 320	L7	(10)	A 193	B7M	—	A 193	B8T Cl.1	(6)			
A 320	L7A	(10)	A 193	B8 Cl.2	(11)	A 193	B8A	(6)	B 335	N 10665	(7)
A 320	L7B	(10)	A 193	B8C Cl.2	(11)	A 193	B8CA	(6)			
A 320	L7C	(10)	A 193	B8M Cl.2	(11)	A 193	B8MA	(6)	B 408	—	(7)(8)(9)
A 320	L43	(10)	A 193	B8T Cl.2	(11)	A 193	B8TA	(6)			
									B 473	—	(7)
A 354	BC	—	A 320	B8 Cl.2	(11)	A 307	B	(12)			
A 354	BD	—	A 320	B8C Cl.2	(11)				B 574	N10276	(7)
			A 320	B8F Cl.2	(11)	A 320	B8 Cl.1	(6)			
			A 320	B8M Cl.2	(11)	A 320	B8C Cl.1	(6)			
A 540	B21	—	A 320	B8T Cl.2	(11)	A 320	B8M Cl.1	(6)			
A 540	B22	—				A 320	B8T Cl.1	(6)			
A 540	B23	—	A 449	—	(13)						
A 540	B24	—									
			A 453	651	(14)						
			A 453	660	(14)						

General Note: Bolting material shall not be used beyond temperature limits specified in the governing code.
Notes:
(1) Repair welding of bolting material is prohibited.
(2) These bolting materials may be used with all listed materials and gaskets.
(3) These bolting materials may be used with all listed materials and gaskets, provided it has been verified that a sealed joint can be maintained under rated working pressure and temperature.
(4) These bolting materials may be used with all listed materials but are limited to Classes 150 and 300 joints. See para. 5.4.1 for required gasket practices.
(5) These materials may be used as bolting with comparable nickel and special alloy parts.
(6) This austenitic stainless material has been carbide solution treated but not strain hardened. Use A 194 nuts of corresponding material.
(7) Nuts may be machined from the same material or may be of a compatible grade of ASTM A 194.
(8) Maximum operating temperature is arbitrarily set at 500°F, unless material has been annealed, solution annealed, or hot finished because hard temper adversely affects design stress in the creep rupture range.
(9) Forging quality not permitted unless the producer last heating or working these parts tests them as required for other permitted conditions in the same specification and certifies their final tensile, yield, and elongation properties to equal or exceed the requirements for one of the other permitted conditions.
(10) This ferritic material is intended for low temperature service. Use A 194 Grade 4 or Grade 7 nuts.
(11) This austenitic stainless material has been carbide solution treated and strain hardened. Use A 194 nuts of corresponding material.
(12) This carbon steel fastener shall not be used above 400°F or below – 20°F. See also Note (4). Bolts with drilled or undersized heads shall not be used.
(13) Acceptable nuts for use with quenched and tempered bolts are A 194 Grades 2 and 2H. Mechanical property requirements for studs shall be the same as those for bolts.
(14) This special alloy is intended for high-temperature service with austenitic stainless steel.
(15) ASME Boiler and Pressure Vessel Code, Section II materials, which also meet the requirements of the listed ASTM specifications, may also be used.

Source: Reprinted by permission by ASME from ASME B16.5-1996

Table J-8
Allowable Stress For Bolts

Material	Spec	Class	Min. Spec. Tensile	Min. Spec. Yield	Size, in.	100	200	300	400	500	600	700	800	900	1000	1100	1200
Carbon steel	Sa-307-B		60			7.00	7.00	7.00	7.00								
Carbon steel	SA-325		105	81		20.20	20.20	20.20	20.20	20.20	20.20						
5Cr-½Mo	SA-193-B5		100	80	< 4	20.00	20.00	20.00	20.00	20.00	20.00	20.00	18.50	10.40	5.60	3.10	1.30
13Cr	SA-193-B6		110	85	< 4	21.20	21.20	21.20	21.20	21.20	21.20	21.20	19.50	12.00			
1Cr-⅕Mo	SA-193-B7		125	105	< 2.5	25.00	25.00	25.00	25.00	25.00	25.00	25.00	21.00	12.50	4.50		
			115	95	2.5–4	23.00	23.00	23.00	23.00	23.00	23.00	23.00	20.00	12.50	4.50		
			100	75	4–7	18.70	18.70	18.70	18.70	18.70	18.70	18.70	18.00				
18Cr-8Ni	SA-193-B8	2	125	100	< .75	25.00	25.00	25.00	25.00	25.00	25.00	25.00	25.00	25.00	24.10		
			115	80	.75–1	20.00	20.00	20.00	20.00	20.00	20.00	20.00	20.00	20.00	20.00		
			105	65	1–1.25	16.30	16.30	16.30	16.30	16.30	16.30	16.30	16.30	16.30	16.30		
			100	50	1.25–1.5	12.50	12.50	12.50	12.50	12.50	12.50	12.50	12.50	12.50	12.50		
1Cr-½Mo-V	SA-193-B16		125	105	< 2.5	25.00	25.00	25.00	25.00	25.00	25.00	25.00	25.00	20.50	11.00	2.80	
			110	95	2.5–4	23.00	23.00	23.00	23.00	23.00	23.00	23.00	22.00	18.50	11.00	2.80	
			100	85	4–7	20.00	20.00	20.00	20.00	20.00	20.00	20.00	20.00	16.70	11.00	2.80	
1Cr-½Mn-1/4Mo	SA-540-B22	1	165	150	< 1.5	33.00	33.00	33.00	33.00	33.00	33.00	33.00					
		2	155	140	< 3	31.00	31.00	31.00	31.00	31.00	31.00	31.00					
		3	145	130	< 4	29.00	29.00	29.00	29.00	29.00	29.00	29.00					
		4	135	120	< 4	27.00	27.00	27.00	27.00	27.00	27.00	27.00					
		5	120	105	< 2	24.00	24.00	24.00	24.00	24.00	24.00	24.00					
		5	115	100	2–4	23.00	23.00	23.00	23.00	23.00	23.00	23.00					
1Cr-⅕Mo	SA-320-L7		125	105	< 2.5	25.00	25.00	25.00	25.00	25.00	25.00	25.00					
1C-¼Mo	SA-320-L7A		125	105	< 2.5	25.00	25.00	25.00	25.00	25.00	25.00						
1C-⅕Mo	SA-320-L7M		100	80	< 2.5	20.00	20.00	20.00	20.00	20.00	20.00	20.00	18.50	12.50	4.50		
1¾Ni-¾Cr-¼Mo	SA-320-L43		125	105	< 4	25.00	25.00	25.00	25.00	25.00	25.00	25.00					

Notes:
1. All values are in ksi.
2. Values per ASME, Section II, Part D.

Table J-9
Material Designation and Strength

Material	Bolts SA-193-	Size (dia, in.)	UTS (ksi)	Min Spec Yield (ksi)	Nuts SA-194-
5Cr-½Mo	B5	<4	100	80	3
12Cr (T-410 SS)	B6	<4	110	85	6
1Cr-⅕Mo	B7	<2.5	125	105	2H
1Cr-⅕Mo	B7	2.5 to 4	115	95	2H
1Cr-⅕Mo	B7	4 to 7	100	75	2H
1Cr-⅕Mo	B7M	<2.5	100	80	2H
1Cr-½Mo-V	B16	<2.5	125	105	2H
1Cr-½Mo-V	B16	2.5 to 4	110	95	2H
1Cr-½Mo-V	B16	4 to 7	100	85	2H
304 SS	B8-2	<0.75	125	100	8
304 SS	B8-2	75 to 1	115	80	8
304 SS	B8-2	1 to 1.25	105	65	8
304 SS	B8-2	1.25 to 1.5	100	50	8
316 SS	B8M-2	<0.75	110	95	8M
316 SS	B8M-2	0.75 to 1	100	80	8M
316 SS	B8M-2	1 to 1.25	95	65	8M
316 SS	B8M-2	1.25 to 1.5	90	50	8M
321 SS	B8T-2	<0.75	125	100	8T
321 SS	B8T-2	0.75 to 1	115	80	8T
321 SS	B8T-2	1 to 1.25	105	65	8T
321 SS	B8T-2	1.25 to 1.5	100	50	8T
347 SS	B8C-2	<0.75	125	100	8C
347 SS	B8C-2	75 to 1	115	80	8C
347 SS	B8C-2	1 to 1.25	105	65	8C
347 SS	B8C-2	1.25 to 1.5	100	50	8C
Nitronic 60	B8S	—	95	50	8S
SA-320 (Low Temp)					
304 SS	B8A	—	75	30	8
316 SS	B8MA	—	75	30	8M
321 SS	B8TA	—	75	30	8T
347 SS	B8CA	—	75	30	8C

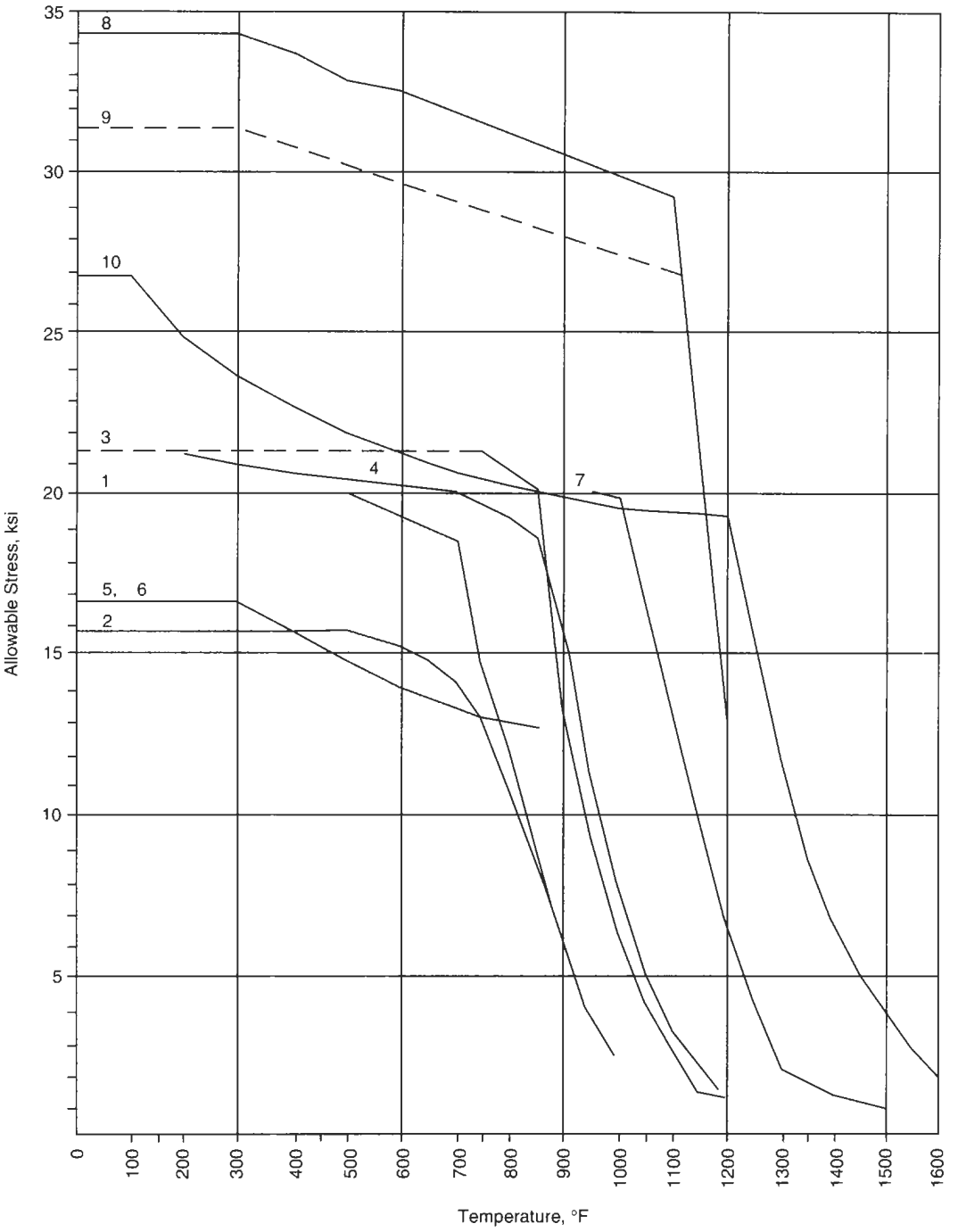

Figure J-1. Allowable stresses per ASME, Section VIII, Division 1 and Section II, Part D

Materials:

1. SA-516-70, SA-515-70
2. SA-285-C
3. SA-387-11-2
4. SA-387-22-2
5. SA-240-316L, High Stress
6. SA-240-304L, High Stress
7. SB-409-800
8. SB-443-625-1, High Stress
9. SB-443-625-1, Low Stress
10. SB-443-625-2, High Stress

APPENDIX K

METRIC CONVERSIONS

Unit	Multiply By:	To Obtain:
bar	1.0197	kg/cm^2
bar	14.50377	psi
bar	100	kpa
ft/lb	0.136	kg-m
ft/lb	1.358	N-m
ft	0.3048	m
ft	304.8	mm
ft^2	0.0929	m^2
ft^3	28,317	cm^3
ft^3	0.028317	m^3
ft^3	28.316	liters
gallons	3785.43	cm^3
gallons	3.7856	liters
$in.^3$	16.387	cm^3
in.-lb	0.0115	kg-m
in.-lb	0.113	N-m
kg/m^2	0.2048	psf
kg/m^2	0.001422	psi
kg/m^2	9.80665	pascals
kg/m	0.671969	lb/ft
kg/m	0.055997	lb/in.
kg/m^3	0.06243	pcf
kg/m^3	0.00003613	pci
kg/cm^2	98.066875	kpa
kg/cm^2	14.22334	psi
kg/mm^2	9806.65	kpa
kg/mm^2	1419.35	psi
kpa	20.885	psf
kpa	0.145	psi
liters/kg	0.01602	ft^3/lb
liters	61.03	$in.^3$
liters	0.2642	gallons
lbs	0.45359	kg
lbs/ft^3	16.0183	kg/m^3
mm^2	0.00155	$in.^2$
m^3	35.314	ft^3
m	3.2808	ft
newton	4.448222	lb
newton	9.786	kg
$newton/m^2$	0.0207	lbs/ft^2
psi	6894.76	pascals
psi	6.894757	kPa
psi	0.006894	mPa
psi	0.07045	kg/cm^2
psi	0.0007045	kg/mm^2
psi	0.06897	bars
psf	4.8826	kg/m^2
pascals	6894.76	psi
cu yards	0.7646	m^3
weight of water = 1001 kg/m^3		
temperature: $°F = 1.8°C + 32$		
$°C = 0.555\ (°F - 32)$		

APPENDIX L

ALLOWABLE COMPRESSIVE STRESS FOR COLUMNS, F_A

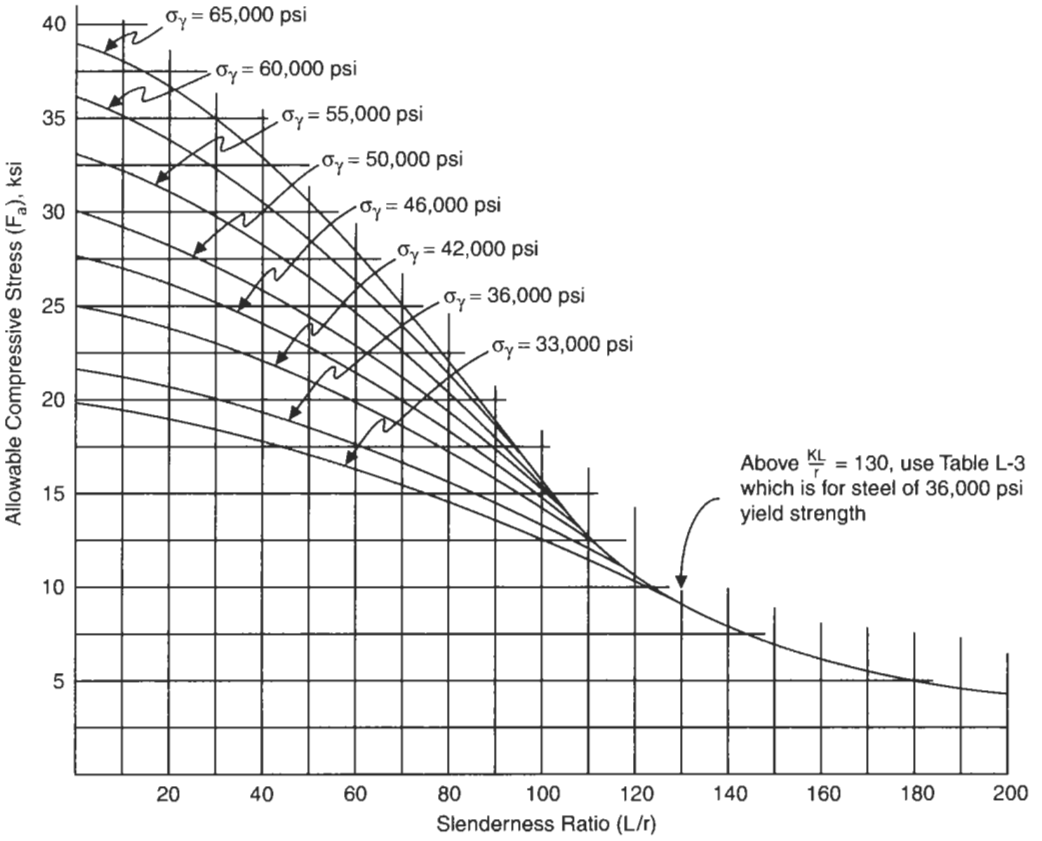

Reprinted by permission of the James F. Lincoln Arc Welding Foundation

Table L-1
End Connection Coefficients

	(a)	(b)	(c)	(d)	(e)	(f)
Buckled shape of column is shown by dashed line	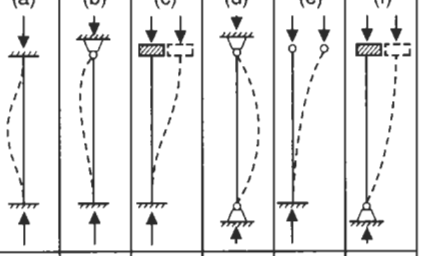					
Theoretical K value	0.5	0.7	1.0	1.0	2.0	2.0
Recommended design value when ideal conditions are approximated	0.65	0.80	1.2	1.0	2.10	2.0
End condition code	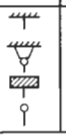	Rotation fixed and translation fixed Rotation free and translation fixed Rotation fixed and translation free Rotation free and translation free				

Reprinted by permission of AISC.

Table L-2

33,000-psi-Yield Steel

L/r Ratio		1	2	3	4	5	6	7	8	9
		19,770	19,730	19,690	19,660	19,620	19,580	19,540	19,500	19,460
10	19,410	19,370	19,320	19,280	19,230	19,180	19,130	19,080	19,030	18,980
20	18,930	18,880	18,820	18,770	18,710	18,660	18,600	18,540	18,840	18,420
30	18,360	18,300	18,240	18,180	18,110	18,050	17,980	17,920	17,850	17,780
40	17,710	17,640	17,570	17,500	17,430	17,360	17,290	17,220	17,140	17,070
50	16,990	16,920	16,840	16,760	16,680	16,600	16,520	16,440	16,360	16,280
60	16,200	16,120	16,030	15,950	15,860	15,780	15,690	15,610	15,520	15,430
70	15,340	15,250	15,160	15,070	14,980	14,890	14,800	14,700	14,610	14,510
80	14,420	14,320	14,230	14,130	14,030	13,930	13,840	13,740	13,640	13,530
90	13,430	13,330	13,230	13,130	13,020	12,920	12,810	12,710	12,600	12,490
100	12,380	12,280	12,170	12,060	11,950	11,830	11,720	11,610	11,900	11,380
110	11,270	11,150	11,040	10,920	10,800	10,690	10,570	10,450	10,330	10,210
120	10,090	9,996	9,840	9,720	9,590	9,470	9,340	9,220	9,090	8,960
130	8,830	8,700	8,570	8,440	8,320	8,190	8,070	7,960	7,840	7,730
140	7,620	7,510	7,410	7,300	7,200	7,100	7,010	6,910	6,820	6,730
150	6,640	6,550	6,460	6,380	6,300	6,220	6,140	6,060	5,980	5,910
160	5,830	5,760	5,690	5,620	5,550	5,490	5,420	5,350	5,290	5,230
170	5,170	5,110	5,050	4,990	4,930	4,880	4,820	4,770	4,710	4,660
180	4,610	4,560	4,510	4,460	4,410	4,360	4,320	4,270	4,230	4,180
190	4,140	4,090	4,050	4,010	3,970	3,930	3,890	3,850	3,810	3,770
200	3,730									

Above L/r of 130, the higher-strength steels offer no advantage as to allowable compressive stress (f_a). Above this point, use Table L-3 for the more economical steel of 36,000-psi-yield strength.

Table L-3

36,000-psi-Yield Steel

L/r Ratio		1	2	3	4	5	6	7	8	9
		21,560	21,520	21,480	21,440	21,390	21,350	21,300	21,250	21,210
10	21,160	21,100	21,050	21,000	20,950	20,890	20,830	20,780	20,720	20,660
20	20,600	20,540	20,480	20,410	20,350	20,280	20,220	20,150	20,080	20,010
30	19,940	19,870	19,800	19,730	19,650	19,580	19,500	19,420	19,350	19,270
40	19,190	19,110	19,030	18,950	18,860	18,780	18,700	18,610	18,530	18,440
50	18,350	18,260	18,170	18,080	17,990	17,900	17,810	17,710	17,620	17,530
60	17,430	17,330	17,240	17,140	17,040	16,940	16,840	16,740	16,640	16,530
70	16,430	16,330	16,220	16,120	16,010	15,900	15,790	15,690	15,580	15,470
80	15,360	15,240	15,130	15,020	14,900	14,790	14,670	14,560	14,440	14,320
90	14,200	14,090	13,970	13,840	13,720	13,600	13,480	13,350	13,230	13,100
100	12,980	12,850	12,720	12,590	12,470	12,330	12,200	12,070	11,940	11,810
110	11,670	11,540	11,400	11,260	11,130	10,990	10,850	10,710	10,570	10,430
120	10,280	10,140	9,990	9,850	9,700	9,550	9,410	9,260	9,110	8,970
130	8,840	8,700	8,570	8,440	8,320	8,190	8,070	7,960	7,840	7,730
140	7,620	7,510	7,410	7,300	7,200	7,100	7,010	6,910	6,820	6,730
150	5,640	6,550	6,460	6,380	6,300	6,220	6,140	6,060	5,980	5,910
160	5,830	5,760	5,690	5,620	5,550	5,490	5,420	5,350	5,290	5,230
170	5,170	5,110	5,050	4,990	4,930	4,880	4,820	4,770	4,710	4,660
180	4,610	4,560	4,510	4,460	4,410	4,360	4,320	4,270	4,230	4,180
190	4,140	4,090	4,050	4,010	3,970	3,930	3,890	3,850	3,810	3,770
200	3,730									

Above L/r of 130, the higher-strength steels offer no advantage as to allowable compressive stress (f_a). Above this point, use this table.

Table L-4
42,000-psi-Yield Steel

L/r Ratio		1	2	3	4	5	6	7	8	9
		25,150	25,100	25,050	24,990	24,940	24,880	24,820	24,760	24,700
10	24,630	24,570	24,500	24,430	24,360	24,290	24,220	24,150	24,070	24,000
20	23,920	23,840	23,760	23,680	23,590	23,510	23,420	23,330	23,240	23,150
30	23,060	22,970	22,880	22,780	22,690	22,590	22,490	22,390	22,290	22,190
40	22,080	21,980	21,870	21,770	21,660	21,550	21,440	21,330	21,220	21,100
50	20,990	20,870	20,760	20,640	20,520	20,400	20,280	20,160	20,030	19,910
60	19,790	19,660	19,530	19,400	19,270	19,140	19,010	18,880	18,750	18,610
70	18,480	18,340	18,200	18,060	17,920	17,780	17,640	17,500	17,350	17,210
80	17,060	16,920	16,770	16,620	16,470	16,320	16,170	16,010	15,860	15,710
90	15,550	15,390	15,230	15,070	14,910	14,750	14,590	14,430	14,260	14,090
100	13,930	13,760	13,590	13,420	13,250	13,080	12,900	12,730	12,550	12,370
110	12,190	12,010	11,830	11,650	11,470	11,280	11,100	10,910	10,720	10,550
120	10,370	10,200	10,030	9,870	9,710	9,560	9,410	9,260	9,110	8,970

Above L/r of 130, the higher-strength steels offer no advantage as to allowable compressive stress (f_a). Above this point, use Table L-3 for the more economical steel of 36,000-psi-yield strength.

Table L-5
46,000-psi-Yield Steel

L/r Ratio		1	2	3	4	5	6	7	8	9
		27,540	27,480	27,420	27,360	27,300	27,230	27,160	27,090	27,020
10	26,950	26,870	26,790	26,720	26,630	26,550	26,470	26,380	26,290	26,210
20	26,110	26,020	25,930	25,830	25,730	25,640	25,540	25,430	25,330	25,230
30	25,120	25,010	24,900	24,790	24,680	24,560	24,450	24,330	24,210	24,100
40	23,970	23,850	23,730	23,600	23,480	23,350	23,220	23,090	22,960	22,830
50	22,690	22,560	22,420	22,280	22,140	22,000	21,860	21,720	21,570	21,430
60	21,280	21,130	20,980	20,830	20,680	20,530	20,370	20,220	20,060	19,900
70	19,740	19,580	19,420	19,260	19,100	18,930	18,760	18,600	18,430	18,260
80	18,080	17,910	17,740	17,560	17,390	17,210	17,030	16,850	16,670	16,480
90	16,300	16,120	15,930	15,740	15,550	15,360	15,170	14,970	14,780	14,580
100	14,390	14,190	13,990	13,790	13,580	13,380	13,170	12,960	12,750	12,540
110	12,330	12,120	11,900	11,690	11,490	11,290	11,100	10,910	10,720	10,550
120	10,370	10,200	10,030	9,870	9,710	9,560	9,410	9,260	9,110	8,970

Above L/r of 130, the higher-strength steels offer no advantage as to allowable compressive stress (f_a). Above this point, use Table L-3 for the more economical steel of 36,000-psi-yield strength.

Table L-6
50,000-psi-Yield Steel

L/r Ratio		1	2	3	4	5	6	7	8	9
		29,940	29,870	29,800	29,730	29,660	29,580	29,500	29,420	29,340
10	29,260	29,170	29,080	28,990	28,900	28,800	28,710	28,610	28,510	28,400
20	28,300	28,190	28,080	27,970	27,860	27,750	27,630	27,520	27,400	27,280
30	27,150	27,030	26,900	26,770	26,640	26,510	26,380	26,250	26,110	25,970
40	25,830	25,690	25,550	25,400	25,260	25,110	24,960	24,810	24,660	24,510
50	24,350	24,190	24,040	23,880	23,720	23,550	23,390	23,220	23,060	22,890
60	22,720	22,550	22,370	22,200	22,020	21,850	21,670	21,490	21,310	21,120
70	20,940	20,750	20,560	20,380	20,190	19,990	19,800	19,610	19,416	19,210
80	19,010	18,810	18,610	18,410	18,200	17,990	17,790	17,580	17,370	17,150
90	16,940	16,720	16,500	16,290	16,060	15,840	15,520	15,390	15,170	14,940
100	14,710	14,470	14,240	14,000	13,770	13,530	13,290	13,040	12,800	12,570
110	12,340	12,120	11,900	11,690	11,490	11,290	11,100	10,910	10,720	10,550
120	10,370	10,200	10,030	9,870	9,710	9,560	9,410	9,260	9,110	8,970

Above L/r of 130, the higher-strength steels offer no advantage as to allowable compressive stress (f_a). Above this point, use Table L-3 for the more economical steel of 36,000-psi-yield strength.

Reprinted by permission of the James F. Lincoln Arc Welding Foundation

APPENDIX M

DESIGN OF FLAT PLATES

Table M-1

Flat Plate Formulas

Shape	Loading	Edge Fixation	Maximum Fiber Stress. f, psi	Center Deflection, Δ, In.	Remarks
Circle radius R	Uniform p	Fixed	$0.75p\frac{R^2}{t^2}$	$0.17\left(\frac{p}{E}\right)\frac{R^4}{t^3}$	f max. at edge
		Supported	$1.24p\frac{R^2}{t^2}$	$0.695\left(\frac{p}{E}\right)\frac{R^4}{t^3}$	f max. at center
	Central concentrated P on r	Fixed	$1.43\left[\log_{10}\left(\frac{R}{t}\right)+0.11\left(\frac{r}{R}\right)^2\right]\frac{P}{t^2}$	$0.22\left(\frac{P}{E}\right)\frac{R^2}{t^3}$	P uniform over circle, radius r Center stress
		Supported	$1.43\left[\log_{10}\left(\frac{R}{t}\right)+0.334+0.06\left(\frac{r}{R}\right)^2\right]\frac{P}{t^2}$	$0.55\left(\frac{P}{E}\right)\frac{R^2}{t^3}$	As above Center stress
Ellipse 2A × 2a a < A	Uniform p	Fixed	$\frac{6}{3n^4+2n^2+3}p\frac{a^2}{t^2}$	$\frac{1.365}{3n^4+2n^2+3}\left(\frac{p}{E}\right)\frac{a^4}{t^3}$	$n=\frac{a}{A}$, exact solution
		Supported	$\frac{3}{0.42n^4+n^2+1}p\frac{a^2}{t^2}$ (1)		$n=\frac{a}{A}$, approximate fits n = 0 and n = 1
	Central concentrated p	Fixed	$\frac{50}{3n^4+2n^2+12.5}\frac{P}{t^2}$ (2)		$n=\frac{a}{A}$, approximate Fits n = 0 and n = 1 Load over 0.01% of area
		Supported	$\frac{13.1}{0.42n^4+n^2+2.5}\frac{P}{t^2}$ (2)		$n=\frac{a}{A}$, approximate Fits n = 1 Load over 0.01% of area
Rectangle B × b b < B	Uniform p	Fixed	$B_1p\frac{b^2}{t^2}$	$\phi_1\left(\frac{p}{E}\right)\frac{b^4}{t^3}$	ϕ_1 and B_1 depend on $\frac{B}{b}$. See Table M-2.
		Supported	$B_2p\frac{b^2}{t^2}$	$\phi_2\left(\frac{p}{E}\right)\frac{b^4}{t^3}$	ϕ_2 and B_2 depend on $\frac{B}{b}$. See Table M-2.
	Central concentrated p	Fixed	$\frac{4.00}{1+2n^2}\frac{P}{t^2}$ (3)	$\phi_3\left(\frac{p}{E}\right)\frac{b^2}{t^3}$	$\frac{b}{B}=n$, approximate Fits n = 1 and n = 0
		Supported	$\frac{5.3}{1+2.4n^2}\frac{P}{t^2}$ (3)		$\frac{b}{B}=n$, approximate Fits n = 1 and n = 0
Square B × B	Uniform p	Fixed	$0.308p\frac{B^2}{t^2}$	$0.0138\left(\frac{p}{E}\right)\frac{B^4}{t^3}$	f max. at center of side
		Supported	$0.287p\frac{B^2}{t^2}$	$0.0443\left(\frac{p}{E}\right)\frac{B^4}{t^3}$	f max. of center
	Central concentrated p	Fixed	$1.32\frac{P}{t^2}$		As above Deflection nearly exact
		Supported	$1.58\frac{P}{t^2}$	$0.125\left(\frac{P}{E}\right)\frac{B^2}{t^3}$	Approximate for f Area of contact not too small
Flat Stayed Plate	Uniform p	Staybolts spaced at corners of square of side S	$0.228p\frac{S^2}{t^2}$	$0.0284\left(\frac{p}{E}\right)\frac{S^4}{t^3}$	If plate as a whole deforms, superimpose the stresses and deflections on those for flat plate when loaded
Circular Flanged	Uniform p	Fastened to shell	$p\left[\frac{r}{2t}+\phi\left(\frac{R-\frac{r}{2}1+\frac{r}{R}}{t}\right)^2\right]$		ϕ varies with shell and joint stiffness from 0.33 to 0.38 knuckle radius, r

1) Formula of proper form to fit circle and infinite rectangle as n varies from 1 to 10.
2) Formulas for load distributed over 0.0001 plate area to match circle when n = 1. They give reasonable values for stress when n = 0. Stress is lower for larger area subject to load.
3) Formulas of empirical form to fit Hutte values for square when n = 1. They give reasonable values when n = 0. Assume load on 0.01 of area.
4) Only apparent stresses considered.
5) These formulas are not to be used in determining failure.
Reprinted by permission of AISI, Committee of Steel Plate Producers and Steel Plate Fabricators Association, Inc. from Steel Plate Engineering Data, Volume 2

Table M-2
Flat Plate Coefficients

Stress Coefficients—Circle with Concentrated Center Load											
r/R	1.0	0.10	0.09	0.08	0.07	0.06	0.05	0.04	0.03	0.02	0.01
Fixed[1]	0.157	1.43	1.50	1.57	1.65	1.75	1.86	2.00	2.18	2.43	2.86
Supported[2]	0.563	1.91	1.97	2.05	2.13	2.23	2.34	2.48	2.66	2.91	3.34
Stress and Deflection Coefficients—Ellipse											
A/a	1.0	1.2	1.4	1.6	1.8	2.0	2.5	3.0	4.0	5.0	∞
Uniform Load											
Fixed											
Stress[3]	0.75	1.03	1.25	1.42	1.54	1.63	1.77	1.84	1.91	1.95	2.00
Deflection[4]	0.171	0.234	1.284	0.322	0.350	0.370	0.402	0.419	0.435	0.442	0.455
Uniform Load											
Supported[5]	1.24	1.58	1.85	2.06	2.22	2.35	2.56	2.69	2.82	2.88	3.00
Central Load											
Fixed[6]	2.86	3.26	3.50	3.64	3.73	3.79	3.88	3.92	3.96	3.97	4.00
Supported[7]	3.34	3.86	4.20	4.43	4.60	4.72	4.90	5.01	5.11	5.16	5.24
Stress and Deflection Coefficients—Rectangle											
B/b	1.0	1.25	1.5	1.6	1.75	2.0	2.5	3.0	4.0	5.0	∞
Stress B_1	0.308	0.399	0.454		0.490	0.497					0.500
Stress B_2	0.287	0.376	0.452	0.517	0.569	0.610	0.650	0.713	0.741	0.748	0.750
$\frac{4}{1+2n^2}$	1.33	1.75	2.12	2.25	2.42	2.67	3.03	3.27	3.56	3.70	4.00
$\frac{5.3}{1+2.4n^2}$	1.56	2.09	2.56	2.74	2.97	3.31	3.83	4.18	4.61	4.84	5.30
Deflection ϕ_1	0.0138	0.0199	0.0240		0.0264	0.0277					0.0284
Deflection ϕ_2	0.0443	0.0616	0.0770	0.0906	0.1017	0.1106	0.125	0.1336	0.1400	0.1416	0.1422
Deflection ϕ_3	0.1261		0.1671			0.1802		0.1843	0.1848		0.1849

[1]Values of $1.43\ [\log_{10}R/r + 0.11\,(r/R)^2]$
[2]Values of $1.43\ [\log_{10}R/r + 0.334 + 0.06(r/R)^2]$
[3]Values of $6/(3n^4 + 2n^2 + 3)$
[4]Values of $1.365/(3n^4 + 2n^2 + 3)$
[5]Values of $3/(0.42n^4 + n^2 + 1)$
[6]Values of $50/(3n^4 + 2n^2 + 12.5)$
[7]Values of $13.1/(0.42n^4 + n^2 + 2.5)$
Reprinted by permission of AISI, Committee of Steel Plate Producers and Steel Plate Fabricators Association, Inc. from Steel Plate Engineering Data, Volume 2

APPENDIX N

EXTERNAL INSULATION FOR VERTICAL VESSELS

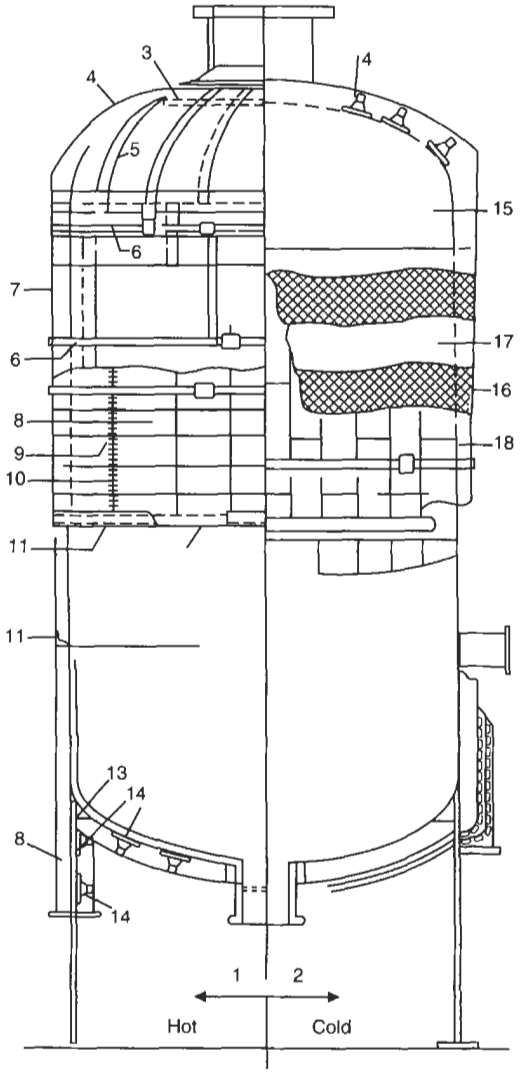

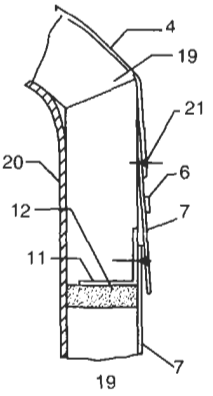

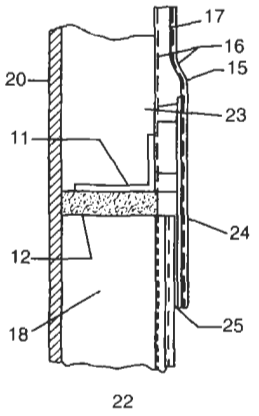

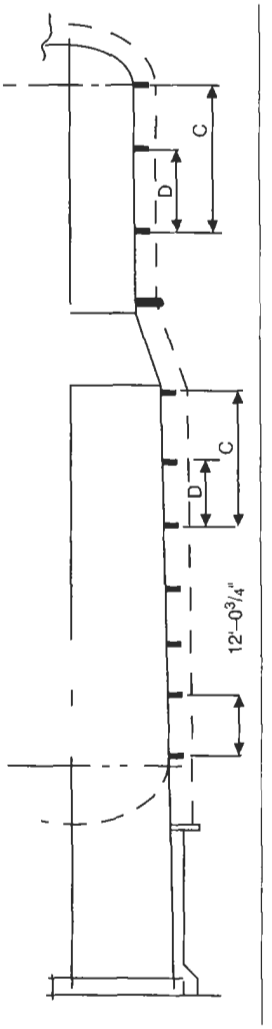

Terminology

1. Blanket insulation with metal weatherproofing
2. Block insulation with mastic weatherproofing
3. Steel ring
4. Metal weatherproofing
5. Lap sealer
6. Circumferential band
7. Corrugated metal weatherproofing
8. Blanket insulation
9. Wire lacing
10. Hog rings
11. Angle ring support
12. Loose mineral fiber
13. Air space
14. Clip
15. Mastic weatherproofing coating
16. Wire mesh or glass fabric
17. Insulating or finishing cement
18. Block insulation
19. Expansion joint
20. Vessel wall
21. Self-tapping screws
22. Expansion joint for block insulation with mastic weatherproofing
23. Resin-sized paper
24. Hardware cloth
25. Clearance for expansion

Skirt, Fireproofing, and Insulation Details

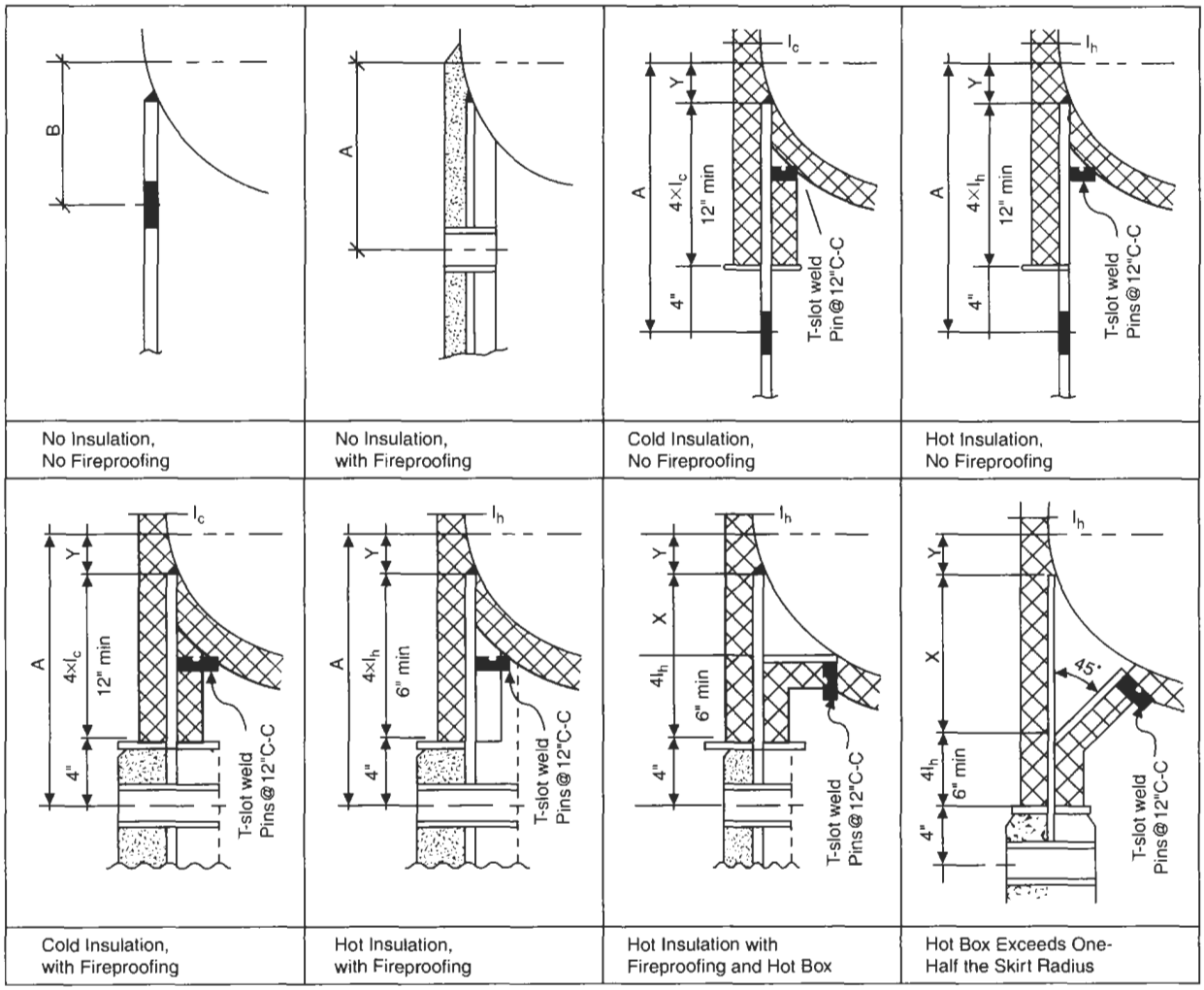

No Insulation, No Fireproofing	No Insulation, with Fireproofing	Cold Insulation, No Fireproofing	Hot Insulation, No Fireproofing
Cold Insulation, with Fireproofing	Hot Insulation, with Fireproofing	Hot Insulation with Fireproofing and Hot Box	Hot Box Exceeds One-Half the Skirt Radius

Notes:

1. Use hot box if design temperature exceeds 500°F.
2. "X" = 12" if design temperature is between 500°F and 749°F.
3. "X" = 18" if design temperature is between 750°F and 1000°F.
4. Use segmental insulation support rings if the design temperature > 600°F or insulation thickness > 3".
5. If there is no skirt, weld nuts to the underside of the head @ 16" C-C to support the insulation.
6. Bottom insulation support ring width is I + 0.5'. All other insulation rings shall be ½ the insulation thickness.
7. Insulation support ring spacing shall be as follows:

When "C" is:	"D" shall be:
Greater than 12'-0¾" but less than 18'-0¾".	C/2 increased to nearest multiple of 3'-0", then add ¾".
Greater than 18'-0¾"	12'-0¾"

Table N-1
Skirt Dimensions

Dia, In.	A	B	Dia, In.	A	B
24	10	7	108	18	11
30	10	8	114	18	12
36	11	8	120	19	12
42	12	8	126	19	12
48	13	9	132	19	12
54	13	9	138	19	13
60	14	9	144	20	13
66	15	10	150	20	13
72	15	10	156	20	13
78	15	10	162	21	13
84	16	10	168	21	14
90	17	11	174	21	14
96	17	11	180	22	14
102	17	11			

APPENDIX O

FLOW OVER WEIRS

Notation

b = width, ft
H = static head of liquid, ft
Q = discharge rate, cu ft/sec
V = velocity of approach, ft/sec
H′ = head correction per Table O-1

Table O-1
Head Correction for Velocity of Approach

V	0.4	0.6	0.8	1.0	1.2	1.4	1.6	1.8	2.0
H′	0.002	0.005	0.01	0.015	0.023	0.03	0.04	0.05	0.062
V	2.2	2.4	2.6	2.8	3.0	3.2	3.4	3.6	3.8
H′	0.075	0.089	0.105	0.122	0.14	0.15	0.179	0.201	0.213

Calculations

Discharge, Q

- For a full-length weir (Case 1)

  $Q = 3.33b(1.5\,H)$

- For a contracted weir (Case 2)

  $Q = 3.33b(1.5\,H)$

- For a V-notch weir (Case 3)

  $Q = 6.33\,H$

- For a Cippoletti weir (Case 4)

  $Q = 3.367b(1.5\,H)$

Notes

1. Assumes troughs are level

Case 1: Full-Width Weir

V = 1–2 ft/sec at 4 H upstream

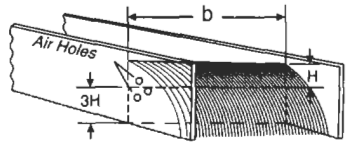

Case 2: Contracted Weir

V = 1–2 ft/sec at 3 H upstream

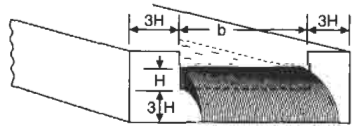

Case 3: V-Notch Weir

V = .5 ft/sec at 5 H upstream

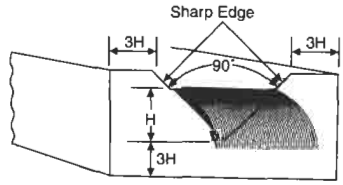

Case 4: Cippoletti Weir

V = 1–2 ft/sec at 4 H upstream

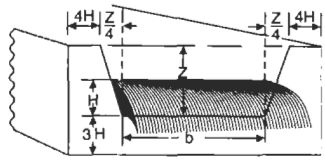

APPENDIX P

TIME REQUIRED TO DRAIN VESSELS

Notation

q = discharge rate, cu ft/sec
g = acceleration due to gravity, ft/sec
D = diameter of vessel, ft
R = radius of sphere, ft
L = length of horizontal vessel, ft
H = height of liquid in vessel, ft
d = diameter of drain, in.
c = coefficient of discharge
T = time to drain, min

Notes

1. It is assumed that the flow has a Reynolds number greater than 1000.

General Equation.

$$q = dc\sqrt{2gH}$$

- *For sphere.*

$$T = \frac{R^{2.5}}{d^2}$$

- *For horizontal vessel.*

$$T = 2.4\left(\frac{L \cdot D^{1.5}}{d^2}\right)$$

- *For vertical vessels.*

$$T = D^2\sqrt{\frac{H}{D^2}}$$

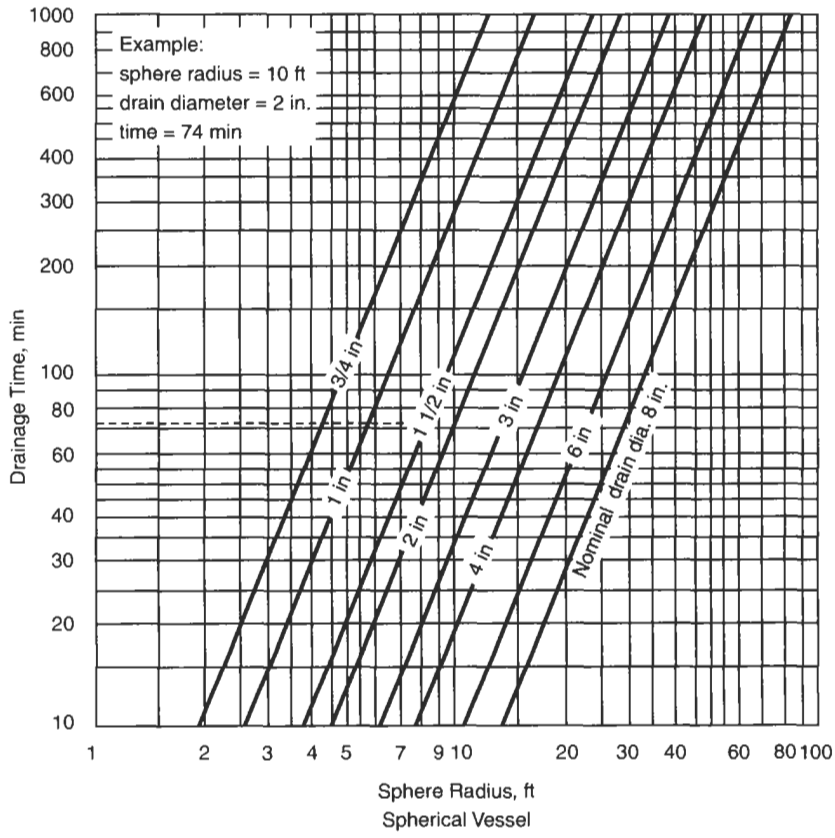

Source: Ray Elshout, Union Oil Co, Brea, CA. Reprinted by permission of Gulf Publishing Co.

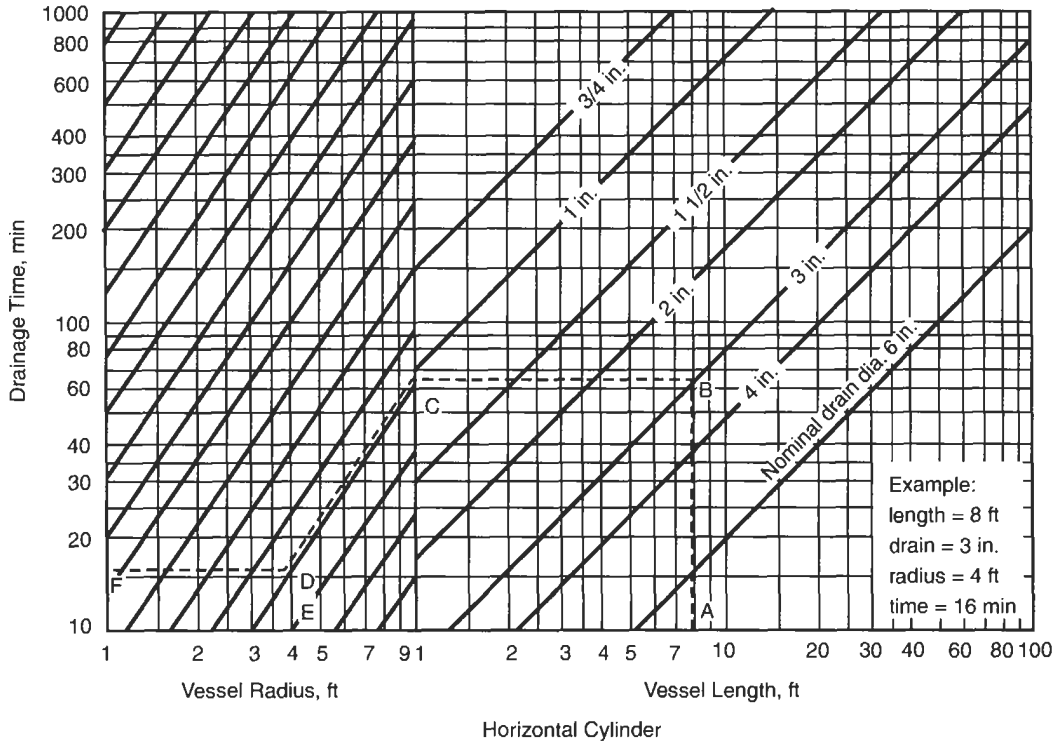

Horizontal Cylinder

Reprinted by permission of Gulf Publishing Co.

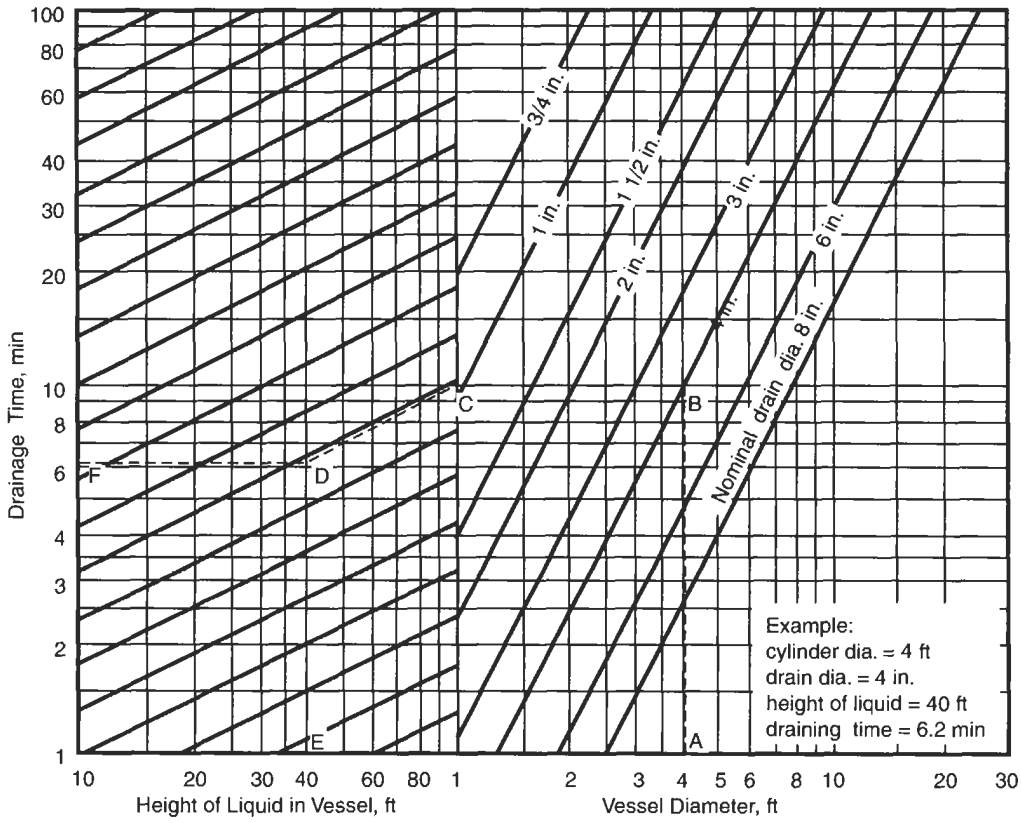

Vertical Cylinder

Reprinted by permission of Gulf Publishing Co.

APPENDIX Q
VESSEL SURGE CAPACITIES AND HOLD-UP TIMES

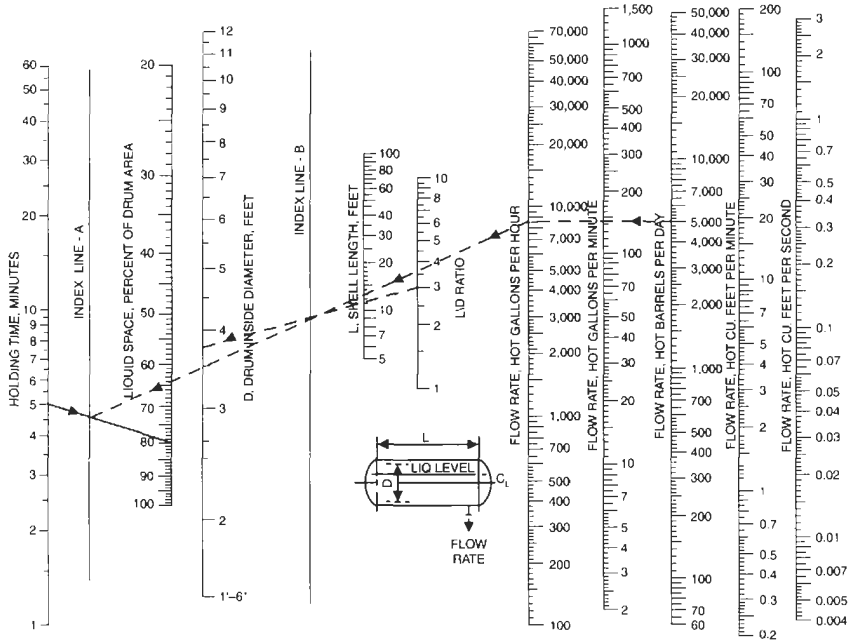

Figure Q-1. Nomograph to find drum size for holding time. Reprinted by permission of Gulf Publishing Co.

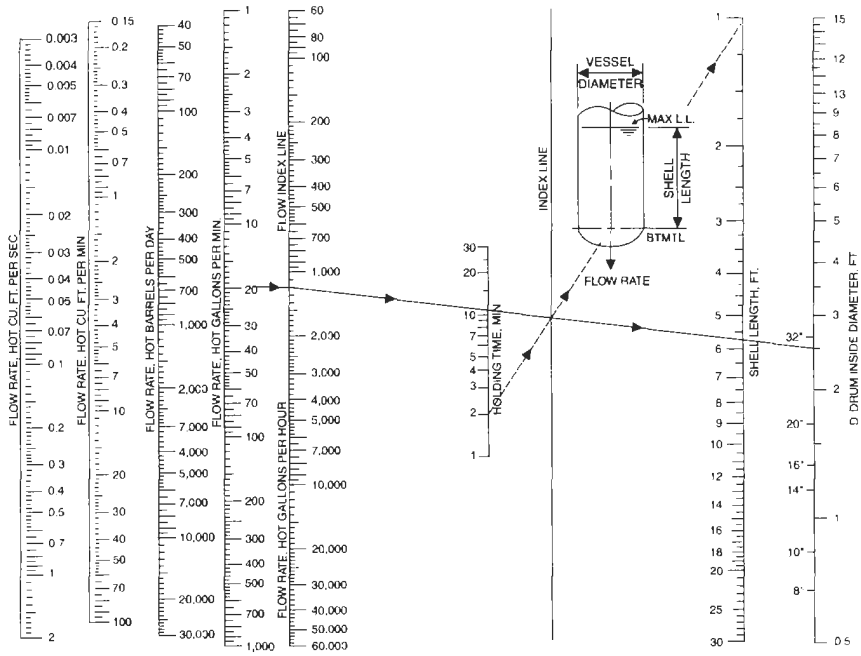

Figure Q-2. Nomograph to find shell length for desired holding time. Reprinted by permission of Gulf Publishing Co.

APPENDIX R

MINOR DEFECT EVALUATION PROCEDURE

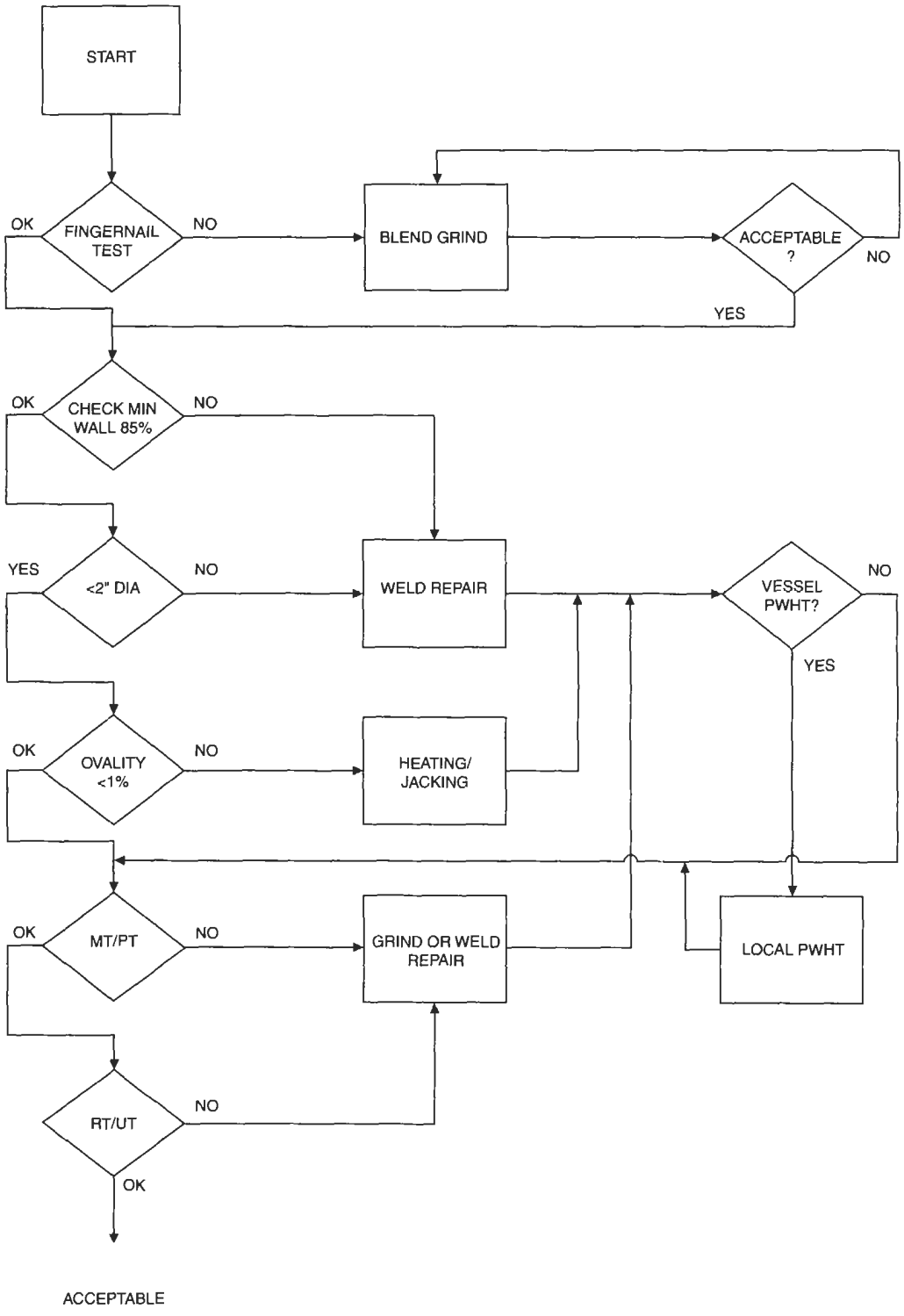

REFERENCES

1. Roark, R.J., *Formulas for Stress and Strain*, 5th Edition, McGraw-Hill Book Co., 1975.
2. ASME Code, Section VIII, Div. 2, Para, AF712.

Index

A

Agitation, defined, 328
Agitators, helical pipe coils with, 341
AISC Steel Construction Manual, 109, 110
Anchor bolts, base details and
  equivalent area method, 195–196
  force, 201
  number of, 194, 200
Anchoring of saddle supports, 111
  Anchor-type impellers, 329, 332
Angle α, calculating, 34
  ASCE, wind design per, 112–117
ASME (American Society of Mechanical Engineers)
  Division 1 versus Division 2, 7
  Section VIII, Division 1, 443–444
  STS-1 method, 251
Attachments, converting, 267–269
AWWA D-100, 86, 87, 88, 89
Axial stress, 67

B

Baffles
  applications, 227
  configurations, types of, 236
  curved, 227
  dimensions, 228–229
  do's and don'ts for attaching stiffeners, 230
  equations, 229
  flexible design for full cross-section, 235
  helical pipe coils with, 341
  for mixers/agitators, 328, 331
  notation, 228
  sample problem, 232–234
  stiffened versus unstiffened, 227
  stiffener design, 230–231
  thermal check, 230
  unstiffened, check, 230
  weld sizes, 231–232
  widths and wall clearances, 328
Barge transportation. *See* Transportation, barge
Bar stiffeners, moment of inertia of, 26
Base details for vertical vessels, design of
  anchor bolts, equivalent area method, 195--196
  anchor bolts, force, 201
  anchor bolts, number of, 194, 200
  base plate, 197, 201
  bending moment, 194
  bolt chair data, 194
  bolt stress, allowable, 194
  concrete properties, 194
  constants, 194
  gussets, 198
  notation, 192, 200
  skirt thickness, 199
  skirt types, 193
  stresses, allowable, 200–201
  top plate or ring, 198
Base plate designs, 406–407
  for legs, 184–188
  for lugs, 190, 425
  for saddles, 181
  weights of, 104
Base support damping, 244
Beam on elastic foundation methods, 255
Beams
  See also Support of internal beds
  multiple loads, 308
  tail, 406–407
Bending moment, 67
Bending stress
  primary general, 8, 67
  secondary, 9
Biaxial states of stress, 3
Bijlaard, P. P., 111
  analysis, 255, 269–290
Bins
  compression ring design, 323
  deep, granular/powder, 322
  deep versus shallow, 320
  dimensional data, 319
  material properties, 326
  notation, 318–319
  purging techniques, effects of, 327

Bins (*Continued*)
Rankine factors, 326–327
roofs, 327
shallow, granular/powder, 321
small internal pressures, 323
solids versus liquids in, 318
struts, 324
support arrangements, 324–325
surcharge, 327
weights, 319
Blind flanges, with openings, 58
Bolster loads, 371–372
Bolted connections, shear loads in, 317–318
Bolts
check of, 426
flange, 52, 53, 54–55, 421, 424, 426
loads for rectangular, 424
properties, 421
weights of alloy stud, 103
Bolt torque, for sealing flanges, 59–62
Braces, leg, 110
See also Legs, seismic design for braced
Brackets
cantilever-type, 313
circular platforms and
spacing of, 303
high-temperature, 312
types of, 309
Brittle fractures, 5
Buckling
defined, 85
elastic, 85
general, 85
local, 85
Buckling of thin-walled cylindrical shells
allowable, 87–89
critical length, load, and stress, 85
internal or external pressure, effects of, 85, 87
local buckling equations, comparison of, 86
safety factor, 87
stiffening rings, 87

C

Carbon steel plate, weights of, 97
Center of gravity, finding or revising, 80
Choker (cinch) lift at base, 413
Circular platforms
bracket spacing, 303
dead loads, 303
dimensions, 296–297
Circular platforms (*Continued*)
formulas, 297
kneebrace design, 298, 303
live loads, 300–301, 303
moment at shell graph, 299
notation, 296
Circular rings, stress in
allowable stress, 258
coefficient graphs, 264
coefficient values, 260–263
moment diagrams, 256
moments and forces, determining, 259–265
notation, 256–257
radial load, determining, 257
shell stress due to loadings, 258
Circumferential/latitudinal stress, 2
formula, 16
Circumferential ring stiffeners, stress and, 216–219
Clips, 308
Coils. *See* Helical pipe coils
Coil wrapped thick-walled pressure vessel, 11
Collapse, use of term, 85
Columns. *See* Leg supports
Composite stiffeners
baffles and, 227
moment of inertia of, 27
Compression plate, 190–191
Compression ring design, bins and elevated tanks and, 323
Cone-cylinder intersections
dimensions and forces, 209
example, 211
forces and stresses, computing, 210, 212
notation, 208
reinforcement at large end with external pressure, 214–215
reinforcement at large end with internal pressure, 213
reinforcement at small end with external pressure, 215–216
reinforcement at small end with internal pressure, 213–214
Cone lifting lugs, 416–419
Cones, formula, 16
Corrosion
fatigue, 5
stress, 5
Creep deformation, 5
Critical force, 85
Critical length, 85
Critical load, 85
Critical stress, 85
Critical wind velocity, 244, 246, 249

Cross braces, 110
Cylinders
  See also Cone-cylinder intersections
  calculating proportions, 92
Cylindrical shells, 11
  buckling of thin-walled, 85–89
  external pressure design for, 20
  formulas, 15, 88
Cylindrical shells, stress in
  bending moment, 278, 280, 282
  calculating β values for rectangular attachments, 272–274
  calculation steps, 272
  circumferential moment, 273–274, 275
  concentration factors, 270
  dimensions for clips and attachments, 270
  geometric paramenters, 271–272
  longitudinal moment, 273, 275
  membrane force, 277, 279, 281
  notation, 269
  radial load, 272
  shear stress, 274–272

D

Damping
  β values, 248
  coefficient and topographic factors, 249
  data, 250
  design criteria, 245
  design modifications, 245
  equations, 250
  factor, 244
  graph of critical wind velocity, 249
  precautions, 246
  procedures and examples, 251–253
  summary of, 247
  types of, 244–245
Data sheet, sample, 444
Davits
  arrangement, 295
  moments and forces, 292
  notation, 291
  radial load, 293–294
  selection guide, 292
  stress in, 292–293, 296
  types of rigging, 291
Dean effect, 336
Defect evaluation, minor, 486
Deflection
  dynamic, 246
  static, 246
  tower, 219–221
Density of various materials, 104
Design
  failure, 5
  pressure, 29
  temperature, maximum, 29
Discontinuity stress, 9, 12–13
Dished heads. *See* Torispherical heads
Displacement method, 13
Displacements, radial, 217
Double eddy, 336
Downcomer bars, weights of, 101
Draining vessels, time required for, 483–484
Drums
  calculating L/D ratio, 89–90
  sizing of, 89
  types of, 89
Dynamic deflection, 246
Dynamic instability, 244

E

Elastic buckling, 85
Elastic deformation, 5
Elasticity, modulus of, 60, 61
Ellipsoidal heads
  internal pressure and, 30, 31
  proportions, calculating, 92
  Elliptical heads, reinforcement for openings in, 74
Elliptical openings, reinforcement for, 74
Empty weight, 95
Energy absorbed by shell, 244
Erection
  design steps, 388
  flanges, top body, 397
  guidelines, 387–388
  of horizontal vessels, 394
  lifting attachments, types of, 391
  lifting loads and forces, 400–405
  local loads in shell due to, 434–436
  lugs, dimensions and forces of, 399
  lugs, shell flange, 397
  lugs, side, 395–396
  methods, 387, 441
  notation, 390
  rigging terminology, 398
  stresses, allowable, 388–389

Erection (*Continued*)
tailing devices, 393, 397
trunnions, 392, 397
of vessels on legs, 394
weight, 95
Euler, 85
External pressure
buckling and, 85, 87
for cylindrical shells, 20
dimensional data for cones due to, 36
for intermediate heads, 32–33
openings and, 75
for spheres and heads, 22, 24–25
stiffeners, combining vacuum with other types, 19–20
stiffeners, location of, 19
stiffeners, moment of inertia of bar, 26
stiffeners, moment of inertia of composite, 27
stiffening rings, check for external pressure, 28
stiffening rings, moment of inertia of, 27
unstiffened shells, maximum length of, 25
External restraint, 12

F

Fabricated weight, 95
Fabrication failure, 5
Failures
categories of, 5
types of, 5
Fatigue, 5
analysis, 13
Finite element analysis, 255
Flanged heads. *See* Torispherical heads
Flanges
See also Lugs, flange
blind, with openings, 58
bolts, 52, 53, 54–55
bolt torque for sealing, 59–62
coefficients, table of, 47–49
erection utilizing top body, 397
formulas, 38–39
gasket facing and selection, 39
gasket materials and contact facings, 45
gasket widths, 46
high-pressure, 39
hub stress correction factor, 51
integral factors, 50, 52
loose hub factors, 51, 52
low-pressure, 39
maximum allowable pressure for, 56
Flanges (*Continued*)
notation, 37
pressure-temperature ratings for, 53
reverse design, 43
ring design, 42
slip-on (flat face, full gasket) design, 44
slip-on (loose) design, 41
special, 39
steps for designing, 39
weights of, 98–99
weld neck (integral) design, 40, 96
Flat heads
examples, 63–67
formulas, 63
large openings in, 78–80
notation, 62–63
openings in, 74
stress in, 67
Flat plates, 478–479
Force method, 13
Formulas
for calculating weights, 96
for cylinders, 15, 88
dimensional, 35
flanges, designing, 38–39
flat heads, designing, 63
general vessel, 15–16, 459–463
Minimum Design Metal Temperature (MDMT), 82
stress factors, 38–39, 78
torispherical and ellipsoidal head, for stress, 31
Friction factor, 61

G

Gaskets
facing and selection, 39
material, modulus of elasticity, 61
materials and contact facings, 45
widths, 46
General buckling, 85
General loads, 6, 7
Geometry factors, 78
Gussets, 189, 198

H

Handling operations, 437
Heads
external pressure design for hemispherical, 22, 24–25

Heads (*Continued*)
flat, 62–67, 78–80
formula, 16
intermediate, 31–33
internal pressure and ellipsoidal, 30, 31
internal pressure and torispherical, 30, 31
properties of, 447
Heat transfer coefficient, 336, 352–353
Helical pipe coils
advantages of, 335
baffles and agitators, 341
calculations, 342–344
data, 348
design requirements, 335–336
design tips, 336–337
examples, 344–354
film coefficients, 348
gases, properties of, 348
heat loss, 351
heat transfer coefficient, 336, 352–353
layout for flat-bottom tanks, 339
liquids, properties of, 350
manufacturing methods, 335
metal conductivity, effect of, 353
metals, thermal conductivity of, 349
notation, 341
physical design, 335
pressure drop, 336, 344
Reynolds number, 336, 339, 343–344
steam and water, properties of, 350
steam and water, viscosity of, 351
supports for, 340
thermal design, 335
types of, 338
water and liquid petroleum products, viscosity of, 354
Hemispherical heads, external pressure and, 22, 24–25
Holding times, 485
Horizontal vessels
See also Saddles, horizontal vessels and design of
erection of, 394
partial volumes of, 452–454
platform splice, 306
platforms for, 305
walkways or continuous platforms for, 306
Hot box design, 109
Hydrostatic end forces, 79

I

Impact testing, avoiding, 81
Impellers
action of, 334
types of, 329, 332
Incremental collapse, 5
Insulation, external, 480–481
Intermediate columns, 85
Intermediate heads
external pressure and head thickness, 32–33
internal pressure and head thickness, 31–32
methods of attachment, 32
shear stress, 33
Internal force, 67
Internal pressure
buckling and, 85, 87
for ellipsoidal heads, 30, 31
for intermediate heads, 31
for torispherical heads, 30, 31
Internal restraint, 12

J

Joint efficiencies, 445–446

K

Kneebraced design
circular platforms, 298, 303
pipe supports, 311, 314
Knuckle radius, thickness required, 35, 36, 37

L

Ladder and platform (L&P) estimating, 105
Large-diameter nozzle openings, 203–207
L/D ratio, 89–90
Legs, erection of vessels with, 394
Legs, seismic design for braced
calculations, 135–136
dimensional data, 133
flow chart for, 138
legs and cross-bracing, sizes for, 137
load diagrams, 134
loads, summary of, 136
notation, 132
Legs, seismic design for unbraced
calculations, 127–129

Legs, seismic design for unbraced (*Continued*)
dimensional data, 126
leg configurations, 126
leg sizing chart, 131
notation, 125
vertical load, 130
Leg supports, 109–110
base plates for, 184–188
Length
critical, 85
vessel, 449–450
Lifting. *See* Erection
Ligaments, 75
Loads, 6–7
critical, 85
lifting, 400–405
on wire rope, 438
Local buckling
defined, 85
equations, comparison of, 86
Local loads, 6, 7
analysis method, 111
attachments, converting, 267–269
methods for analyzing, 255
methods for reducing shell stress, 256
ring stiffeners, partial, 265–267
in shell due to erection forces, 434–436
stress in circular rings, 256–265
stress in cylindrical shells, 269–283
stress in spherical shells, 283–290
Local primary membrane stress, 8–9
Logarithmic decrement, 246, 247
Longitudinal/meridional stress, 2
formula, 16
Lubricating bolts, 61
Lugs, 111
dimensions and forces, 399
shell flange, 397
side, 395–396
tailing, 414–415
top head and cone lifting, 416–419
Lugs, design of
base plate, 190
compression plate, 190–191
dimensions, standard, 191
gussets, 189
notation, 188
Lugs, flange
base plate design, 425
bolt loads for rectangular, 424
bolt properties, 421
Lugs, flange (*Continued*)
bolts, check of, 426
design steps, 423
diagram, 420
dimensions, 421
full circular base plate design, 424
loads, 435–436
nozzle flange check, 423
sample problem for top, 427–430
side, 422, 435, 436
tension, maximum, 423
top, 422, 435–436
Lugs, seismic design for
bending moment equation, 148
β values, computing equivalent, 152, 155
coefficients, 153
dimensional data, 151
forces and moments, 145–146, 152
four-lug system, 149
geometric parameters, computing, 152, 154
notation, 145, 151
radial loads, 147, 154, 155
reinforcing pads, use of, 154–157
stress diagrams, 150
stresses, 146, 153, 156
two-lug system, 149

M

Manways, weights of, 100
Material
failure, 5
properties, 466–473
selection guide, 464
Maximum Allowable Pressure (MAP)
calculating, 29
defined, 29
for flanges, 56
Maximum Allowable Working Pressure (MAWP)
calculating, 29
defined, 28–29
for flanges, 53
Maximum shear stress theory, 3–5
Maximum stress theory, 2–3, 4–5
Membrane stress
local primary, 8–9
primary general, 8
secondary, 9
Membrane stress analysis, 2
Metric conversions, 474

Minimum Design Metal Temperature (MDMT)
arbitrary, 81
design temperature and, 29
determining, 82
exemption, 81, 83
flow chart for, 84
formulas, 82
notation, 81
test, 81
Mixers
applications, 328, 333
baffles, 328, 331
impellers, action of, 334
impellers, types of, 329, 332
mounting, 328, 330, 331
notation, 330
Mixing, defined, 328
Moment coefficients for base rings, 411–412
Moment of inertia
of bar stiffeners, 26
calculation form, 207
of composite stiffeners, 27
of stiffening rings, 27
Moments, calculating, 79
Multilayer autofiettage thick-walled pressure vessel, 10–11
Multilayer thick-walled pressure vessel, 10
Multiwall thick-walled pressure vessel, 10

N

National Building Code (NBC), 251–252
Nonsteady loads, 6, 7
Nozzle reinforcement, 74–77
for large-diameter openings, 203–207
Nozzles, weights of, 100

O

Obround openings, reinforcement for, 74
Openings
in elliptical heads, 74
external pressure and, 75
in flat heads, 75, 78–80
large-diameter nozzle, 203–207
multiple, 75
near seams, 75
through seams, 75
in torispherical heads, 74
Operating pressure, 29
Operating temperature, 29
Operating weight, 95
Overweight percentage, 95

P

Paddle-type impellers, 329
Peak stress, 9
Pipe coils. *See* Helical pipe coils
Pipes, weights of, 102
Pipe supports
alternate-type, 315
brackets, cantilever-type, 313
brackets, high-temperature, 312
brackets, types of, 309
design of, 309–316
dimensions, 309
kneebraced, 311, 314
unbraced, 309
weight of, 310
Plastic deformation, excessive, 5
Plastic instability, 5
Plate overage, 95
Posts. *See* Leg supports
Pressure
See also External pressure; Internal pressure
design, 29
drop and design of helical pipe coils, 336, 344
operating, 29
Primary stress
bending, 67
general, 8
local, 8–9
Propeller-type impellers, 329
PWHT, requirements for, 465

R

Radial displacements, 217
Radial stress, 2
Rail transportation. *See* Transportation, rail
Rankine factors, 326–327
Rectangular platforms, 304–308
Refractory linings
calculations, 239–241
creep rate, 237
failures and hot spots, causes of, 237
flow chart, 243
hot versus cold face, 237

Refractory linings (*Continued*)
properties and data, 238–239
properties of materials, 241
shrinkage, 237
stresses, allowable, 237
summary of results, 242
Reinforcement
nozzle, 74–77, 203–205
for studding outlets, 68
Reinforcement, cone-cylinder intersections and
at large end with external pressure, 214–215
at large end with internal pressure, 213
at small end with external pressure, 215–216
at small end with internal pressure, 213–214
Relaxation of joints, 62
Resistance, 244
Reynolds number, 336, 339, 343–344
Rigging, terminology, 398
Ring(s)
See also Circular rings; Stiffening rings
analysis, 111, 255, 256–265
compression, 323
supports, 111–112
Ring girders
bending moments, internal, 223
design check for base, 408
design steps, 225–226
dimensions and forces, 222
formulas, 223
load diagrams, 224
notation, 222–223
Rings, seismic design for
calculations, 142–144
coefficients, 141–142
maximum bending moments, 144
notation, 140
thickness, determining, 144
Roak Technical Note #806, 255, 257–269

S

Saddle(s)
See also Transportation, shipping saddles
supports, 110–111
weights of, 104
Saddles, horizontal vessels and design of
circumferential bending, 173
circumferential compression, 173
coefficients, 174–175
dimensional data, 166
dimensions for saddles, 176
Saddles, horizontal vessels and design of (*Continued*)
longitudinal bending, 172
longitudinal forces, 168
moment diagram, 167
notation, 166
procedure for locating, 170
stress diagram, 167
stresses, shell, 172–173
stresses, types and allowable, 170
tangential shear, 172–173
transverse load, 169
wind and seismic forces, 171–172
Saddles, large vessels and design of
anchor bolts, 182
base plate designs, 181
dimensional data, 178
forces and loads, 179–180
notation, 177, 179
rib design, 183–184
web design, 180
Safety factor, buckling, 87
Seams
openings near, 75
openings through, 75
pads over, 75
Secondary stress, 9
Service failure, 5
Seismic design for vessels
on braced legs, 132–139
coefficient tables, 123
general, 120–125
on lugs, 145–157
near-source factor, 123
on rings, 140–144
risk map, 122
on skirts, 157–165
soil profile types, 123
source type, 123
on unbraced legs, 125–131
vibration periods, 124
Shackles, steel, 439
Shear loads, in bolted connections, 317–318
Shear stress, intermediate heads and, 33
Shells
See also under type of
thickness, required, 17–18
Shipping saddles. *See* Transportation, shipping saddles
Shipping weight, 95
Short columns, 85
Sign convention, 265
Skirts, design of, 406–407, 409

Skirts, seismic design for
dimensional data, 158
longitudinal stresses, 164–165
nonuniform vessels, 158–163
notation, 157
uniform vessels, 158
Skirt supports, 109
See also Base details for vertical vessels, design of
Slenderness ratio method, 85
Spheres, external pressure design for, 22, 24–25
Spheres, field-fabricated
accessories, 356
advantages of, 355
applications, 355
codes of construction, 355
conversion factors, 357
dimensional data, 358, 359, 361
fabrication methods, 356
formulas, 357
heat treatment, 355–356
hydrotests, 356
leg attachment, 358
liquid levels, 358
materials of construction, 355
notation, 357
sizes and thicknesses, 355
supports for, 355
types of, 360
weights, 362, 363
Spherical dished covers, 57
Spherical shells, 11
formula, 15
Spherical shells, stress in
calculation steps, 284
formulas, 284
notation, 283
stress indices, loads, and geometric parameters, 284–290
Square platforms, 304–308
Stacks, vibration, 244–253
Stainless steel sheet, weights of, 97
Static deflection, 246
Steady loads, 6, 7
Stiffeners
combining vacuum with other types, 19–20
composite, 27, 227
location of, 19
moment of inertia of bar, 26
moment of inertia of composite, 27
Stiffening rings
buckling and, 87
check for external pressure, 28
Stiffening rings (*Continued*)
moment coefficients for base, 411–412
moment of inertia of, 27
partial, 265–267
size base, 410
stress at circumferential, 216–219
Strain, 5
Strain-energy concepts, 111
Strain-induced stress, 9
Stress
See also under category and type of
allowable, 475–477
analysis, 1–2
categories of, 9–10
circumferential/latitudinal, 2
classes of, 8–9
corrosion, 5
critical, 85
in flat heads, 67, 79
formula factors, 38–39, 78
in heads due to internal pressure, 30–31
intensity, 4
longitudinal/meridional, 2
radial, 2
redistribution, 2
types of, 8
Stress theories
comparison of, 4–5
maximum, 2–3
maximum shear, 3–4
Struts, 324
Studding outlets, 68
Stud tensioners, 61
Superposition, principle of, 268
Support of internal beds
applications, 69
beam seat support, 72
clip support, 72
double beam, 71, 73
forces and moments, summary of, 73
grating, 73
load on circular ring, 73
methods of, 69
notation, 69
single beam, 70, 73
Supports
See also Pipe supports
base details for vertical vessels, design of, 192–202
base plates for legs, 184–188
for bins and elevated tanks, 324–325

Supports (*Continued*)
coils, 340
leg, 109–110, 188–191
lugs, 111
ring, 111–112
saddle, 110–111
saddles, design for large vessels, 177–184
saddles, design of horizontal vessel on, 166–177
seismic design for vessels, 120–125
seismic design for vessels on braced legs, 132–139
seismic design for vessels on lugs, 145–157
seismic design for vessels on rings, 140–144
seismic design for vessels on skirts, 157–165
seismic design for vessels on unbraced legs, 125–131
skirt, 109
spheres, 355
wind design per ASCE, 112–117
wind design per UBC-97, 118–119
Surge capacities, 485
Sway braces, 110

T

Tail beams, 406–407, 409
Tailing devices, 393, 397
Tailing lugs, 414–415
Tanks, elevated
See also Bins
dimensional data, 319
liquid-filled, 320–321
small internal pressures, 323
support arrangements, 325
Temperature
See also Minimum Design Metal Temperature (MDMT)
maximum design, 29
operating, 29
Test weight, 95
Thermal gradients, 12
Thermal stress, 11–12
Thermal stress ratcheting, 12
Thick-walled pressure vessels, 10–11
Thinning allowance, 95, 101
Thin-walled cylindrical shells. *See* Buckling of thin-walled cylindrical shells
Tie rods, 110
Toe angle, 306
Top head lugs, 416–419
Toriconical transitions, dimensional data and formulas, 33–35
due to external pressure, 36
for large end, 35
for small end, 35–36
Torispherical heads
internal pressure and, 30, 31
reinforcement for openings in, 74
Torque, for sealing flanges, 59–62
Tower
deflection, 219–221
vibration, 244–253
Transportation
forces, 365, 378
lashing, 366, 381
load diagrams for moments and forces, 384–385
methods, 367
organizations involved in, 366
site descriptions, 441
stresses, checking, 386
stresses, determining, 366
Transportation, barge
directions of ship motions, 375
forces, 373
pitch and roll, 374
Transportation, rail
bolster loads, 371–372
capacity ratios for loads, 370
clearances, 369
forces on, 376
multiple car loading details, 369
special factors, 366–367
types of cars, 368
Transportation, shipping saddles
construction methods, 379–380
guidelines for, 365–366
tension bands on, 382–383
Transportation, truck
examples of, 377
forces on, 376
Tray supports, weights of, 101
Triaxial states of stress, 3
Trunnions, 392
design of, 431–433
loads, 434
tailing, 397
Turbines, 329, 332
Turnbuckles, 110
2/3 rule, 203

U

Unbraced legs, seismic design for. *See* Legs, seismic design for unbraced
Uniform Building Code (UBC), wind design per, 118–119
Unstiffened shells, maximum length of, 25

V

Valve trays, weights of, 101
Vertical vessels
See also Base details for vertical vessels, design of platforms for, 304
Vessel proportions
calculating, 89–94
volumes and surface areas, 448–454
Vessels
classification of, 455
parts of, 455–458
types of, 455
Vibration, towers and stacks and, 244–253
Volumes and surface areas, 448–454
Vortex shedding, 244
design modifications to eliminate, 245

W

Weights
allowance for plate overages, 95, 97
of bolts, alloy stud, 103
of carbon steel plate and stainless steel sheet, 97
estimating, 95–106
of flanges, 98–99
formulas for, 96
methods for, 95
of nozzles and manways, 100
of pipes, 102
of saddles and baseplates, 104
thinning allowance, 95, 101
of tray supports and downcomer bars, 101
of valve trays, 101
of weld neck flange, 96
Weights, types of
empty, 95
erection, 95
fabricated, 95
Weights, types of (*Continued*)
operating, 95
shipping, 95
test, 95
Weirs, flow over, 482
Welding
checking, 417–418
leg supports, 110
lug, 417–418
pad eye, 418
re-pad, 418
saddle supports, 111
skirt supports, 109
Welding Research Council (WRC) Bulletin #107, 255
Weld neck (integral) flanges, 40, 96
Wind design per ASCE
application of wind forces, 117
exposure categories, 116
gust factor, determining, 113
notation, 112
sample problem, 114
steps for, 113
structure categories, 116
table and map for wind speed, 115
Wind design per UBC-97, 118–119
Wind velocity, critical, 244, 246, 249
Wire wrapped thick-walled pressure vessel, 11
Wolosewick, F. E., 111
WRC Bulletin 107, 111

X

X-ray, requirements for, 465

Y

Yield criteria. *See* Stress theories

Z

Zick, L. P., 110
Zick's analysis, 110, 175, 366
Zick's stresses, 110
Zorilla method, 245, 251

PRESSURE VESSEL DESIGN MANUAL

THIRD EDITION

Dennis Moss, *Fluor, California, USA*

- ASME standards and guidelines can be time consuming and difficult to understand. Avoid both problems with this expert guide.
- ASCE, UBC, and AISC codes and standards are also included throughout the text
- Hundreds of illustrations and visual aids make this the most comprehensive and easy-to-use manual on pressure vessels.
- All of the latest procedures and codes are included in this edition. Solve all your design issues with this handy guide.

Pressure Vessel Design Manual, Third Edition is an accumulation of procedures, methods, techniques, formulas, and data for use in the design and construction of pressure vessels and their respective parts. Written for engineers involved in the design, maintenance, troubleshooting, and manufacturing of pressure vessels, this volume has a wide range of applications for chemical, civil, and petroleum engineers. Any engineer who constructs, installs, or operates process facilities will find it a valuable manual filled with must-have information and guidelines.

Easy to use and readily applicable, ***Pressure Vessel Design Manual, Third Edition,*** provides the user with a logical step-by-step approach to the design of pressure vessels according to ASME (American Society of Mechanical Engineers) and other (ASCE, UBC, AISC) codes and standards, such as the the method for determining the Minimum Design Metal Temperature, an ASME requirement for all pressure vessels. Not just a reference, this comprehensive volume is a practical guideline, using hundreds of illustrative figures, that helps designers and engineers solve practically every possible design problem.

ABOUT THE AUTHOR

Dennis Moss has more than 30 years' experience in the design, manufacture, and inspection of pressure vessels. He currently is a technical Director and Fellow for Fluor's Vessel Engineering Group.

REVIEWS FOR THE PREVIOUS EDITION

"It offers methods that are easy to apply yet flexible enough to accommodate code changes or contract requirements."
—Mechanical Engineering

"...a dependable, thorough, and complete reference volume, which will help eliminate time-consuming method searches...a book which demonstrates the adept writing ability of the author. I enthusiastically recommend the book to engineering libraries and all those involved in the design of pressure vesels and associated equipment."
—Applied Mechanics Reviews Vol. 41, No. 8

"...a first-rate compilation of relevant procedures and is highly recommended for university and special libraries."
—Donald G. Frank, Oryx Starr

"Each procedure is detailed enough to size all welds, bolts, and plate thicknesses and to determine actual stresses."
—Gas Abstracts

"...well illustrated, easy-to-use format."
—ASHRAE Journal

RELATED TITLES

Pipeline Rules of Thumb, 5th Edition
E.W. McAllister
ISBN 0-7506-7471-7, Paperback

Rules of Thumb for Chemical Engineers, 3rd Edition
Carl R. Branan
ISBN 0-7506-7567-5, Paperback

Pipe Drafting and Design, 2nd Edition
Roy Parisher and Robert Rhea
ISBN 0-7506-7439-3, Paperback

ISBN: 0-7506-7740-6





G P P
Gulf Professional Publishing
an imprint of Elsevier
www.gulfpp.com