3.
PROPERTIES AND SELECTION OF MATERIALS

3.1 GENERAL PROPERTIES AND SELECTION CRITERIA

Proper material selection for chemical and process equipment is one of the first important problems encountered by the designer. Among the many parameters that must be considered are structural strength specifications, heat resistance, corrosion resistance, physical properties, fabrication characteristics, composition and structure of material and cost.

The properties that materials must have for a particular application depend largely on the environment in which they are to be used in. Material selection begins from determination of equipment, operating conditions, temperature, pressure, and various components in the process.

No materials have properties that fulfill all requirements. For example, good heat conductivity is a desirable property for the fabrication of heat exchanger surfaces, but not for insulation purposes. Obviously, both positive and negative properties can coexist in a single material. A corrosion resistant material may be insufficient for heat resistance or mechanical strength. Strong materials may be too brittle, e.g., ferrosilicon. Also, materials that have good mechanical and chemical properties may be too expensive.

The initial cost of a material does not provide the entire economic picture. At first, strong materials that are expensive may be more favorable than less expensive ones. The cost of processing cheap materials is sometimes high, thus creating abnormally high fabrication costs. For example, the cost of a ton of granite is a dozen times cheaper than that of nickel chromium/molybdenum steel. However, granite absorption towers are more expensive than steel towers of the same volume because of the high costs associated with processing granite. Furthermore, granite towers are much heavier than the steel ones; therefore, they require stronger, and thus more expensive, foundations.

Because any material may be characterized by some desirable and nondesirable properties with respect to a specific application, the selection of materials is reduced to a reasonable compromise. In so doing, one strives to select materials so that properties correspond to the basic demands determined by the function and operating conditions of the equipment, tolerating some of the undesirable properties.

The basic requirement for materials intended for fabricating chemical apparatuses is mostly corrosion resistance because this determines the durability of equipment. Often, corrosion data are reported as a weight loss per unit of surface area per unit of time. It is easy to transfer from such data to the penetration rate using the following relation:

$$V = 8.76 \frac{G}{\rho} \text{ mm/yr} \tag{3.1}$$

where G = weight loss at uniform corrosion (kg/m^2 hr)
V = corrosion rate (mm/yr)
ρ = density of material (kg/dm^3)

Materials must have high chemical resistance as well as durability. For example, if the material dissolves in the product, the product quality may deteriorate, or materials may act as catalysts promoting side reactions and thus decreasing the yield of the primary product. Usually there are several materials suitable for use under the process conditions. In such cases the material is selected by additional considerations. For example, if a vessel must be equipped with a sight glass, the material for fabricating this item must be transparent and safe. In this case, plexiglas may be used if the vessel operates at low temperatures. For higher temperatures, glass is used; however, glass is brittle and very sensitive to drastic temperature changes. Therefore, the accessories must be designed so that the glass could not be broken occasionally and the poisonous or aggressive liquid allowed to escape. In this application, double glasses or valves must be provided for an emergency to shut off the accessory from the working space of the vessel. Consequently, the poor construction property of glass may cause additional complications in the design. At very high temperatures sight glasses are made from mica. For high-pressure drops they are made from rock crystal (an excellent but very expensive material). An example is shown in Figure 3.1.

Gauges used for measuring the liquid level in vessels may be of semi-transparent and even nontransparent materials. Figure 3.2 illustrates a simple level gauge on a steel vessel used for liquid ammonia storage. As shown, a narrow strip of insulation is taken away from the vessel's shell to expose the bare metal. Consequently, the heat transfer coefficient from the

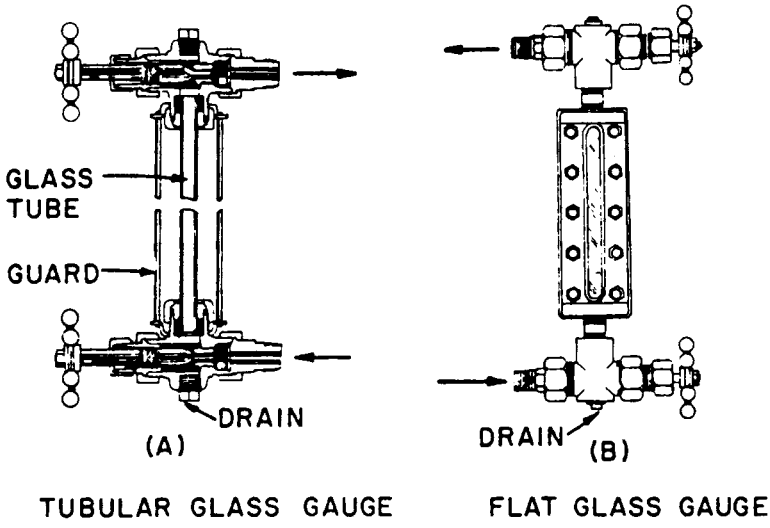

Figure 3.1. Typical glass sight gauges.

boiling ammonia is high, and the heat transfer coefficient from air to the wall is low. The wall temperature close to the liquid ammonia will be almost the same as that of ammonia, and the unprotected part of the vessel that is contacted with liquid will be covered with a layer of frost indicating the height of the liquid level.

Let us now consider the basic materials used in the fabrication of chemical equipment from the point of view of a designer. The principal construction materials for welded, forged and cast chemical vessels are: cast irons, gray cast iron, white cast iron, malleable cast irons, nodular cast iron, austenitic cast iron, high-silicon cast iron, low-carbon steels (mild steel), high-carbon steels, low-carbon/low-alloy steels, high-carbon/low-alloy steels, high-alloy steels (corrosion-resistant, heat resistant and high-temperature), nickel and nickel alloys. Each of these is described below.

3.2 PROPERTIES OF CAST IRONS

Three main factors that determine the properties of cast iron are:

1. the chemical composition of the cast iron,
2. the rate of cooling of the casting in the mold, and
3. the type of graphite formed.

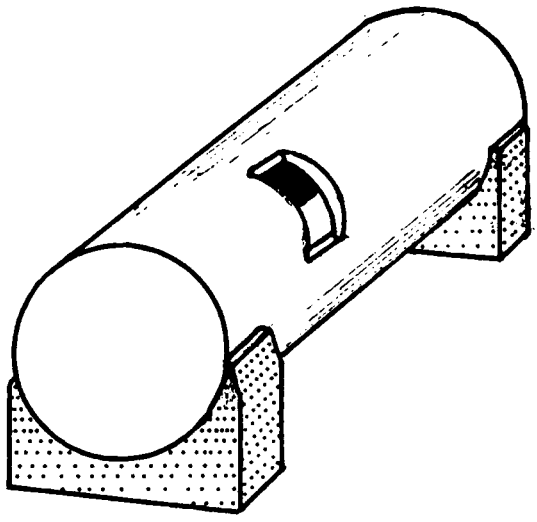

Figure 3.2. Liquid-level gauge for an ammonia tank.

Most commercial cast irons contain 2.5–4% carbon, and it is the occurrence of some of this carbon as free graphite in the matrix that is the characteristic feature of thin material. About 0.8–0.9% carbon is in a bound form as cementite (iron carbide).

The cast irons usually have a ferrite-pearlite structure, which determines its mechanical properties. The ferrite content determines the cast iron's viscosity, while the pearlite content determines its rigidity and strength.

Because cast iron has a carbon content approximately equivalent to its eutectic composition, it can be cast at lower temperatures than steel and flows more readily than steel because of its much narrower temperature solidification range. The presence of the graphite flakes in cast iron decreases its shrinkage on solidification much less than that of steel. These factors contribute to the fabrication of cast iron as sound castings in complex shapes and with accurate dimensions at low cost.

The physical properties of cast irons are characterized by the following data:

- density $\rho = 7.25$ kg/dm^3
- melting temperature $t_m = 1250 - 1280$°C
- heat capacity $C_p = 0.13$ kcal/kg°C
- heat conductivity $\lambda = 22 - 28$ kcal/m °C hr
- coefficient of linear expansion $\alpha = 11 \times 10^{-6}$

The cast irons do not possess ductility. They cannot be pressed or forged even while heated; however, their machining properties are considered good. Typical mechanical properties of various types of cast iron are given in Table 3.1.

3.2.1 Gray Cast Iron

Gray cast iron is the most commonly used cast iron and is the least expensive. It is the easiest to cast and machine. The tensile strength of gray cast iron ranges from 155 to 400 N/mm^2 (10 to 26 ton/in.^{2}). The tensile modulus ranges from 70 to 140 kN/mm^2 and the hardness from 130 to 300 DPN.

In nearly all standards for gray cast iron the grades are designated according to the tensile strength, not composition. In the British standard BS1452, for example, there are seven grades from 155 to 400 N/mm^2 (10 to 26 tonf/in.^{2}). This is the tensile strength measured on a test bar having a diameter of approximately 30 mm (1.2 in.). The actual strength of a casting will differ from that of the test bar according to the cross-sectional area (Table 3.2).

Castings are designed to be loaded in compression because the compressive strength of gray iron is about three times that of its tensile strength.

The recommended maximum design stress in tension is one-quarter the ultimate tensile strength (for cast irons a value up to 185 N/mm^2 (12 tonf/in.^{2})). The fatigue strength is one-half the tensile strength. Notched

Table 3.1. Typical Mechanical Properties of Various Types of Cast Iron [1]

Material	Specification	Tensile strength (tonf/in.^{2})	Tensile strength (N/mm^2)	Elongation (%)
Gray Cast Iron	BS1452 Grade 10	10	155	–
	14	14	215	–
	26	26	400	–
Nodular Cast Iron	BS2789 SNG 24/17	24	370	17
	32/7	32	500	7
	47/2	47	730	2
Malleable Cast Iron				
Blackheart	BS310 B290/6		290	6
	B340/12		340	12
Whiteheart	BS309 W340/3		340	3
	W410/4		410	4
Pearlite	BS3333 P440/7		440	7
	P540/5		540	5
	P690/2		690	2

Table 3.2. Typical Data Showing the Effect of Strength on Gray Iron Castings [1]

Gray iron to BS1452	Tensile strength, N/mm^2, of casting with section thickness of:				
	10 mm	20 mm	75 mm	100 mm	150 mm
Grade 20	350	280	280	230	220
14	230	200	150	140	120
12	200	170	120	110	110
10	170	140	110	90	75

specimens show the same value as unnotched specimens. For 220 N/mm^2 (14 tonf/in.^{2}) grades and above, the fatigue strength of unnotched specimens is approximately one-third the tensile strength. There is some notch sensitivity, although much less than is found in steel.

3.2.2 White Cast Iron

White cast iron is very hard (from 400 to 600 DPN) and brittle. All white cast irons are very difficult to machine and usually are finished by grinding. Table 3.3 gives properties of the four principal types of white cast irons.

3.2.3 Malleable Cast Irons

This type of cast iron is made by high-temperature heat treatment of white iron castings. The mechanical properties of malleable cast irons are given in Table 3.1; usually they are applied to the fabrication of conveyor chain links, pipe fittings and gears.

Table 3.3. Properties of White Iron [1]

	Unalloyed White Iron	Low-Alloy White Iron	Martensitic White Iron (Ni-hard)	High-Carbon, High-Chromium, White Iron
Composition (%)				
Carbon	3.5	2.6	3.0	2.8
Silicon	0.5	1.0	0.5	0.8
Nickel			3.5	–
Chromium		1.0	2.0	27
Hardness (DPN)	600	400	600	500
Tensile strength, (N/mm^2)	270	300	330	420

3.2.4 Nodular Cast Iron

Nodular cast iron (also referred to as ductile cast iron) is manufactured by inoculating the molten metal with magnesium or cesium. It is characterized by a homogeneous structure, higher than usual abrasion-resistance and strength for dynamic loads, and by easy machining. A wide variety of grades are available, with typical tensile strengths ranging from 380 to 700 N/mm^2 (25 to 40 tonf/in.^{2}), elongations from 17 to 2%, and hardness from 150 to 300 DPN (see Table 3.1). The tensile modulus is approximately 170 kN/mm^2. The design stress is half the 0.1% proof stress, and the fatigue design stress is one-third the fatigue limit. The nodular cast iron is used for many applications such as valves in pipelines for petroleum products, underground pipelines and so on.

3.2.5 Austenitic Cast Iron

Austenitic cast irons (either flake graphite irons or nodular graphite irons) are produced by mixing in nickel from 13–30%, chromium from 1–5% and copper from 0.5–7.5 (to lower nickel-containing grades to augment the corrosion resistance at lower cost).

The main advantages of austenitic cast irons are corrosion and heat resistance. For corrosion resistance, the flake and nodular are similar, but the mechanical properties of nodular cast irons are superior. Some of the commercially available austenitic cast irons are given in the Tables 3.4 and 3.5.

3.3 APPLICATION REQUIREMENTS OF CAST IRONS

3.3.1 Abrasion Resistance

The white cast irons and their low alloys have good abrasion resistance properties [2,3]. White cast irons are used for grinding balls, segments for mill liners and slurry pumps. In the ceramic industry they are used for muller tyres and augers; in the pulp and paper industry for attrition mill plates and chip feeders; and in the paint industry for balls for grinding pigments.

3.3.2 Corrosion Resistance

The corrosion resistance of unalloyed and low-alloy flake, nodular, malleable and white cast iron is comparable to mild- and low-alloy steel. However, these cast irons have a major advantage over steel; namely, greater cross section or wall thickness than steel. Consequently, they have a

Table 3.4. Properties of Spheroidal

BS3468 Designation	ASTM[a] A439 Designation	Trade Names	C (% max.)	Si (%)	Mn (%)
AUS202 Grade A	D-2	SG Ni-resist type D2	3.0	1.0 to 2.8	0.7 to 1.5
AUS202 Grade B	D-2b	SG Ni-resist type D2b	3.0	1.0 to 2.8	0.7 to 1.5
AUS203	D-2c	SG Ni-resist type D2c	3.0	1.0 to 2.8	1.8 to 2.4
–	ASTM A571		2.6	2.5	3.75 to 4.5
AUS204	–	SG Nicrosilal	3.0	4.5 to 5.5	1.0 to 1.5
AUS205	D-3	SG Ni-resist type D3	2.6	1.5 to 2.8	0.5 max.
–	D-4	SG Ni-resist type D4	2.6	5.0 to 6.0	1.0 max.
–	D-5	SG Ni-resist type D5, Minovar	2.4	1.0 to 2.8	1.0 max.

[a]There are slight differences between BSS and ASTM compositions.
[b]Properties in brackets are indicative, not mandatory.
[c]0.2% proof stress.

Table 3.5. Properties of Flake

BS3468 Designation	ASTM A436 Designation	Trade Names	C (% max.)	Si (%)	Mn (%)
AUS101 Grade 1	Type 1	Ni-resist type 1	3.0	1.0 to 2.8	1.0 to 1.15
AUS101 Grade B	Type 1b	Ni-resist type 1b	3.0	1.0 to 2.8	1.0 to 1.5
AUS102 Grade A	Type 2	Ni-resist type 2	3.0	1.0 to 2.8	1.0 to 1.5
AUS104	–	Nicrosilal	1.6 to 2.2	4.5 to 5.5	1.0 to 1.5
AUS105	Type 3	Ni-resist type 3	2.6	1.0 to 2.0	0.4 to 0.8
–	Type 4	Ni-resist type 4	2.6	5.0 to 6.0	0.4 to 0.8
–	Type 6		3.0	1.5 to 2.5	0.8 to 1.5

Graphite-Grade Cast Irons

Ni (%)	Cr (%)	UTS (N/mm^2 min.)	0.5% Proof Stress (N/mm^2 min.)	Elongation (% min.)	Hardness (HB)	Elastic Modulus (kN/mm^2)
1.80 to 22.0	1.0 to 2.5	370	230	8.0	201 max.	(115)[b]
18.0 to 22.0	2.0 to 3.5	370	230	6.0	205 max.	(151)
21.0 to 24.0	0.5 max.	370	230	20.0	170 max.	(110)
21.0 to 24.0	0.20 max.	430		30	170 max.	
18.0 to 22.0	1.0 to 2.5	370	230	10.0	230 max.	
28.0 to 32.0	2.5 to 3.5	370	230	7.0	201 max.	(110)
28.0 to 32.0	4.5 to 5.5	400			202–273	
34.0 to 36.0	0.10 max.	380	210[c]	20.0	131–185	

Graphite-Grade Cast Irons

Ni (%)	Cr (%)	Cu (%)	UTS (N/mm^2 min.)	Elongation (% min.)	Hardness (HB)	Elastic modulus (kN/mm^2)
13.5 to 17.5	1.0 to 2.5	5.5 to 7.5	140	2.0	212 max.	(90)
13.5 to 17.5	2.0 to 3.5	5.5 to 7.5	180	–	248 max.	(105)
18.0 to 22.0	1.0 to 2.5	0.5 max.	140		212 max.	(90)
18.0 to 22.0	1.8 to 4.5	0.5 max.	190	2.0	248 max.	(110)
28.0 to 32.0	2.5 to 3.5	0.5 max.	170	–	212 max.	(105)
29.0 to 32.0	4.5 to 5.5	0.5 max.	170	–	149–212	
18.0 to 22.0	1.0 to 2.0	3.5 to 5.5	170	–	124–174	

longer life, although they corrode at the same rates. For example, the corrosion rate for boiling concentrated sulfuric acid in large cast iron pots is very high, but a reasonable life is obtained by making the bottom of the pots three inches thick. Secondly, although the matrix of a cast iron pipe may rust, for example, the graphite network prevents disintegration of the pipe and permits its duty for a longer time than a steel pipe.

The austenitic cast irons are in widespread use in many industries (food, pharmaceutical, petroleum, chemical, petrochemical, pulp and paper, etc.) in mildly corrosive and erosive situations where the life of unalloyed or low-alloy cast iron or steel is short, but the high cost of stainless steel and nonferrous alloys cannot be justified.

Other austenitic cast iron applications can be found in food and dairy production, where the metallic contamination of the product must be eliminated.

3.3.3 Temperature Resistance

The persistent increase in volume of cast iron items in high-temperature situations becomes the limiting factor in the use of unalloyed cast irons, especially in flake graphite castings [4,5].

The addition in a casting of about 1% of chromium can control the growth in the temperature range from 400 to 600°C. Above 600°C, scaling due to surface oxidation becomes an undesirable phenomenon in the use of unalloyed cast irons. For achieving dimensional stability and long life, silal cast irons (containing 5.5–7% silicon) may be used for temperatures up to 800°C, in cases where it is not subjected to thermal shock. For thermal cycling and thermal shock situations for temperatures up to 950°C, the 30% nickel austenitic cast irons are preferred; and above this temperature, where there is no thermal shock, the 28% chromium cast iron is recommended.

Table 3.6 gives commonly used maximum working stresses for various grades of cast irons up to 600°C.

Gray cast irons do not have the abrupt ductile to brittle fraction transition down to −40°C as takes place in steels. Special austenitic nodular cast iron similar to the AUS 203 grade, but with a higher manganese content of about 4%, has been obtained for cryogenic purposes for temperatures down to −253°C.

3.3.4 Welding Cast Iron

Welding is sometimes used to repair broken and defective castings [6]. This process is more difficult than welding steel because the high carbon content in cast iron may lead to brittle structures on cooling, thus

Table 3.6. Maximum Working Stresses for Various Grades of Cast Iron up to 600°C

	Maximum safe working stresses (N/mm^2)				
	350°C	400°C	450°C	500°C	600°C
Gray Iron, Grade 17	45	30	15	–	–
Nodular Iron: SNG 27/12	60	40	20		
Blackheart, Malleable, B340/12	45	30	20		
Pearlitic, Malleable, P33/4	75	45	30		
Austenitic Nodular, AUS203	120	100	75	45	20

causing cracking. However, special techniques have been developed for fusion and nonfusion welding. Some of these are outlined in Table 3.7. The engineer should consider carefully whether the properties of varieties of cast irons will suit his demands before specifying more expensive materials.

3.4 PROPERTIES OF STEELS

The second group of structural materials in the iron base category is steels. They have obtained an exclusive importance because of their strength, viscosity, and their ability to withstand dynamic loads. Also,

Table 3.7. Rods and Electrodes for Fusion-Welding Cast Iron

Filler Rod or Electrode	Welding Method	Suitability	Comments
Cast Iron (e.g. BS1453)	Oxyacetylene	Gray irons but not malleable	Matching color Not machinable
Mild Steel	Metal arc	Cavity filling of thin castings	Not machinable
Nickel iron (55/45)	Metal arc	For high-strength gray and nodular irons	Reasonable machinability
Nickel Copper (70/30)	Metal arc	For all gray irons	Easy to machine
Brass (60 Cu/40 Zn)	Oxyacetylene	Gray and malleable irons	Often called 'bronze' welding
Tin Bronze (7 Sn/93 Cu)	Oxyacetylene	Gray and malleable irons	

they are beneficial for producing castings, forgings, stamping, rolling, welding, machining and heat treatment works. Steels change their properties over a wide range depending on their composition, heat treatment and machining.

Most steels have a carbon content of 0.1–1%, but in structural steels this does not exceed 0.7%. With higher carbon contents, steel increases in strength but decreases in plasticity and weldability. In the carbon steels designed for welding, the carbon content must not exceed 0.3%; in the alloy steels it must not exceed 0.2%. When the carbon content in the steels exceeds the abovementioned value, they are susceptible to air hardening. Hence, high stresses may be created and hardening fractures in welding zones may be formed. The steels with low carbon content (below 0.2%) are well stamped and stretched, well cemented and nitrated, but badly machined. The physical properties of low-carbon, low-alloy steels are characterized by the following data:

- density = 7.85 kg/dm^3
- heat capacity C_p = dill kcal/m°C
- melting temperature t_m = 1400–1500°C
- thermal conductivity λ = 40–50 kcal/m°C hr

3.4.1 Low Carbon Steels (Mild Steel)

Mild steel (<0.25% carbon) is the most commonly used, readily welded construction material, and has the following typical mechanical properties (Grade 43A in BS4360; weldable structural steel):

- Tensile strength, 430 N/mm^2
- Yield strength, 230 N/m^2
- Elongation, 20%
- Tensile modulus, 210 kN/mm^2
- Hardness, 130 DPN

No one steel exceeds the tensile modulus of mild steel. Therefore, in applications in which rigidity is a limiting factor for design (e.g., for storage tanks and distillation columns), high-strength steels have no advantage over mild steel. Stress concentrations in mild steel structures are relieved by plastic flow and are not as critical in other, less-ductile steels.

Low-carbon plate and sheet are made in three qualities: fully killed with silicon and aluminum, semikilled (or balanced), and rimmed steel. Fully killed steels are used for pressure vessels. Most general-purpose structural mild steels are semikilled steels. Rimming steels have minimum amounts of deoxidation and are used mainly as thin sheet for consumer applications.

The strength of mild steel can be improved by adding small amounts (not exceeding 0.1%) of niobium, which permits the manufacture of semikilled steels with yield points up to 280 N/mm^2. By increasing the manganese

content to about 1.5% the yield point can be increased up to 400 N/mm^2. This provides better retention of strength at elevated temperatures and better toughness at low temperatures.

3.4.2 Corrosion Resistance

Equipment from mild steel usually is suitable for handling organic solvents, with the exception of those that are chlorinated, cold alkaline solutions (even when concentrated), sulfuric acid at concentrations greater than 88%, and nitric acid at concentrations greater than 65% at ambient temperatures [7].

Mild steels are rapidly corroded by mineral acids even when they are very dilute (pH less than 5). However, it is often more economical to use mild steel and include a considerable corrosion allowance on the thickness of the apparatus. Mild steel is not acceptable in situations in which metallic contamination of the product is not permissible.

3.4.3 Heat Resistance

The maximum temperature at which mild steel can be used is 550°C. Above this temperature the formation of iron oxides and rapid scaling makes the use of mild steels uneconomical. For equipment subjected to high loadings at elevated temperatures, it is not economical to use carbon steel in cases above 450°C because of its poor creep strength. (Creep strength is time-dependent, with strain occurring under stress.)

3.4.4 Low Temperatures

At temperatures below 10°C the mild steels may lose ductility, causing failure by brittle fracture at points of stress concentrations (especially at welds) [8,9]. The temperatures at which the transition occurs from ductile to brittle fraction depends not only on the steel composition, but also on thickness.

Stress relieving at 600–700°C for steels decreases operation at temperatures some 20°C lower. Unfortunately, suitable furnaces generally are not available, and local stress relieving of welds, etc., is often not successful because further stresses develop on cooling.

3.4.5 High-Carbon Steels

High-carbon steels containing more than 0.3% are difficult to weld, and nearly all production of this steel is as bar and forgings for such items as shafts, bolts, etc. These items can be fabricated without welding. These steels

are heat treated by quenching and tempering to obtain optimum properties up to 1000 N/mm^2 tensile strength.

3.4.6 Low-Carbon, Low-Alloy Steels

Low-carbon, low-alloy steels are in widespread use for fabrication-welded and forged-pressure vessels. The carbon content of these steels is usually below 0.2%, and the alloying elements that do not exceed 12% are nickel, chromium, molybdenum, vanadium, boron and copper. The principal applications of these steels are given in Table 3.8.

3.4.7 Mechanical Properties

The maximum permissible loading of low-alloy steels according to the ASME code for pressure vessels is based on proof stress (or yield point), which is applicably superior to those of carbon steels. The cost of a pressure vessel in alloy steel may be more expensive than in carbon steel. However, consideration should be given to other cost savings resulting from thinner-walled vessels, which provide fabrication savings on weldings, stress relieving, transportation, erection and foundation. Table 3.9 compares mild- and low-alloy steels used for fabricating spherical gas storage tanks.

3.4.8 Corrosion Resistance

The corrosion resistance of low-alloy steels is not significantly better than that of mild steel for aqueous solutions of acids, salts, etc. The addition of 0.5% copper forms a rust-colored film preventing further steel deterioration; small amounts of chromium (1%) and nickel (0.5%) increase the rust

Table 3.8. Applications of Low-Carbon, Low-Alloy Steels [10]

0.5 Mo 1.25 CrMo 2.25 CrMo 6 to 12 CrMoVW	High creep strength for: 1. pressure vessels such as boilers operating at elevated temperatures; and 2. oil refinery vessels such as crackers and reformers with high hydrogen pressures.
5 to 9% Cr	For oil refinery applications involving high-sulfur process streams, e.g., pipe stills.
CuCr (Corten)	Rust-resisting steels for structural applications.
2 to 9% Ni	For cryogenic applications.

Table 3.9. Comparison of Mild and Low-Alloy Quenched and Tempered Steels [11][a]

	Low-Alloy Steel, a	Low-Alloy Steel, b	Mild Steel
Relative total weight of shell plate	1	1.35	3.2
Relative total weight of other steel required for supporting structures, etc.	1	2	20
Diameter of vessels, (m)	39	31	14
Capacity of each vessel, (m^2)	30,000	15,000	1500
Shell thickness, (mm)	35	37	35

[a]Steel a was quenched and tempered to a tensile, strength of 830 N/mm^2 and a yield strength of 670 N/mm^2, and steel b to 620 and 450 N/mm^2, respectively. It was considered that the maximum thickness of metal that could be welded onsite was 38 mm.

resistance of copper steels still further. Low alloy steels have good resistance to corrosion by crude oils containing sulfur. This is illustrated by the data in Figure 3.3.

In operations involving hydrogen at partial pressures greater than 35 kgf/cm^2 and temperatures greater than 250°C, carbon steels are decarborized and fissured internally by hydrogen [13]. Small additions of molybdenum prevent hydrogen attack at temperatures up to 350°C and pressures up to 56 kgf/cm^2. For higher temperatures and pressures chromium/molybdenum steels (2.25 Cr, 0.5 Mo) are used. Figure 3.4 shows operating limits for steels in atmospheres containing hydrogen.

3.4.9 Oxidation Resistance and Creep Strength

Chromium is the most effective alloying element for promoting resistance to oxidation. Table 3.10 gives temperatures at which steels can be used in air without excessive oxidation. In atmospheres contaminated with sulfur, lower maximum temperatures are necessary.

In fractionation columns for petroleum products, where the oxygen content is restricted, higher temperatures can be used without excessive waste of the metal.

The creep strength of steels is a factor limiting the maximum temperatures for such high-pressure equipment as shells and stirrers of high temperature reactors. Table 3.10 presents creep data for temperatures ranging from 400 to 600°C. The stress for 1% creep in 100,000 hours (which is a design criterion) is accepted to be not less than two-thirds of the creep stresses.

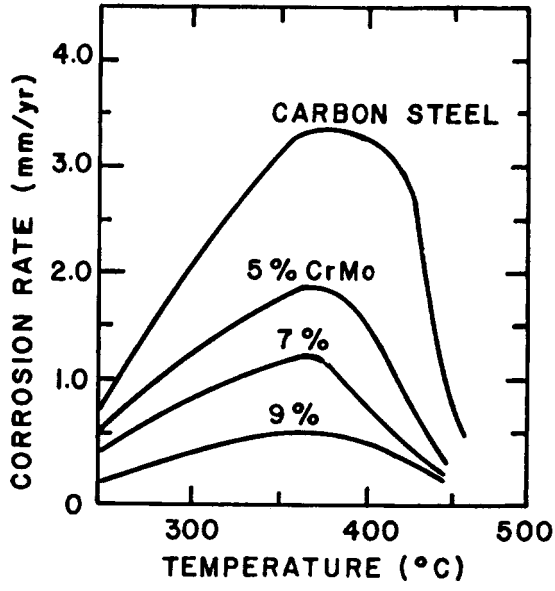

Figure 3.3. Effect of temperature on corrosion rates of steels in crude oil containing sulfur [12].

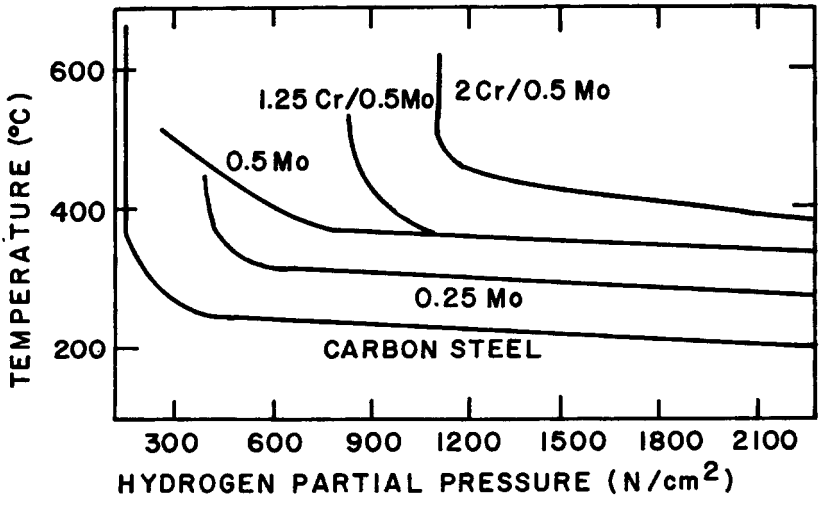

Figure 3.4. Operating limits for steels in atmospheres containing hydrogen.

Table 3.10. Alloying Effects that Improve Creep Properties [14]

Steel	Stress for rupture, N/mm^2, in 100,000 hr at						
	400°C	460°C	480°C	500°C	560°C	580°C	600°C
Carbon (silicon-killed)	180	75	48	27			
1% Cr Mo				145	40		
21% Cr Mo				168	70	52	
½% Cr Mo V				185	70		
12% Cr Mo V				215	87	70	55

3.4.10 Low-Temperature Ductility

Nickel is the alloying element used for improving low-temperature ductility. The addition of 1.5% nickel to 0.25% Cr/0.25% Mo steels provides satisfactory application for moderately low temperatures down to about -50°C.

Heat treatment by quenching and tempering improves the low temperature ductility of steels such as 0.5 Cr, 0.5% Mo, 1% Ni Type V. For lower-temperature application (below -196°C), up to 9% nickel is used as the sole alloying element.

3.4.11 High-Carbon, Low-Alloy Steels

High-carbon (about 0.4%), low-alloy steels that are not weldable usually are produced as bars and forging for such items as shafting, high-temperature bolts and gears and ball bearing components. These steels can be less drastically quenched and tempered to obtain tensile strengths of at least 1500 N/mm^2, thus minimizing the danger of cracking [15].

3.5 PROPERTIES OF HIGH-ALLOY STEELS

Stainless and heat-resisting steels containing at least 18% by weight chromium and 8% nickel are in widespread use in industry. The structure of these steels is changed from magnetic body centered cubic or ferritic crystal structure to a nonmagnetic, face-centered cubic or austenitic crystal structure.

3.5.1 Chromium Steels (400 Series), Low-Carbon Ferritic (Type 405): 12–13% Chromium

The main use of this type steel is for situations in which the process material may not be corrosive to mild steel, yet contamination due to rusting is not tolerable and temperatures or conditions are unsuitable for aluminum. However, prolonged use of these steels in the temperature range of 450 to 550°C causes low-temperature embrittlement of most ferritic steels with more than 12% chromium [16].

3.5.2 Medium Carbon Martensitic: 13–17% Chromium (Types 403, 410, 414, 416, 420, 431, 440)

These steels resist oxidation scaling up to 825°C but are difficult to weld and, thus, are used mainly for items that do not involve welded joints [17]. They are thermally hardened and useful for items that require cutting edges and abrasion resistance in mildly corrosive situations. However, they should not be tempered in the temperature range of 450 to 650°C. This reduces the hardness and wear resistance and also lowers the corrosion resistance because of the depletion of chromium in solution through the formation of chromium carbides.

3.5.3 Medium Carbon Ferritic: 17–30% Chromium (Types 430 and 446)

The 17% ferritic steels are easier to fabricate than the martensitic grades. They are used extensively in equipment for nitric acid production. The oxygen- and sulfur-resistant 30% chromium steel can be used at temperatures up to 1150°C but only for lightly loaded and well-supported furnace items because of its poor creep and brittlement properties when equipment is down to ambient temperatures [18].

3.5.4 Chromium/Nickel Austenitic Steels (300 Series)

The excellent corrosion resistance over a wide range of operating conditions and readily available methods of fabrication by welding and other means of shaping metals make these steels the most extensively used throughout the chemical and allied industries.

The formation of a layer of metal oxide on the surface of this steel provides better corrosion resistance in oxidizing environments than under reducing conditions. Common steels 304, 304L, 347, 316 and 316L are used for equipment exposed to aqueous solutions of acids and other low-temperature corrosive conditions. For high-temperature regimes involving

Table 3.11. AISI Classifications of Wrought Stainless and Heat-Resisting Steels (based on AISI type numbers) [19]

Type number	Chemical composition, %					
	C	Mn (max.)	Si (max.)	Cr	Ni	Trace Elements
	200 Series-Economy steels with Ni partly replaced by Mn					
201	0.15 max	5.50- 7.50	1.00	16.00-18.00	3.50- 5.50	N: 0.25 max.
202	0.15 max.	7.50-10.00	1.00	17.00-1900	4.00- 6.00	N: 0.25 max.
301	0.15 max.	2.00	1.00	16.00-18.00	6.00- 8.00	
302	0.15 max.	2.00	1.00	17.00-19.00	8.00-10.00	
302B	0.15 max.	2.00	2.00-3.00	17.00-19.00	8.00-10.00	
303	0.15 max.	2.00	1.00	17.00-19.00	8.00-10.00	Mo: 0.60 max.
303Se	0.15 max.	2.00	1.00	17.00-19.00	8.00-10.00	Se:0.15 min.
304	0.08 max.	2.00	1.00	18.00-20.00	8.00-12.00	
304L	0.03 max.	2.00	1.00	18.00-20.00	8.00-12.00	
305	0.12 max.	2.00	1.00	17.00-19.00	10.00-13.00	
308	0.08 max.	2.00	1.00	19.00-21.00	10.00-12.00	
309	0.20 max.	2.00	1.00	22.00-24.00	12.00-15.00	
309S	0.08 max.	2.00	1.00	22.00-24.00	12.00-15.00	
310	0.25 max.	2.00	1.50	24.00-26.00	19.00-22.00	
310S	0.08 max.	2.00	1.50	24.00-26.00	19.00-22.00	
314	0.25 max.	2.00	1.50-3.00	23.00-26.00	19.00-22.00	
316	0.08 max.	2.00	1.00	16.00-18.00	10.00-14.00	Mo: 2.00-3.00
316L	0.03 max.	2.00	1.00	16.00-18.00	10.00-14.00	Mo: 2.00-3.00
317	0.08 max.	2.00	1.00	18.00-20.00	11.00-15.00	Mo: 3.00-4.00
321	0.08 max.	2.00	1.00	17.00-19.00	9.00-12.00	Ti: 5 × C, min.
347	0.08 max.	2.00	1.00	17.00-19.00	9.00-13.00	Cb-Ta: 10 × C, min.
348	0.08 max	2.00	1.00	17.00-19.00	9.00-13.00	Cb-Ta: 10 × C, min. Ta: 0.10 max., Co: 0.20 max.

Table 3.11, continued

Type number	Chemical composition, %					
	C	Mn (max.)	Si (max.)	Cr	Ni	Trace Elements
Ferritic Steels						
F405	0.08 max.	1.00	1.00	11.50-14.50		
F430F	0.12 max.	1.25	1.00	14.00-18.00		Mo: 0.60 max.
F430Se	0.12 max.	1.25	1.00	14.00-18.00		Se: 0.15 min.
F446	0.20 max.	1.50	1.00	23.00-27.00		N: 0.25 max.
Martensitic Steels						
M403	0.15 max.	1.00	0.50	11.50-13.00		
M410	0.15 max.	1.00	1.00	11.50-13.50		Al: 0.10-0.30
M414	0.15 max.	1.00	1.00	11.50-13.50	1.25- 2.50	
M416	0.15 max.	1.25	1.00	12.00-14.00		Mo: 0.60 max.
M416Se	0.15 max.	1.25	1.00	12.00-14.00		Se: 0.15 min.
M420	Over 0.15	1.00	1.00	12.00-14.00		
M430	0.12 max.	1.00	1.00	14.00-18.00		
M431	0.20 max.	1.00	1.00	15.00-17.00	.25- 2.50	
M440A	0.60-0.75	1.00	1.00	16.00-18.00		Mo: 0.75 max.
M440B	0.75-0.95	1.00	1.00	16.00-18.00		Mo: 0.75 max.
M440C	0.95-1.20	1.00	1.00	16.00-18.00		Mo: 0.75 max.

oxidation, carborization, etc., the 309 and 310 compositions may be recommended because of their higher chromium content and, thus, better resistance to oxidation [20].

Type 304–19/10 (chromium nickel) provides a stable austenitic structure under all conditions of fabrication. Carbon (0.08% max.) is sufficient to have reasonable corrosion resistance without subsequent corrosion resistance for welded joints. Type 304 is used for food, dairy and brewery equipment, and for chemical plants of moderate corrosive duties.

Type 304L–This is used for applications involving the welding of plates thicker than about 6.5 mm.

Type 321–This is an 18/10 steel that is stabilized with titanium to prevent weld decay or intergranular corrosion. It has similar corrosion resistance to types 304 and 304L but a slightly higher strength than 304L; also, it is more advantageous for use at elevated temperatures than 304L.

Type 347–This is an 18/11 steel that is stabilized with niobium for welding. In nitric acid it is better than Type 321; otherwise, it has similar corrosion resistance.

Type 316–This has a composition of 17/12/2.5 chromium/nickel/molybdenum. The addition of molybdenum greatly improves the resistance to reducing conditions such as dilute sulfuric acid solutions and solutions containing halides (such as brine and sea water).

Type 316L–This is the low-carbon (0.03% max.) version of type 316 that should be used where the heat input during fabrication exceeds the incubation period of the 316 (0.08% carbon) grade. For example, it is used for welding plates thicker than 1 cm.

Type 309–This is a 23/14 steel with greater oxidation resistance than 18/10 steels because of its higher chromium content.

Type 315–This has a composition that provides a similar oxidation resistance to type 309 but has less liability to embrittlement due to sigma formation if used for long periods in the range of 425 to 815°C. (Sigma phase is the hard and brittle intermetallic compound FeCr formed in chromium rich alloys when used for long periods in the temperature range of 650 to 850°.)

Alloy 20–This has a composition of 20% chromium, 25% nickel, 4% molybdenum and 2% copper. This steel is superior to type 316 for severely reducing solutions such as hot, dilute sulfuric acid.

3.5.5 Precipitation Hardening Stainless Steels

These steels do not have AISI numbers and are referred to by trade name. Examples are given in Table 3.12. They can be heat-treated to give the following mechanical properties:

- Ultimate tensile strength, 1235 N/mm^2
- 0.2% proof stress, 1080 N/mm^2
- Elongation, 10%
- Hardness, 400 DHN

Properties are higher than those of austenitic steels and they retain a general level of corrosion resistance considerably better than that of chromium martensitic steels. They can be supplied as forgings, castings, plate, bar and sheets and can be readily welded and formed before hardening. A typical application is for gears in pumps used for metering chemicals where their hardness prevents wear and galling in contact with Type 316 bodies.

3.5.6 Chromium/Nickel/Ferrite/Austenite Steels

These steels also are not yet included in the AISI system. Trade names and typical compositions are given in Table 3.13. These steels can be welded successfully because they are not predisposed to excess grain growth at elevated temperatures. However, the general level of their corrosion resistance is usually inferior to that of austenitic steels, although they have good resistance to stress corrosion cracking. For example, using austenitic steels in hot, slightly acid solutions containing chlorides causes rapid cracking in a few weeks, whereas the ferrite/austenite steels may last many years.

Table 3.12. Examples of Precipitation Hardening Stainless Steels

Name	Composition, %								
	C	Si	Mn	Cr	Ni	Mo	Cu	Al	N_2
Armco 17/7 PH	0.07	0.3	0.6	17.0	7.0	–	–	1.2	–
Armco 14/8 PH–Mo	0.03	0.3	0.6	14.5	8.5	2.5	–	1.2	–
Allegheny Ludlum AM350	0.09	0.5	1.0	17.5	4.2	2.75	–	–	0.1
Allegheny Ludlum AM355	0.13	0.25	1.0	15.5	4.2	2.75	–	–	0.1
Firth Vickers 520(S)	0.05	0.3	1.0	16.0	5.5	1.75	2.0	–	–

Table 3.13. Compositions of Ferrite/Austenite Stainless Steels

Name	Composition (% wt)							
	C	Si	Mn	Cr	Ni	Mo	Nb	Cu
Firth Vickers 702	0.02	0.5	0.6	15.7	2.5	1.0	0.5	
Sandvik 3RE60	0.02	1.6		18.5	4.7	2.7		
Langley Ferralium				25	5	1.5		2

3.5.7 Maraging Steels

For corrosion resistance, these steels (18% nickel, 9% cobalt, 3% molybdenum, 0.2% titanium and 0.02% carbon) are similar to the 13% chromium steels and, therefore, are suitable for mildly corrosive situations. Because of their very high strength after heat treatment (yield strength–1390 N/mm^2, elongation–15%, impact strength) maraging steels find some use in a very high-pressure equipment.

3.6 APPLICATIONS OF HIGH-ALLOY STEELS

With austenitic stainless steels a high carbon content may cause the formation of chromium carbides at grain boundaries, consequently producing intergranular corrosion. This is most likely to occur during welding (called "weld decay"). This phenomenon may be avoided by using either a low-carbon steel (grade L) (i.e., less than 0.03% carbon), or a steel containing titanium or niobium, such as Types 321 and 347.

Intergranular corrosion depends on the length of time the steel is exposed to the sensitizing temperature (500–750°C), even if made from low-carbon or titanium- or niobium-stabilized steel.

Equipment fabricated from such a steel may undergo corrosion by condensation of even mild corrosives unless it is possible to keep it above the dew-point or to neutralize acidic condensates. This kind of corrosion can be prevented by a preliminary heat-treating at temperatures of 815–915°C. The niobium-stabilized steels respond best to this treatment.

Stress corrosion cracking, usually occurring at temperatures above 80°C, takes place in equipment made from austenitic stainless steel but does not affect ferritic steels in this way. Stress cracking most often occurs in solutions of chlorides. Concentrations of a few parts per million can cause severe cracking, even in a medium that would not be considered corrosive, for example in water main lines. Stress corrosion cracking can be caused by some thermal insulating materials, but can be prevented by cladding the insulation with aluminum. This eliminates rain from washing chlorides into contact with the steel.

Residual stresses occur from welding and other fabrication techniques even at very low stress values. Unfortunately, stress relief of equipment is not usually a reliable or practical solution. Careful design of equipment can eliminate crevices or splash zones in which chlorides can concentrate. The use of high-nickel stainless steel alloy 825 (40% nickel, 21% chromium, 3% molybdenum and 2% copper) or the ferritic/austenitic steels would solve this problem.

3.6.1 Oxidation Resistance

The ferritic chromium steels (chromium is the principal alloying element) are the most economical for very lightly loaded high-temperature situations. However, they are inadequate when creep must be accounted for. Austenitic steels are often recommended for such conditions. The 17% chromium alloys (Type 430) resist scaling up to 800°C; and 25% alloy (Type 446) up to 1100°C [21].

3.6.2 Mechanical Properties at Elevated Temperatures

The austenitic steels containing nickel are used for load-bearing applications, pressure vessels operating above 550°C, as well as for light-load cyclic operation because they have a more adherent scale than chromium steels and generally do not become brittle under high-temperature service. The 18/10 alloys are suitable for use up to 800°C in air; the 25/10 Type 310 alloys are suitable for use up to 1100°C. When using Type 316 alloy at high temperatures, care should be taken that the atmosphere is not stagnant as catastrophic oxidation of molybdenum may occur.

For high-pressure, high-temperature situations where steels are required with certified creep strength properties, the AISI austenitic steels are given the suffix H (e.g., 347H, 316H etc.).

Below creep range temperatures, economies can be made by using nitrogen-containing (for example BS1501 Part 6, Grades 304S65 and 316S66) or worm-worked grades, as these have higher proof strength than ordinary grades [22].

3.6.3 Mechanical Properties at Low Temperatures

The austenitic steels can be used at very low temperatures (low-alloy ferritic steels containing 9% nickel down to −196°C) without the risk of brittle fracture [23].

3.7 CORROSION-RESISTANT NICKEL AND NICKEL ALLOYS

Nickel alloys have two main properties: good resistance to corrosion and high-temperature strength. There are alloys for medium- and low-temperature applications and for high-temperature conditions in which creep resistance is of main importance [24].

The standard quality of commercially pure nickel (nickel 99% minimum, carbon 0.15% maximum; nickel 200/201) can be readily welded and fabricated in all wrought forms and as castings. However, it is restricted to

special applications for which nickel alloys are not adequate (for example, for equipment used in the production of caustic soda where it is not subject to stress corrosion cracking in hot caustic soda solutions) [25,26].

Unalloyed nickel is used where it is necessary to eliminate iron and copper contamination (nickel 200 up to 300°C and nickel 201 above 300°C).

3.7.1 Nickel/Copper (Alloy 400)

Alloy 400 has good mechanical properties and is easy to fabricate in all wrought forms and castings. K-500 is a modified version of this alloy and can be thermally treated and is suitable for items requiring strength, as well as corrosion resistance. Alloy 400 has immunity to stress corrosion cracking and pitting in chlorides and caustic alkali solutions.

Alloy 400 is also adequate for equipment processing of dry halogen gases and chlorinated hydrocarbons and can be used in reducing environments.

3.7.2 Nickel/Molybdenum

This alloy has a nominal composition of 65% nickel, 28% molybdenum and 6% iron. It is generally used in reducing conditions. It is intended to work in very severely corrosive situations after post-weld heat treatment to prevent intergranular corrosion. These alloys have outstanding resistance to all concentrations of hydrochloric acid up to boiling-point temperatures and in boiling sulfuric acid solutions up to 60% concentration.

3.7.3 Nickel/Molybdenum/Chromium

The composition of this alloy (54% nickel, 15% molybdenum, 15% chromium, 5% tungsten and 5% iron) is less susceptible to intergranular corrosion at welds. The presence of chromium in this alloy gives it better resistance to oxidizing conditions than the nickel/molybdenum alloy, particularly for durability in wet chlorine and concentrated hypochlorite solutions, and has many applications in chlorination processes. In cases in which hydrochloric and sulfuric acid solutions contain oxidizing agents such as ferric and cupric ions, it is better to use the nickel/molybdenum/chromium alloy than the nickel/molybdenum alloy.

3.7.4 Nickel/Chromium/Molybdenum/Iron

Because the composition of this alloy (47% nickel, 22% chromium, 7% molybdenum and 17% iron) has a higher iron content it cannot withstand such aggressive corrosion conditions as nickel/molybdenum and nickel/

molybdenum/chromium alloys. It is, however, less expensive. The nickel makes these alloys immune to stress corrosion cracking and also superior to stainless steels with respect to pitting in chloride solutions. Because of these properties, their greater cost over stainless steel is justified.

3.7.5 Nickel/Chromium/Molybdenum/Copper

These alloys (50/60% nickel, 20/30% chromium, 5/8% molybdenum, and 5/7% copper) have very good resistance to hot sulfuric acid solutions and similar environments. They are only available as castings but can be hardened by heat treatment. The castings are suitable for parts requiring cutting edges and good wear resistance under corrosion conditions, but should not be used in contact with halogens, halogen acids, and halogen salt solutions.

3.7.6 Nickel/Silicon

Nickel/silicon alloy (10% silicon, 3% copper, and 87% nickel) is fabricated only as castings and is rather brittle, although it is superior to the iron/silicon alloy with respect to strength and resistance to thermal and mechanical shock. It is comparable to the iron/silicon alloy in corrosion resistance to boiling sulfuric acid solutions at concentrations above 60%. Therefore, it is chosen for this and other arduous duties where its resistance to thermal shock justifies its much higher price compared with iron/silicon alloys.

3.8 HEAT-RESISTANT NICKEL ALLOYS

3.8.1 Nickel/Chromium

The high-chromium casting alloys (50% nickel, 50% chromium and 40% nickel, 60% chromium) are designated for use at temperatures up to 900°C in furnaces and boilers fired by fuels containing vanadium, sulfur and sodium compounds (e.g., residual petroleum products). Alloys with lower chromium contents cannot be used with residual fuel oils at temperature above 650°C because the nickel reacts with the vanadium, sulfur and sodium impurities to form compounds that are molten above 650°C [27].

3.8.2 Nickel/Chromium/Iron

Alloy 800 (32% nickel, 20% chromium and 46% iron) is used for furnace equipment such as muffles, trays and radiant tubes and in oil and petrochemical plants as furnace coils for the reforming and pyrolysis of

hydrocarbons. Higher-strength versions of alloy 800 were developed to meet this situation (802 has a higher carbon content; alloy 807 has a higher hot strength by adding cobalt and tungsten). For 807, the stress to produce rupture in 100,000 hr at 900°C is 13.8 N/mm^2 compared with 8.5 N/mm^2 for alloy 800.

3.9 COPPER AND COPPER ALLOYS

The outstanding properties of copper-base materials are high electrical and thermal conductivity, good durability in mildly corrosive chemical environments and excellent ductility for forming complex shapes. As a relatively weak material, copper is often alloyed with zinc (brasses), tin (bronzes), aluminum and nickel to improve its mechanical properties and corrosion resistance.

The classification system used in the U.S. for copper and copper alloys is given in Table 3.14.

Some different grades of copper are described in Table 3.15.

The specific gravity of the soft pure metal is 8.94. Additional properties are:

- heat capacity C_p = 0.093 kcal/kg°C
- melting temperature t_m = 1083°C
- thermal conductivity λ = 334 kcal/m °C hr
- linear expansion coefficient $\alpha = 1.65 \times 10^{-5}$
- Young's modulus E = 1,080,000 kg/cm^2
- molding temperature 1150°C

Table 3.14. Classification Used for Copper Alloys in the United States [28]

Series	Constituents
100	Not less than 99.4% copper
200	50–99% copper plus zinc and minor elements
300	Zinc and lead alloys
400	Zinc and tin alloys
500	Tin and phosphorus or phosphorus and zinc alloys
600	Aluminum, aluminum and zinc, or zinc and manganese alloys
700	Nickel, nickel and zinc, or zinc and lead

Table 3.15. Various Grades of Copper [28]

Alloy	Alloying Elements (% by wt)	Thermal Conductivity (Btu/ft^2·hr °F/ft)	Ultimate Tensile Strength (ton/in.^{2})	
			(annealed)	(hard worked)
Tough-Pitch High-Conductivity (B.S. 1036)	0.04 oxygen	229	14	20
Tough-Pitch (B.S. 1038, 9)	0.10 oxygen	228	14	20
Tough-Pitch Arsenical (B.S. 1173)	0.10 oxygen 0.3-0.5 As	102	14	21-23
Deoxidized (B.S. 1172)	0.02-0.08 P	126-175	14	20
Deoxidized Arsenical (B.S. 1171)	0.02-0.08 P 0.3-0.5 As	102	14	21-23
Oxygen-Free High-Conductivity	Trace	229	14	20
Silver-bearing	0.05 Ag 0.04 oxygen	228	14	22
Chromium Copper	0.5 Cr	100	15	29
Tellurium Copper	0.75 Te	208	15	
Beryllium Copper	About 2% Be with other elements (Co, Ni, Cr)	50	33	75

The approximate tensile strength is 14 ton/in.^{2} at ordinary temperatures, and its strength decreases with increasing temperature. Typical mechanical properties of copper as a function of temperature are given in Table 3.16.

Copper retains high impact strength and increases its tensile strength under low temperatures, including cryogenic applications. Typical data are given in Table 3.17.

Along with high mechanical properties, copper improves its conductivity in the range of lower temperatures (at −160°C ~400, −190°C ~450, and −252°C ~1600 kcal/m °C hr). It softens in the temperature range of 200 to 220°C as shown in Figure 3.5. The casting properties of copper are rather fair, but copper can be readily stretched, flattened, rolled, welded and brazed. For chemical plant work, welded or brazed joints have become almost universal.

Copper does not form protective oxide films. Therefore, its corrosion resistance is poor against most acids and salts. Many gases–haloids, sulfurous anhydride, sulfur vapors, hydrogen sulfide, carbon dioxide, ammonium–destroy copper. However, copper is highly corrosion resistant to alkali solutions.

3.9.1 Brasses

These are alloys containing more than 50% of copper used to overcome the softness, low tensile strength and high casting temperature of the pure

Table 3.16. Mechanical Properties vs Temperature for Copper

	Temperature (°C)				
	20	100	200	300	500
Tensile Strength (kg/cm^2)	2300	2200	1800	1500	840
Elongation (%)	49	48	46	32	18
Brinell Hardness (HB)	42	41	39	37	35

Table 3.17. Mechanical Properties vs Low Temperature for Copper

	Temperature (°C)					
	+20	−10	−40	−80	−120	−180
Tensile Strength (kg/cm^2)	2200	2250	2370	2730	2900	4100
Yield Strength (kg/cm^2)	600	620	650	700	750	800
Elongation (%)	48	40	47	47	45	38
Necking (%)	76	78	77	74	70	77

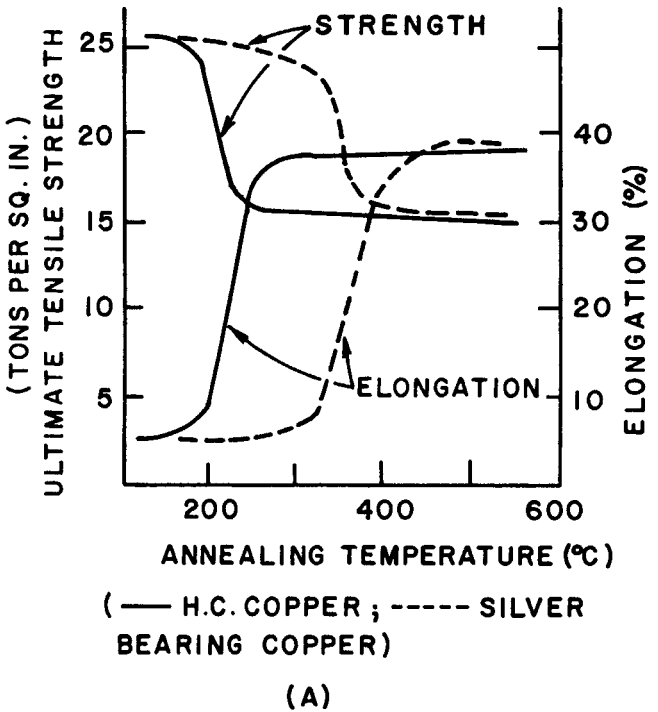

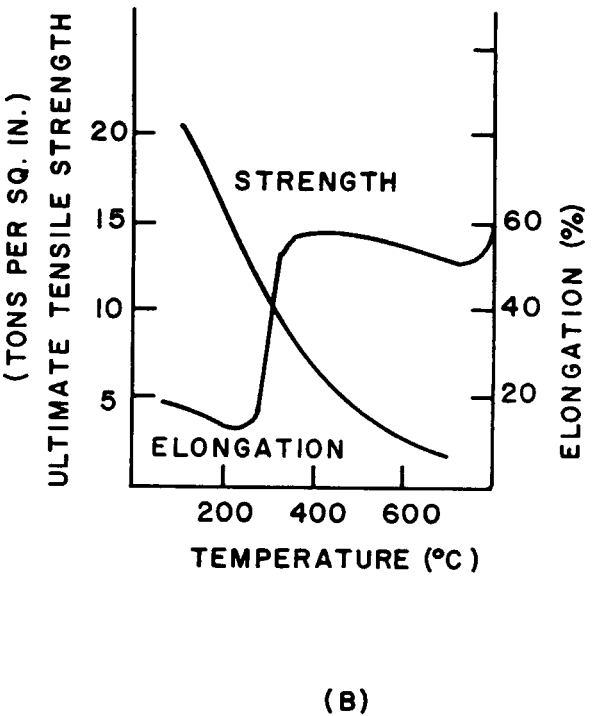

Figure 3.5. Effect of temperature on the tensile strength of copper: (A) effect of annealing on strength and ductility; (B) hardened high-conductivity copper [29].

metal. The compositions and properties of commonly used brasses are presented in Table 3.18.

These annealed brasses are used for fabrication of pressure vessels. They are characterized by the following physical properties:

- density = 8.5 kg/dm^3
- melting temperature t_m = 940°C
- heat capacity C_p = 0.092 kcal/kg°C
- heat conductivity λ = 90–100 kcal/m°C
- temperature elongation $\alpha = 2 \times 10^{-5}$

The strength and ductility of brasses are well maintained over a range of 300° to −180°C, and castings are easy to make as well as to machine. Brass behaves similarly to copper in chemical plant environments, with somewhat greater rates of attack.

3.9.2 Tin Bronzes

This is the name given to copper-tin alloys containing additional alloying elements (Table 3.19). Small amounts of phosphorus are added to deoxidize the metal and in residual amounts to harden the finished alloy. Mixtures treated in this way are referred to as phosphor-bronzes. These have the best corrosion resistance of the alloys listed in Table 3.19 and are used in applications involving contact with dilute acid solutions where bronzes containing zinc (as an alternative to phosphorus, i.e., the gunmetals) would not be sufficiently durable. The phosphor-bronzes have a low coefficient of friction and good resistance to wear. They are most often used for gears and bearings. Lead-bearing alloys corrode more rapidly than those containing only tin and copper; however, apart from this, all bronze alloys can be used with confidence wherever copper can resist corrosion.

3.9.3 Aluminum and Manganese Bronzes

The aluminum-bearing (5–12% of aluminum) alloys retain high strength, good corrosion resistance and good oxidation resistance at temperatures up to 400°C. The aluminum manganese bronzes are noted for high strength and good corrosion resistance at temperatures on the order of 400°C. These bronzes are available only as castings. They have good machining qualities combined with easy welding. With regard to corrosion resistance they appear to behave at least as well as the true bronzes.

3.9.4 Silicon Bronzes

Containing up to 3% silicon, silicon bronzes are characterized by high mechanical and antifriction properties. They are made in all wrought forms,

Table 3.18. Properties of Common Brasses [28]

Material	Nominal Composition, %					Mechanical Properties		
	Cu	Zn	Sn	Al	Others	Hardness (DPN)	0.1% Proof Stress (N/mm^2)	UTS (N/mm^2)
70/30 Brass	70	30			Arsenic 0.02/0.06	78	80	325
Aluminum Brass	76	22		2	Arsenic 0.02/0.06	75	90	355
60/40 Brass	60	40				90	115	360
Naval Brass	62	37	1			95	135	390
High-Tensile Brass (manganese bronze)	59	38			Iron 1 Manganese 0.5 Aluminum 0.2	125	145	470

Table 3.19. Properties of Tin Bronzes and Gunmetals [30]

Materials	Nominal Composition, %					Mechanical Properties		
	Cu	Sn	Zn	Pb	Others	Hardness (DPN)	0.1% Proof Stress (N/mm^2)	UTS (N/mm^2)
5% Phosphor Bronze, Wrought	95	5			Phosphorous	75	125	340
Admiralty Gunmetal, Castings	88	10	2			85	125	300
Leaded Gunmetal 85/5/5/5, Castings	85	5	5	5		65	95	220
Nickel Gunmetal	86	7	2		Nickel 5	80	155	300
Phosphor-Bronze, General-Purpose Castings	90	9.5			Phosphorus 0.1/0.4	85	125	270
Bronze for Bearings	89	10			Phosphorus 0.5			

such as plates, sheets and castings. The silicon bronzes are well molded, cold- and hot-pressure shaped (rollings, forging, stamping, etc.) and welded.

These alloys have corrosion resistance similar to that of copper, with mechanical properties equivalent to mild steel. Because silicon bronzes do not generate sparks under shocks, they can be used in the fabrication of explosion-proof equipment. Compared to tin bronzes, the tinless bronzes have a higher shrinkage (1.7–2.5% against 1.3–1.5% of tin bronzes) and less fluid-flow, which is an important consideration in designing.

3.9.5 Cupro-nickels

The cupro-nickel alloys (5–30% of nickel) are perhaps the best of all for strength and resistance to corrosion. Table 3.20 gives typical properties.

3.9.6 Corrosion Resistance

Copper-base alloys perform best under reducing conditions and in the absence of aeration. Copper and its alloys are resistant to dilute solutions of several mineral acids such as sulfuric and hydrochloric, and to a wide range of organic acids such as acetic and formic. Aluminum bronze is suitable in slightly oxidizing situations. Copper-base alloys are resistant to most alkaline solutions, but never should be exposed to strong oxidizing acids such as nitric and chromic, as well as aqueous ammonia. Copper-base alloys are also resistant to most neutral salts, except to those forming soluble complexes [31].

3.10 MECHANICAL PROPERTIES OF LEAD AND LEAD ALLOYS

Lead is the softest and most easily worked metal used in plant construction. The main difficulty in design is that the metal has a very low creep stress,

Table 3.20. Mechanical Properties of Annealed Cupro-Nickel Alloys [30]

Materials	Nominal Composition, %					Mechanical Properties		
	Cu	Ni	Fe	Mn	Others	Hardness (DPN)	0.1% Proof Stress (N/mm^2)	UTS (N/mm^2)
90/10 Copper-Nickel-Iron	88	10	2	1		70	110	310
80/20 Copper-Nickel-Manganese	80	20		0.5/0.50		75	110	340

even at ordinary temperatures, with or without work-hardening effects. In the form used for chemical plants, the purity of the metal is almost complete; small amounts of alloying additions in lead are intended to improve its mechanical properties without any significant decrease in corrosion resistance.

There are three standard leads available in the U.S. for process plant construction. These are described in Table 3.21.

Lead has the following physical properties:

- density $\rho = 11.35$ kg/dm^3
- melting point $t_m = 327$°C
- heat capacity $C_p = 0.031$ kcal/kg °C

Table 3.21. Standard U.S. Leads [32]

Analyses (%)		Chemical Lead	Acid Lead	Copper Lead
Silver:	max.	0.020	0.002	0.020
	min.	0.002		
Copper:	max.	0.080	0.080	0.080
	min.	0.040	0.040	0.040
Arsenic, Antimony and tin, max.		0.002	0.002	0.015
Zinc, max.		0.001	0.001	0.002
Bismith, max.		0.005	0.025	0.10
Lead, min.		99.90	99.90	99.85

Table 3.22. Mechanical Properties of Sheet Lead [32,33]

Ultimate Tensile Strength (kg/cm^2)	130–180
Elongation (%)	40–50
Necking (%)	100
Brinell Hardness (HB)	4–4.6

Table 3.23. Mechanical Properties of Annealed Lead vs Temperature [32,33]

	Temperature (°C)				
	20	80	150	200	265
Ultimate Tensile Strength (kg/cm^2)	135	80	50	40	20
Elongation (%)	31	24	23	20	18
Necking (%)	100	100	100	100	100

- thermal conductivity $\lambda = 30$ kcal/m °C hr
- temperature elongation $= 3.9 \times 10^{-7}$

The mechanical properties of lead are given in Tables 3.22 and 3.23.

Lead alloys have higher strength and lower melting points than pure lead and, therefore, have a lower service temperature (less than 100°C).

Dispersion-strengthened lead (DSL), obtained by a uniform dispersion of lead oxide through the lead particle matrix, has the traditional corrosion resistance of lead but much greater stiffness. DSL is fabricated as pipe and other extruded items, but has a limited application for process plant construction because the welding technique does not provide adequate strengths in joints.

The recommended maximum design stresses for a life of 5 to 10 years based on long-time creep tests are given in Table 3.24.

Another important factor in the selection of a lead alloy is fatigue strength, which may arise from high-frequency vibration from pumps and stirrers or from differential expansion from heat and cooling cycles. The marked increase of fatigue strength obtained by alloying with copper, silver and tellurium can be seen from Table 3.25.

Table 3.24. Maximum Stresses in Pipe Wall of Lead Alloys [33]

Temperature (°C)	Maximum Stress, S, N/mm², in Pipe Wall			
	99.99% Lead	Copper, Tellurium and Silver Leads	8% Antimonial Lead	DSL
20	2.21	2.42	3.50	10.34
60	1.24	1.38	1.24	10.34
100	0.66	0.86	0.76	9.62
150		0.52		3.50

Table 3.25. Fatigue-Strength Data of Lead Alloys [33]

Lead		Endurance Limit, +N/mm², for 20×10^6 Cycles	
		20°C	80°C
99.99		3.17	2.10
99.99%	+0.06 copper	4.06	3.00
99.99%	+0.005% silver +0.005% copper	4.17	3.05
99.99%	+0.06% copper +0.04 tellurium	7.70	5.10
DSL		13.8	12.50

3.10.1 Corrosion Resistance

The corrosion resistance of lead is due to the formation of a thin surface film of an insoluble lead salt that protects the metal from sulfuric acid and related compounds of any strength at ordinary temperatures. Even when the temperature increases to nearly 100°C the rates of corrosion are still low. However, strong, hot sulfuric acid attacks lead rapidly, especially if the acid is flowing.

Nitric acid in any concentration attacks lead steadily, but mixtures of nitric and sulfuric–nitration acids–are not as active and can be handled in lead.

Phosphoric acid made by the "wet process," in which phosphate rock is treated with sulfuric acid, is highly inert toward lead in any concentration for temperatures up to 150°C. However, in the "dry process," where hydrogen phosphate (H_3PO_4) is made directly from phosphorus or phosphorus pentoxide (P_2O_5), a chemical reaction with lead occurs.

Lead chloride is freely soluble in hot aqueous solutions, but lead fluoride is almost insoluble in dilute HF solutions. When the HF concentration reaches about 40%, steel is preferred.

Organic chlorinations are handled in lead where the presence of iron might produce catalyst substitution in an undesirable position. Hence, lead is the material most frequently specified for chlorinators.

Chromic acid and its salts normally are prepared in lead. Lead is especially suitable for organic oxidations because its inertness avoids any interference from reactions.

Neutral or weak acid-salt solutions usually can be handled in lead plants, with the exception of those few heavy metals that may form lead alloys by substitution. The alums and sulfates generally have little action.

3.11 ALUMINUM AND ALUMINUM ALLOYS

The main criteria in the selection of aluminum and its alloys for chemical plants are corrosion resistance, ease of fabrication and price. High-quality aluminum grades are used for chemical and process plant applications.

Physical properties of aluminum are characterized by the following data:

- density $\rho = 2.7$ kg/dm^3
- melting point $t_m = 657$°C
- heat capacity $C_p = 0.218$ kcal/kg °C
- thermal conductivity $\lambda = 188$ kcal/m °C hr
- thermal elongation coefficient $\alpha = 2.4 \times 10^{-5}$

The positive properties of aluminum are its high heat conductivity (4.5 times higher than that of steel), low specific gravity, high ductility providing good rolling, and cold and hot stamping. The negative properties are its poor castability, poor cutting and low strength. The most important specifications of aluminum as a structural material are given in Tables 3.26–3.28.

Table 3.26. Mechanical Properties of Aluminum

	Mild, Annealed Aluminum	Hardened Aluminum
Ultimate Tensile Strength (kg/cm^2)	700–1000	1500–2000
Yield Strength (kg/cm^2)	300–400	1400–1800
Elongation (%)	30–40	4–8
Necking (%)	70–90	50–60
Brinell Hardness (HB)	15–25	40–55

Table 3.27. Mechanical Properties of Aluminum Annealed at 370°C

	Temperature, °C						
	20	75	135	310	400	510	600
Ultimate Tensile Strength (kg/cm^2)	1160	1000	765	260	125	55	35
Elongation (%)	19	24	32	39	42	45	48
Necking (%)	79	83	88	97	99	99	100

Table 3.28. Allowable Tensile and Compression Stresses for Mild Aluminum (annealed) vs Metal Operating Temperature

Aluminum Temperature (°C)	Allowable Tensile Stress (kg/cm^2)	Allowable Bending Stress (kg/cm^2)
30	150	250
31-60	140	225
61-80	130	200
81-100	120	175
101-120	105	150
121-140	90	125
141-160	75	100
161-180	60	75
181-200	45	50

The low strength of aluminum can be considerably improved by alloying with magnesium, silicon, manganese, copper, etc. However, the alloys have substantially the same modulus of elasticity (70 kN/mm^2).

3.11.1 Aluminum Alloy Compositions

Aluminum alloys can be divided into three classes: aluminum of various degrees of purity; wrought alloys; and casting alloys.

3.11.2 Aluminum of Commercial 99% Minimum Aluminum Purity

This is used widely for chemical and process plant applications where its resistance to corrosion and high thermal conductivity are desirable characteristics. The strength of aluminum can be increased by cold working, as shown in Table 3.29.

The addition of alloying elements to the commercially pure metal results in an increase in its strength and usually has some favorable effects on other characteristics.

3.11.3 Nonheat-Treatable Magnesium and Manganese Alloys

These represent the best compromise between corrosion resistance and strength. It is the most useful class of alloys for chemical and process plant construction. Examples are given in Table 3.30.

Table 3.29. Effect of Purity on the Properties of Aluminum

BSI Designation	Purity (% min.)	Degree of Cold-Work	Typical Mechanical Properties: Tensile Strength (N/mm^2)	Typical Mechanical Properties: Hardness (DPN)
1	99.99	0[a]	54	16
		H4[b]	85	25
		H8[c]	108	30
1A	99.8	0	69	18
		H4	100	31
		H8	130	40
1B	99.5	0	85	21
		H4	108	31
		H8	140	39

[a] 0 = fully softened.
[b] H4 = partially cold-worked.
[c] H8 = fully cold-worked.

Table 3.30. Typical Properties of Fully Annealed Nonheat-Treatable Aluminum Alloys

BS Designation	Main Alloying Elements		Typical Mechanical Properties	
	Magnesium	Manganese	Tensile Strength (N/mm^2)	Hardness (DPN)
N3[a]		1/1.5	108	29
N4	1.7/2.8		185	45
N6	4.5/5.5		280	65
N8	4.0/4.9	0.5/1.0	295	70

[a]N signifies a nonheat-treatable alloy.

3.11.4 Heat-Treatable Alloys

These are produced by adding small amounts of copper, magnesium and/or silicon, which can increase their strength much more by heat-treatment than by cold-working (Table. 3.31).

Differences in composition require different temperatures for the high-temperature solution treatment, as well as variations both in time and temperature of aging. Heat-treatable plate and sheet alloys are not widely used for process plant construction because heat treatment has to be applied after welding to restore the mechanical properties.

Table 3.31. Effect of Heat Treatment on Heat-Treatable Aluminum Alloys

BSI Designation	Main Alloy Elements				Heat Treatment Condition	Typical Mechanical Properties	
	Copper	Magnesium	Silicon	Manganese		Tensile Strength (N/mm^2)	Hardness (DPN)
H30[a]	–	0.4/3.4	0.6/1.3	0.4/1.0	M	215	70
					TF[b]	310	100
H15	3.8/4.8	0.2/0.8	0.5/0.90	0.3/1.2	M[c]	400	125
					TF	430	160
H9	–	0.4/0.9	0.3/0.7		M	155	50
					TF	200	80

[a]H denotes a heat-treatable alloy.
[b]TF is solution heat treatment followed by precipitation hardening.
[c]M as cast.

3.11.5 Casting Alloys

These are used as corrosion-resistant materials. Examples are given in Table 3.32. Some can be strengthened by heat treatment. The alloys containing substantial amounts of silicon have the best foundry characteristics and a high resistance to corrosion, but are not readily machined.

3.11.6 Temperature Effects

Tensile strength diminishes rapidly with increasing temperature above 200°C. The high-magnesium alloys N5, N6 and N8 should not be used above 65°C because higher temperatures make them susceptible to stress corrosion cracking.

Aluminum and its alloys are excellent for low temperatures as well as for cryogenic applications because their tensile strength and ductility are increased at low temperatures.

They are widely employed in the manufacture, storage and distribution of liquified gases, particularly on sea and road tankers. The most popular alloy for cryogenic applications is 4.5% magnesium alloy (N8). Table 3.33 gives the boiling points of the most common cryogenic liquids and the minimum temperatures at which various materials can be used.

3.11.7 Corrosion Resistance

Clean metallic aluminum is extremely reactive. Even exposure to air at ordinary temperatures is sufficient to promote immediate oxidation. This reactivity is self-inhibiting, however, which determines the general corrosion behavior of aluminum and its alloys due to the formation of a thin, inert, adherent oxide film. In view of the great importance of the surface film, it can be thickened by anodizing in a bath of 15% sulfuric acid (H_2SO_4) solution or by cladding with a thin layer of an aluminum alloy containing 1% zinc.

Aluminum is suitable for contact with cold dilute sulfuric acid solutions, especially if an anodizing treatment has been applied. As the H_2SO_4 concentration increases, rates of attack also increase. This is illustrated in Figure 3.6. Aluminum may be used for handling oleum; however, the passivity of the metal with sulfuric acid is soon destroyed as the temperature rises, and the boiling solutions of an acid of any concentration attacks rapidly.

Aluminum and stainless steel are used almost interchangeably for any strength of *nitric acid*. Figure 3.7 compares the rate of attack of cold nitric acid on stainless steel and aluminum. Figure 3.7 shows that higher rates of aluminum corrosion occur up to about 80% nitric acid (HNO_3), but aluminum is still to be preferred over stainless steel for any concentration above 80%.

Table 3.32. Various Aluminum Casting Alloys

BSI Designation	Alloy Elements			Heat Treatment Condition	Mechanical Properties[a]	
	Magnesium	Silicon	Manganese		Tensile Strength (N/mm^2)	Hardness (DPN)
LM5	3.0/6.0	–	0.3/0.7	M[b]	125	60
LM6	–	10.0/13.0	–	M	170	55
LM9	0.2/0.6	10.0/13.0	0.3/0.7	TE[c]	185	70
				TF[d]	245	100
LM18	–	4.5/6.0	–	M	280	40
LM25	0.2/0.45	6.5/7.5	–	M	130	60
				TE	155	70
				TF	245	100

[a]As sand castings. The new heat treatment designations and their former equivalents:
[b]M = as cast.
[c]TE = precipitation treated (P).
[d]TF = solution and precipitation treated (WP).

Table 3.33. Aluminum Alloys Recommended for Cryogenic Applications

Cyrogenic Liquid	Boiling Point (°C)	Material	Minimum Temperature of Use (°C)
Propane	–42	Carbon steels	–50
Carbon Dioxide	–78	2.25% nickel steel	–65
Acetylene	–84	3.5% nickel	–100
Ethylene	–104	Aluminum/magnesium alloys	–270
Methane	–161	Austenitic stainless steel	–270
Oxygen	–182	Nickel alloys	–270
Argon	–186	Copper alloys	–270
Nitrogen	–196		
Hydrogen	–253		

Aluminum does not have the mechanical reliability of stainless steel, especially at higher temperatures. However, it is not nearly as susceptible to "weed decay" or localized attack around the welds.

3.11.8 Organic Acids

These are the second great field of application for aluminum alloys, with the exception of aluminum magnesium alloys. One restriction always applies

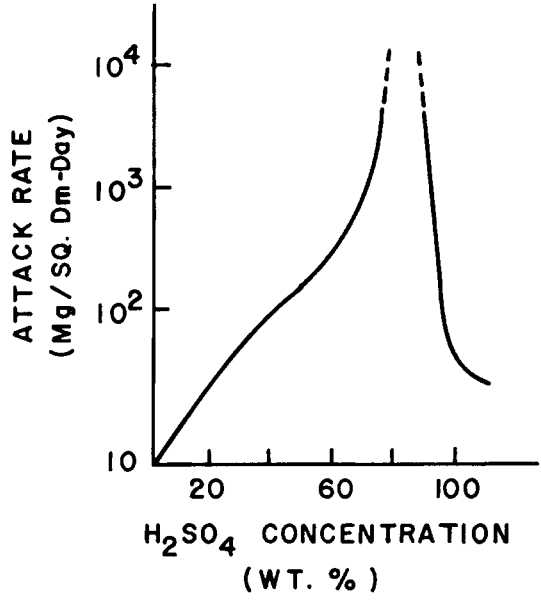

Figure 3.6. Effect of sulfuric acid on aluminum.

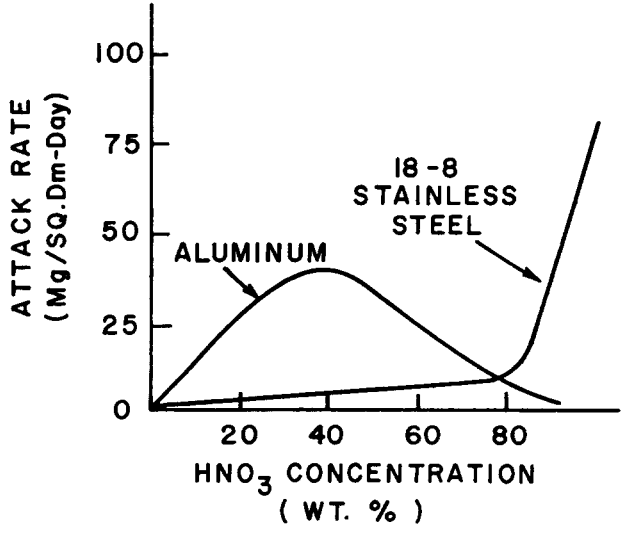

Figure 3.7. Effect of nitric acid on stainless steel and aluminum.

in their use—the rapid increase in corrosion rate when perfectly anhydrous acids are being handled at high temperature. The resistance to most acid-reacting organic compounds increases with the acid concentration.

It is possible to carry out such oxidation processes as the conversion of acetaldehyde to acetic acid, or methyl alcohol to formaldehyde in aluminum plants, thus avoiding boiling anhydrous acids. The metal is especially valuable for handling delicate chemicals, which must not acquire metallic taste or color. For these reasons, aluminum has found extensive use in the food, dairy, brewing and fishing industries.

Neutral salts and aqueous solutions of various acids generally follow the acid action. Aluminum has no apparent action or microbiological processes (i.e., the production of antibiotics by deep-vessel fermentation). Fermentation tanks, as well as various absorbing and extracting units, can be made from aluminum.

Since aluminum is not attacked by hydrogen sulfide (H_2S) solutions, it is used widely as a material in refineries for the handling of hydrocarbons made from "sour" crudes. In the strongly oxidizing conditions of manufacturing hydrogen peroxide, aluminum is one of the few materials that does not undergo decomposition.

Steam-heated aluminum castings are used for the melt spinning of nylon and polyester fibers and have been used for storage of raw materials during manufacturing, as well as for storage of acetic acid in cellulose acetate plants.

3.12 MISCELLANEOUS PRECIOUS METALS

Titanium, tantalum and zirconium are used for construction in process plants. The principal physical and mechanical properties of these three metals are given in the Table 3.34.

Table 3.34. Properties of Titanium, Tantalum and Zirconium [34]

	Density (g/cm^2)	Melting Point (°C)	Coefficient of Expansion $\times 10^{-6}$ (°C)	Thermal Conductivity (W/m °C)	Yield Strength (N/mm^2)	Tensile Modulus (N/mm^2)	Hardness (DPN)
Titanium	4.5	1668	9.0	15	345	103,000	150
Tantalum	16.6	2996	6.5	55	240	185,000	170
Zirconium	6.5	1852	7.2	17	290	80,000	180

3.12.1 Titanium

Titanium is a white metal and, when cold, is brittle and may be powdered. At a red heat it may be forged and drawn. The tensile strength of titanium is almost the same as that of steel, while its specific gravity (4.5) is almost two times less than that of steel. Hence, its specific strength (tensile strength/specific gravity) is 1000, which is considerably higher than that of 18/8 steel, which has a value of 700. Titanium is now available as plate, sheet and tube, and its use in chemical plant construction is considered common.

The mechanical properties of titanium are greatly affected by small amounts of oxygen and nitrogen. The properties of the commercially pure grade metal and its alloys are given in the Table 3.35.

The alloys with aluminum, vanadium and tin have considerably greater strength but lower corrosion resistance. These alloys are used as rotating components in centrifuges, where the strength to weight ratio is important. About 0.2% palladium alloy gives better corrosion resistance than the first four grades in Table 3.35.

According to the ASME code (Section VIII, Div. 1) titanium may be used up to 300°C. The fatigue strength of the metal is about half the tensile strength. Typical values for the tensile strength of titanium and its alloys at temperatures up to 500°C are given in Table 3.36. The corrosion resistance of all grades of commercial pure titanium is similar. This protection relies on a surface film of metallic oxide. Therefore, titanium is most useful in oxidizing environments.

Table 3.35. Mechanical Properties of Titanium and Alloys (ASTM B265/337/338) [35]

Grade	Alloying Element (% max.)	UTS (N/mm^2 min.)	Elongation (%)	Hardness (DPN)
1	Oxygen 0.18	240	24	150
2	0.25	345	20	180
4	0.40	550	15	260
5	Aluminum 6 Vanadium 4	900	10	
6	Aluminum 5 Tin 2.5	820	10	
7	Palladium 0.15/.25 Oxygen 0.25	345	20	180
8	Palladium 0.15/0.25 Oxygen 0.35	450	18	210

Table 3.36. Effect of Elevated Temperatures on Strength of Titanium and Alloys [35]

Material ASTM Grade	Tensile Strength, N/mm^2, at Test Temperature of					
	Room Temperature	100°C	200°C	300°C	400°C	500°C
1	310	295	220	170	130	
2	480	395	295	205	185	
3	545	460	325	250	200	
4	760	585	425	310	275	
5	1030	890	830	760	690	655
6	960	820	690	620	535	460
7	480	395	295	205	185	
8	545	460	325	250	200	

Titanium is generally suitable for use in boiling nitric acid, aqua regia, nitrites, nitrates, chlorides, sulfides, phosphoric acid, chromic acid and organic acids. The main advantage of titanium over stainless steel is that it is not affected by pitting or stress corrosion cracking in solutions containing chloride ions and has better resistance to erosion. It can be more easily protected anodically (less than 50 W for a surface equal to 100 m^2).

The corrosion resistance of unalloyed titanium in hydrochloric or sulfuric acids can be increased significantly by anodic protection, which maintains the oxide film so that the corrosion will be negligible even in severely reducing conditions.

If the metal is exposed to highly oxidizing conditions in the complete absence of water, a violent reaction may occur (for example, in completely dry chlorine). In this case, 0.015% water is added as the minimum for passivation of titanium.

3.12.2 Tantalum

Tantalum is a light bluish metal: ductile, malleable and, when polished, resembles platinum. The metal is characterized by high strength and infusibility. Its melting point is 3000°C. The metal has high ductility, good forging, flattening and stamping. Excellent welds can be made by the TIG process; however, as tantalum reacts with oxygen and nitrogen at temperatures above 300°C, careful shielding with argon of all areas likely to exceed this temperature is vital for success [36,37].

Tantalum has a degree of corrosion resistance similar to that of glass; therefore, it can be used in environments for which glass is required but without the risk of fracture and for purposes of heat transfer. The thermal conductivity of the metal is similar to that of nickel and nickel alloys.

In tantalum equipment very high flowrates can be admitted before erosion and cavitation occur, and a much higher thermal flux can be achieved. Therefore, the higher cost of tantalum sometimes can be justified.

The same volume of metal tantalum is 30 times more expensive than titanium, but it has the range of corrosion resistance more comparable with the precious, rather than the base, metals. It is only 3% of the cost of platinum and 8% of the cost of gold.

In many applications tantalum can be substituted for platinum and gold, and there are some environments in which tantalum is more corrosion resistant than platinum. Table 3.37 lists the main chemicals for which tantalum is not a suitable substitute for platinum and, conversely, those for which tantalum is better than platinum. Tantalum is rapidly embrittled by nascent hydrogen even at room temperature. Therefore, it is very important to avoid the formation of galvanic couples between tantalum and other metals.

3.12.3 Zirconium

Of high purity, zirconium is a white, soft ductile and malleable metal. At 99% purity, when obtained at high temperatures it is hard and brittle. The rapid development of production techniques of zirconium has resulted because of its suitability for nuclear engineering equipment.

Table 3.37. Comparative Corrosion Resistance of Tantalum and Platinum

Chemical	Tantalum	Platinum
Acetylene	G[a]	NR
Alkalis	NR[b]	G
Bromine (wet or dry)	G	NR
Bromic Acid	G	NR
Cyanides	G	NR
Fluorine	NR	G
Compounds Containing Fluorine	NR	G
Ethylene	G	NR
Lead Salts	G	NR
Lead Oxide	NR	G
Metals (molten)	G	NR
Mercury	G	NR
Mercury Compounds	G	NR
Oleum	NR	G
Phosphoric Acid	NR	G
Sulfur Trioxide	NR	G

[a]G = good.
[b]NR= not recommended.

Zirconium has outstanding resistance to hydrochloric acid and is a cheaper alternative to titanium for this duty. It is superior to titanium in resistance to sulfuric acid. Zirconium has excellent resistance to caustic alkalies in all concentrations and is superior to both titanium and tantalum in this respect.

3.12.4 Precious Metals

The precious metals are many times the cost of the base metals and, therefore, are limited to specialized applications or to those in which process conditions are highly demanding (e.g., where conditions are too corrosive for base metals and temperatures too high for plastics; where base metal contamination must be avoided, as in the food and pharmaceutical industries; or where plastics cannot be used because of heat transfer requirements; and for special applications such as bursting discs in pressure vessels). The physical and mechanical properties of precious metals and their alloys used in process plants are given in Table 3.38.

3.12.5 Silver

Silver is a white metal; it is softer than copper and harder than gold. One use of the pure metal (about 99.99%) is as a liner bonded to stronger or cheaper metals. The metallic bond is usually of high thermal conductivity.

Both steel and copper vessels may be lined with thin silver sheets in the same way as for homogeneous lead lining. As silver is extremely resistant to most organic acids at all concentrations and temperatures, it is used widely for handling foodstuffs and pharmaceutical products where nontoxicity and

Table 3.38. Properties of Precious Metals [38]

	Platinum	Gold	Silver	10% Rh/Pt	20% Rh/Pt	10% Ir/Pt	20% Ir/Pt	70% Au 30% Pt 1% Rh
Density (g/cm^3)	21.45	19.3	10.5	20.0	18.8	21.6	21.7	20
Melting point (°C)	1769	1063	961	1850	1900	1800	1815	1250
Thermal Conductivity (W/m °C)	70	290	418					
Young's Modulus (kN/mm^2)	170	70	70	195	215			
Tensile Strength Annealed (N/mm^2)	140	110	140	325	415	370	695	925
Hardness (DPN) Annealed	40	20	26	75	90	120	200	250

discoloration are essential. Silver is inert to hot alkaline solutions and very resistant to fused alkalis in the absence of oxidizing agents and to all neutral salt solutions.

3.12.6 Gold

Gold can be used only in very small portions or very thin coatings because of its cost. Most of the applications for which it was used in the past have now been accomplished with tantalum at a much lower cost. A gold/platinum/rhodium alloy is used in the manufacture of rayon-spinning jets in the production of rayon fibers. This alloy presents the combination of strength, corrosion resistance and abrasion resistance necessary to prevent changes in hole dimensions.

3.12.7 Platinum

Platinum, plus other platinum group metals (Pt, Pd, Ir, Os, Rh, Ru), within the range of 99.8–99.99% Pt content are almost completely inert to chemical reagents under oxidizing conditions over a wide range of temperatures. At high temperatures under reducing conditions, however, it is attacked by all base metals, by molten silver and gold, and elemental silicon, boron, arsenic, phosphorus, bismuth and sulfur. One particular case is the handling of molten glass in the manufacture of glass wool or glass threads for weaving. Again, platinum electrodes are used for electrolytic production of highly oxidizing materials, such as ammonium persulfate and chlorine from brine solutions.

3.13 METALLIC COATINGS

Metallic coating involves the deposition of metals and alloys onto other metals ranging in thickness from a few microns to several millimeters. This method allows for the possibility to obtain the properties of the coating at low cost, compared with making the items entirely from the coating composition. Coating permits the use of metals or alloys that are too brittle or too weak in the solid form (for example, chromium and zinc). The main reasons for applying a coating are prevention of corrosion, oxidation and abrasion. Coatings are produced by four main methods: electrodeposition, spraying, dipping and diffusion.

3.13.1 Electrodeposition

Nickel, chromium and zinc are commonly used as electrodeposits. Chromium, the hardest of these coatings, is applied for abrasion resistance

and low coefficient of friction. Nickel and zinc electrodeposits are used for resistance to corrosion, the latter for mildly corrosive conditions [39,40].

3.13.2 Dip Coating

Dip coating involves immersion of steel or copper in a bath of molten coating metal (zinc, tin and/or aluminum). Hot dip-galvanized (zinc-coated) steel should not be used in circuits containing copper equipment. This can result in galvanic corrosion at the copper/galvanized junctions, as well as cause overall galvanic corrosion of the zinc by copper redepositing from the water or process stream. Galvanized equipment is not recommended for use with liquors above 60°C. Above this temperature there is a reversal of the polarity of the zinc/steel couple, and the coating ceases to be protective where flaws appear in the coating. Impervious coatings of tin for mild corrosive conditions can be formed on steel and copper by dipping in a molten bath of tin.

Aluminum is the highest melting point metal (660°C) applied by hot dipping. Aluminized steel can be used at temperatures up to 550°C without appreciable oxidation. This steel has very good resistance to gases and vapors containing small quantities of sulfur dioxide and hydrogen sulfide [41,42,43].

3.13.3 Sprayed Coatings

Zinc, aluminum, nickel alloys, cobalt alloys and tungsten carbide are applied for sprayed coatings, which are slightly porous. Flame-sprayed zinc coatings are used for corrosion protection of steel and provide similar properties for galvanized coatings.

Sprayed aluminum coatings used on steel for protection against atmospheric corrosion are preferred over zinc for use in areas with considerable contamination of the atmosphere by sulfur oxides [44]. Sprayed aluminum also is used for the protection of steel at elevated temperatures up to 550°C. For temperatures of 550–900°C, aluminum is converted to a high-melting point aluminum/iron compound by heating the coated equipment to 800/900°C and maintaining it at that temperature for 15 minutes. For protection up to 1000°C, a sprayed coating of nickel chromium and nickel and cobalt alloys is applied. Nickel or cobalt alloys containing small amounts of boron or silicon can be deposited with very simple equipment, requiring very little heating of the base metal.

3.13.4 Diffusion Coatings

The purpose of diffusion coatings is not to produce a coating of another metal on the substrate, but to change the composition of the surface layers

of the substrate by alloying with the diffusing metal chosen (zinc, aluminum, chromium and silicon). The surface properties after such treatment depend not only on the metal diffused, but also on the composition of the substrate. The diffusion coating causes very little change in the dimensions of the piece being treated, which is important for items machined to fine limits, such as nuts and bolts [45,46].

Zinc diffusion is used for protection against atmospheric corrosion. Aluminum diffusion is used to improve the oxidation resistance of low-carbon steels.

Chromium diffusion applied to a low-carbon steel produces a surface that has the characteristics of ferritic stainless steel, such as AISI446 to a depth about 0.1 mm. When diffusion is applied to a high-carbon steel, a surface rich in chromium carbides is formed. This has a hardness greater than 1000 VHN, which provides good resistance to abrasion.

Nickel alloys and stainless steels such as AISI310 (25Cr/20Ni) diffusion treated with chromium enhance resistance to sulfur gases at high temperatures. The chromium-rich surface prevents the formation of nickel sulfide.

The use of equipment close to the temperature at which the material was diffusion treated will result in continuing diffusion of chromium, aluminum etc., into the substrate, thus depleting chromium with consequent loss in oxidation and corrosion resistance. For aluminum, this effect is noticeable above 700°C in steels, and above 900°C in nickel alloys. For chromium, the effect is pronounced above 850°C for steels and above 950°C for nickel alloys.

Silicon used for diffusion treatment of carbon steels enhances corrosion resistance to sulfuric acid. Such a treatment has the surface durability of iron/silicon alloys without their marked brittleness.

3.14 CARBON, GRAPHITE AND GLASS

3.14.1 Carbon and Graphite

Structural carbon shapes fabricated by heating coke with a mixture of tar and pitches are porous and are made impermeable by impregnation with a resin (usually a phenolic resin). Cashew nut shell liquid resin is used when resistance to alkalis and acids is required.

Graphite is used widely in process plants for its high thermal conductivity (about six times that of stainless steel). Typical properties of impregnated carbon and graphite are given in Table 3.39.

Impregnated carbon and graphite can be used up to 180°C, and porous graphite can be used up to 400°C in oxidizing environments and 3000°C in a reducing atmosphere. Carbon and graphite bricks and tiles are used for

Table 3.39. Properties of Carbon and Graphite [47]

	Carbon	Graphite
Density (g/cm^3)	1.8	1.8
Tensile Strength (N/mm)	28	10
Compressive Strength (N/mm^2)	135	70
Tensile Modulus (kN/mm^2)	10	3
Thermal Conductivity (W/m °C)	4	70
Linear Coefficient of Expansion ($°C^{-1}$)	3×10^6	4×10^6

lining process vessels and are particularly suitable for applications involving severe thermal shock.

Tube and shell heat exchangers, small distillation columns, reactors, valves, pumps and other items are available in impregnated graphite. Graphite can be joined only by cementing, which embrittles on aging. It is prone to mechanical damage, particularly when subjected to tensile stresses.

3.14.2 Glass

By virtue of its chemical and thermal resistances, borosilicate glass has superior resistance to thermal stresses and shocks, and is used in the manufacture of a variety of items for process plants. Examples are pipe up to 60 cm in diameter and 300 cm long with wall thicknesses of 2–10 mm, pipe fittings, valves, distillation column sections, spherical and cylindrical vessels up 400-liter capacity, centrifugal pumps with capacities up to 20,000 liters/hr, tubular heat exchangers with heat transfer areas up to 8 m^2, maximum working pressure up to 275 kN/m^2, and heat transfer coefficients of 270 kcal/hz/m^2°C [48,49].

Borosilicate glass has the following properties:

- density ρ = 2.7–31 kg/dm^3
- heat capacity C_p = 0.1–0.3 kcal/kg°C
- melting point t_m = 1000–1200°C
- thermal conductivity λ = 0.4–1.0 kcal/m°C hr
- linear coefficient of expansion $\alpha = 5 \times 10^{-6}$
- tensile strength 500–900 kg/cm^2
- compression strength 6,000–13,000 kg/cm^2
- modulus of elongation E = 620,000 kg/cm^2
- Poisson's ratio $\bar{\mu}$ = 0.27–0.29.

Because borosilicate is a brittle material, its design stress is restricted to less than 7 N/mm^2. Borosilicate glass is attacked by hydrofluoric acid even when a solution contains only a few parts per million of fluoride ions, and at

elevated temperatures by strong solutions of phosphoric acid (85% acid at 100°C is the approximate limit). It is attacked also by strong bases such as sodium hydroxide and potassium hydroxide solutions, in which the effect is linear with time. As for all other materials, borosilicate represents almost the final resort in corrosion resistance. It has a very high degree of passivity to sensitive chemicals.

3.15 CEMENTS, BRICKS AND TILES

3.15.1 Cements

Cements are used mainly for jointing brickworks, drainage gullies, pipes and storage tanks. Portland cement has very poor resistance to acids but good resistance to alkaline liquors.

High-alumina cement is very quick setting, but its acid resistance is only slightly better than Portland cement, and it is rapidly attacked by alkalis. Super-sulfated cement is used for liquors high in sulfates. It is resistant to acidic conditions down to a pH of 3.5 and has alkali resistance similar to Portland cement [50].

3.15.2 Bricks and Tiles

Lining vessels and equipment using this type of construction consists of a membrane, acid-resistant bricks or tiles, and chemical-resistant mortar for joining the bricks (tiles) together.

Membranes are applied directly to the metal or concrete surface to protect from corrosion by any liquor that penetrates the brick lining through pores and cracks. Membranes consist of sheet material bonded to the metal or concrete, e.g., flexible PVC sheet, or it may be formed in situ (e.g., polyester resin reinforced with glass fiber, or synthetic rubber sheet, lead, polyisobutylene, polyethylene and asphalt).

Brick lining (40–65 mm thick) is used for reducing the temperature at the membrane. This protects the membrane from deteriorating with free access of the process liquors and prevents its erosion and other mechanical damage [51,52].

Red and blue acid-resistant bricks are resistant to all inorganic and organic chemicals, except for hydrofluoric acid and hot concentrated caustic alkalis. Acid-resistant fireclay bricks are used for conditions involving elevating temperatures and corrosive condensates. Highly vitrified materials such as chemical stoneware, porcelain and basalts are used for extremely severe duties or where contamination of the process liquors is undesirable.

Chemical-resistant cements are used for all acids up to temperatures of 170°C, but they are attacked rapidly by even dilute alkaline solutions.

Sulfur mortars (mixture of sulfur and inert fillers with small amounts of organic plasticizers) are used for shrinkage mitigation and for eliminating thermal shocks for temperatures up to 80°C. These mortars have poor resistance to alkalis and nonpolar organic solvents.

Phenolic mortars have excellent resistance to acids, particularly for dilute nitric acid (up to 50%) and sulfuric acid (60–90%) but can only tolerate very dilute alkaline solutions at low temperatures.

Furnace mortars are used over a very wide range of conditions. They are resistant to nonoxidizing acids, alkalis, and solvents up to 190°C. Carbon fillers should be used for conditions involving strong alkalis and compounds containing fluorine.

Maximum chemical resistance of polyester mortars is obtained from cements made from isophthalic or biphenol resins. The biphenolic resins are preferred for alkaline and hypochlorite solutions.

Epoxy resin cements are specifically intended for resistance to caustic alkalis and organic solvents, but they also have fair acid resistance. They have excellent bond strength to other materials including ceramic and concrete. The corrosion resistances of the cements described above are given in Table 3.40.

Bricks or tiles that line steel vessels have the tendency to crack when the vessel is heated because of the differences in the coefficients of thermal expansion between ceramic and steel.

Table 3.40. Chemical Resistance of Bedding and Jointing Cements

	Dilute Acids	Concentrated Acids	Caustic Alkalis	Mineral Oils	Animal and Vegetable Oils	Oxidizing Acids
Rubber-Latex	G[a]	P[b]	G	F[c]	P	P
Silicate	VG[d]	VG	P	G	G	VG
Sulfur	G	G	P	G	P	G
Phenolic	VG	VG	P	G	G	F
Furane	VG	VG	P	G	G	P
Polyester	VG	G	VG	VG	VG	VG
Epoxy	VG	G	VG	VG	VG	F

[a]G = good.
[b]P = poor.
[c]F = fair.
[d]VG = very good.

3.16 PLASTIC AND THERMOPLASTIC MATERIALS

Plastics are highly resistant to a variety of chemicals. They have a high strength per unit weight of material; therefore, they are of prime importance to the designer of chemical process equipment. Their versatility in properties has provided new and innovative designs of equipment. They are excellent substitutes for expensive nonferrous metals.

Plastics are high-molecular-weight organic compounds of natural or mostly artificial origin. In fabrication, plastics are added with fillers, plasticizers, dyestuffs and other additives, which are necessary to lower the price of the material, and give it the desired properties of strength, elasticity, color, point of softening, thermal conductivity, etc.

Plastics are subidivided into two types: thermoplastic and thermosetting. The thermoplastics can be softened by heat and hardened again by subsequent cooling. This process is reversible and can be repeated many times. By contrast, the thermosetting resins are first softened and melted and, at subsequent heating to a definite temperature, they are irreversibly hardened, becoming insoluble [53].

Plastics are particularly resistant to inorganic chemicals but are often inferior to metals in resistance to organic chemicals. Table 3.41 gives general resistance properties and typical uses of thermoplastics. The strength characteristics obtained from short-time tests are not suitable for design purposes because all plastics gradually elongate or creep when subjected to sustained loads for long periods, even at ambient temperatures.

The physical and mechanical properties of the principal thermoplastics of interest for process plant applications are listed in Table 3.42. Table 3.43 gives typical hydrostatic design stresses for different types of thermoplastic pipe. Plastics widely employed in piping systems are described briefly below.

3.16.1 Polyolefins

Polyethylene and polypropylene are semitransparent plastics made by polymerization. They are produced from ethylene and propylene in a variety of grades. Their mechanical properties are determined mainly by density (degree of crystallinity) and molecular weight, characterized by the Melt Index (MI).

The effect of these two parameters on mechanical and physical properties of polyethylene and polypropylene are shown in Tables 3.44 and 3.45. The copolymer grade is usually propylene with a little ethylene (5%), which considerably improves the impact strength while causing only a slight loss in stiffness.

Table 3.41. General Properties and Uses of Thermoplastic Materials [54]

Plastic Material	First Introduced	Strength	Electrical Properties	Acids	Bases	Oxidizing Agents	Common Solvents	Product Manufacturing Methods	Common Applications
Acetal Resins	1960	H[a]		P[b]	P	P	G[c]	Injection, blow or extrusion molded	Plumbing, appliance, automotive industries
Acrylic Plastics	1931		G	P	P	F-P	F-P	Injection, compression, extrusion or blow molded	Lenses, aircraft and building glazing, lighting fixtures, coatings, textile fibers
Arc Extinguishing Plastics	1964		E[d]					Injection or compression molded and extruded	Fuse tubing, lightning arrestors, circuit breakers, panel boards
Cellulose Plastics Cellulose Acetate	1912	M[e]					P	All conventional processes	Excellent vacuum-forming material for blister packages, etc.
Cellulose Acetate Butyrate		H				F	F	Molded with plasticizers	Excellent moisture resistance-metallized sheets and film, automobile industry
Cellulose Nitrate	1889	M						Cannot be molded	Little use today because of fire hazard
Cellulose Propionate		H						All conventional processes	Toys, pens, automotive parts, radio cases, toothbrushes, handles

Table 3.41, continued

Plastic Material	First Introduced	Strength	Electrical Properties	Acids	Bases	Oxidizing Agents	Common Solvents	Product Manufacturing Methods	Common Applications
Ethyl Cellulose		H+						All conventional processes	Military applications, referigerator components, tool handles
Chlorinated Polyether	1959	M+	A+[g]	VG	VG	VG	VG	Injection, compression, transfer or extrusion molding	Bearing retainers, tanks, tank linings, pipe, valves, process equipment
Fluorocarbon (TFE)	1930	M	A	VG	VG	VG	VG	Molding by a sintering process following preforming	High-temperature wire and cable insolution, motor-lead insulation; chemical process equipment
Fluorinated Ethylene Propylene (FEP)		M+	A	G	G	G	G	Injection, blow molding, and extrusion and other conventional methods	Autoclavable laboratory ware and bottles
Glass-Bonded Mica	1919	M	G	VG	G	G	G	Moldable with inserts like the organic plastics	Arc chutes, radiation generation equipment, vacuum tube components, thermocouples
Hydrocarbon Resins	1960	M	A	A	A	A	A	Molding with transfer and compression process, costing	Used as lamination resins for various industrial laminates

Methylpentene Polymers (TPX)	1965	M+	E	F	F	F	F	Most conventional processes	Used for electrical and mechanical applications
Parylene (polyparaxylene)	1960							A monomer of the organic compound is vaporized and condensed on a surface to polymerize	Coating material for sensing probes
Phenoxy Plastics	1962	H-M	F	F	F	F	F	Injection, blow and extrusion molding, coatings and adhesives	Adhesives for pipe-bonding compounds, bottles
Polyamide Plastics Nylon	1938	H-M	A	P	P	P	VG	Injection, blow and extrusion molding	Mechanical components (gears, cams, bearings), wire insulation pipe fittings
Polycarbonate Plastics	1959	H-M	VG	G-F	G-F	F	F	All molding methods, thermoforming, fluidized bed coating	Street light globes, centrifuge bottles, high-temperature lenses, hot dish handles
Polychlorotrifluro-ethylene (CTFE)	1938	H	E	VG	VG	VG	VG	Molded by all conventional techniques	Wire insulation, chemical ware, pipe lining, pipe, process equipment lining
Polyester-Reinforced Urethane	1937	H		G	G	G	G	Compression molded over a wide temperature range	For heavy-duty leather applications—industrial applications
Polyimides	1964	H-M	E	G-VG	P	P	G-VG	Molded in a nitrogen atmosphere	Bearings, compressors, valves, piston rings

Table 3.41, continued

Plastic Material	First Introduced	Strength	Electrical Properties	Acids	Bases	Oxidizing Agents	Common Solvents	Product Manufacturing Methods	Common Applications
Polyolefin Plastics Ethlene Vinyl Acetate (EVA)	1940	H		G	G	G-F	G-F	Most conventional processes	Molded appliance and automotive parts, garden hose, vending machine tubing
Polyallomers	1962	H	G-VG	F	F	F	F	Molding processes, all thermoplastic processes	Chemical apparatus, typewriter cases, bags, luggage shells, auto trim
Polyethylene	1939	H	VG	G-VG	G-VG	P	P	Injection, blow, extrusion and rotational	Pipe, pipe fittings, surgical implants, coatings, wire and cable insulation
Polypropylene Plastics	1954	H-M	VG	VG	VG	F	F	Same as PVC	Housewares, appliance parts, auto ducts and trim, pipe, rope, nets
Polyphenylene Oxide	1964	M	F-G	E	E	VG	VG	Extruded, injection molded, thermoformed and machined	Autoclavable surgical tools, coil forms, pump housings, valves, pipe
Polysulfone	1965	M	VG	VG	VG	F	P-F	Extrusion and injection molded	Hot water pipes, lenses, iron handles, switches, circuit breakers

Polyvinylidene Fluoride (VF_2)	1961	H	VG+	G-VG	G	G-VG	G-VG	Molded by all processes, fluidized bed coatings	High-temperature valve seats, chemical resistant pipe, coated vessels, insulation
Styrene Plastics ABS Plastics	1933	M-H	VG+	G-VG	G-VG	F-G	F	Thermoforming, injection, blow, rotational and extrusion molds	Business machine and camera housings, blowers, bearings, gears, pump impellers
Polystyrene	1933	M-H	VG+	G	G	F	P-F	Most molding processes	Jewelry, light fixtures, toys, radio cabinets, housewares, lenses, insulators
Styrene Acrylonitrile (SAN)		H	VG	VG	G	G	G	Most molding processes	Lenses, dishes, food packages, some chemical apparatus, batteries, film
Urethane	1955	M-H+		G-VG	G	G	F-G	Extruded and molded	Foams for cushions, toys, gears, bushings, pulleys, shock mounts
Vinyl Plastics,	1835								
Compolymers of Vinyl Acetate and Vinyl Chloride,	1912	M+		G	G-F	G	G	All molding processes	Floor products, noise insulators
Polyvinyl Acetate	1928	M		P-G	G	G	P	Coatings and adhesives	Adhesives, insulators, paints, sealer for cinder blocks

Table 3.41, continued

Plastic Material	First Introduced	Strength	Electrical Properties	Acids	Bases	Oxidizing Agents	Common Solvents	Product Manufacturing Methods	Common Applications
Polyvinyl Aldehyde	1940	H		VG	VG	VG	VG	Most molding processes	Used for coatings and magnet wire insulation, interlayer of safety glasses
Polyvinyl Chloride (PVC)	1940	M-H		VG	G	G	G	Extrusion, injection, rotational, slush, transfer, compression, blow mold	Pipe conduit and fittings, cable insulation, downspouts, bottles, film
PVC Plastisols	1940	M-H		VG	G	G	G	Slush and rotationally molded, foamed, extruded	Used in coating machines to cover paper, cloth and metal
Polyvinylidene Chloride	1940	H		VG	VG	VG	VG	Same as PVC	Auto seatcovers, film, bristles, pipe and pipe linings, paperboard coatings

[a]H = high.
[b]P = poor.
[c]G = good.
[d]E = excellent.
[e]M = moderate.
[f]A = average.

Table 3.42. Mechanical Properties of Thermoplastics [55]

	Polyethylene	Polypropylene	PVC[a]	ABS[a]	PTFE[a]	Acrylics	Nylon 66	Acetal
Specific Gravity	0.93	0.90	1.4	1.05	2.20	1.2	1.15	1.4
Tensile Strength (N/mm^2)	10	34	55	34	21	70	83	70
Elongation at Break (%)	500	300	15	50	300	5	100	70
Tensile Modulus (N/mm^2)	170	1360	3100	2100	415	3450	2760	2900
Thermal Expansion ($10^{-3}/°C$)	15	11	7	10	10	7	10	10

[a]PVC = polyvinychloride; ABS = acrylonitrile butadiene styrene; PTFE = polytetrafluorenethylene.

Table 3.43. Hydrostatic Design Pressures for Thermoplastic Pipe for Temperatures up to 130°C [55]

	Maximum Hydrostatic Design Pressures, N/mm^2, for life of 10 years						Minimum Temperature of Usage[a]
	20°C	40°C	60°C	80°C	100°C	120°C	°C
Low-Density Polyethylene	2.7	1.7					−40
High-Density Polyethylene	4.8	3.9					−20
Polypropylene							
Homopolymer	6.9	4.1	2.2	1.2	1.0		−1
Copolymer	5.9	3.2	1.7	0.7			−5
CPVC[b]	13.8		6.9	3.5	1.1		−1
High-Impact PVC[b]	6.2	3.1					−20
ABS[b]	11.0		5.5	1.6			−30
PVF[b]	9.0	7.7	5.9	4.8	3.4	2.4	

[a]Temperature below which the pipe is very brittle.
[b]PVC = polyvinylchloride; ABS = acrylonitrile butadiene styrene; CPVC = chlorinated PVC; PVF = polyvinylfluoride.

Table 3.44. Effect of Density on Poleythylene Polymers [55]

	Polyethylene Density, g/cm^3					Polypropylene (0.90)	
	0.92	0.93	0.94	0.95	0.96	Copolymer	Homopolymer
Crystallinity (%)	55	62	70	77	85		
Tensile Modulus, (N/mm^2)	170	275	450	625	850	1300	1500
ASTM Type[a]	I		II		III		
Melting Point (°C)	110				135	165	175
Heat Distortion Temperature (°C)	40	50	60	70	85	100	105

[a]D1248: Polyethylene plastics molding and extrusion materials.

Low-density polyethylene, a tough, relatively flexible material, is used at temperatures up to 50°C and does not become brittle until the temperature falls to −40°C.

This material is resistant to most hot, highly oxidizing inorganic acids,

Table 3.45. Effects of Degree of Crystallinity and Molecular Weight [55]

Increase in Density (crystallinity)	Decrease in Melt Index	Basic Properties Unaffected by Density and MI
Increases	Increases	
Elastic modulus	Resistance to environmental stress cracking	Corrosion resistance, thermal properties, electrical properties, refractive index, decomposition temperature
Stress at yield	Tensile strength	
Surface hardness	Elongation at break	
Softening and melting temperature		
Impermeability to gases		
Decreases	Decreases	
Toughness	Temperature at which brittleness occurs	
Liquid absorption		

alkalis and aqueous solutions of inorganic salts. Even though polyethylene is not actually dissolved by any organic substances at temperatures below 50°C, it is not a practical material for use in contact with many solvents (among them are chlorinated solvents and aromatics) because of its marked swelling. Although polar liquids such as alcohols, esters, amines and phenols are not solvents suitable for use with polyethylene and do not cause swelling, they may cause environmental stress cracking. This occurs when polyethylene is stressed by either external loads or internal molding strains in contact with these solvents.

High-density polyethylene ($\rho \cong 0.94$–0.96 g/cm^3) has up to five times the stiffness of low-density polyethylene at ambient temperatures and can be used at much higher temperatures. Its chemical resistance is similar to that of the low-density grades, but the resistance to swelling by solvents is higher.

High-density polyethylene is very susceptible to environmental stress corrosion cracking, especially if used at the high end of the temperature range.

The chemical resistance of polypropylene is similar to that of polyethylene. Its standard grade is suitable for use at temperatures up to 90°C. All commercial grades of polypropylene contain an antioxidant, whose concentration in the polymer determines the maximum working temperature of equipment made from its high grades. The stiffness of polypropylene can be improved by incorporation of asbestos and glass fibers. Compared with polyethylenes, polypropylene has the great advantage of not being subject to environmental stress cracking.

The copolymer is safer to use in most process plant equipment where

creep strength is low. However, for long life under pressure, particularly at the higher end of the temperature range, the homopolymer is preferred.

3.16.2 Polyvinyl Chloride (PVC)

PVC, the polymerization product of chlorine-substituted ethylene derivatives, is probably the most widely used plastic for process plant construction. It is available in four different types: rigid, high impact, high temperature and plasticized.

3.16.3 Rigid PVC (UPVC)

This is used most often in process plants. It is a tough, low-cost material with probably the widest range of chemical resistance of any of the low-cost plastics. On a volume basis, PVC is more favorable than polypropylene because the modulus of PVC is considerably higher than that of polypropylene, so it will form more rigid structures when used at the same thickness. On a weight basis it is not as favorable as PVC because it has a specific gravity of 1.4 compared with 0.92 for polypropylene.

The maximum temperature at which PVC can be used unsupported is 60°C. However, it can be used up to 100°C by external reinforcement with glass-reinforced polyester or epoxy resin. At low temperatures, rigid PVC becomes brittle and, in this case, a high-impact PVC should be used. Rigid PVC not suffering from environmental stress cracking is very resistant to most nonhighly oxidizing inorganic acids and alkalis. It is attacked by halogen gases, particularly when they are damp. PVC is much better than polyolefins for resistance to mineral oils, petrol and paraffin, but absorbs and is swollen by aromatic hydrocarbons, chlorinated solvents, esters and ketones.

This plastic is used widely in extruded forms such as sheet, pipe and rod, and as injection moldings such as pipe fittings [56-58].

3.16.4 High-Impact PVC

These compounds are particularly advantageous for equipment exposed to low temperatures. This plastic containing chlorinated ethylene does not differ significantly in chemical resistance from rigid PVC, but does have a slightly lower creep strength.

3.16.5 Chlorinated PVC (CPVC)

This is used at temperatures up to 100°C and has similar chemical resistance impact. Presumably it will supersede normal PVC because of its superior tolerance to higher temperatures.

3.16.6 Plastic PVC

Produced from PVC compounds containing plasticizers such as dioctyl phthalate, this is a flexible sheeting suitable for lining tanks made from steel and concrete. The maximum temperature at which this lining can be used is 60°C.

Some solvents, including aromatic and chlorinated hydrocarbons, ketones and ethers, will soften the sheet by acting as additional plasticizers.

3.16.7 Acrylonitrile-Butadiene-Styrene (ABS)

ABS, a tough rigid plastic, is widely used as sheet, pipe and pipe fittings. ABS's chemical resistance is slightly inferior to rigid PVC. It has good impact and low-temperature properties similar to those of high-impact PVC, but has better resistance than rigid PVC to high temperatures (up to 80°C).

3.16.8 Fluorinated Plastics

Fluorinated polymers stand out sharply against other construction materials for their excellent corrosion resistance and high-temperature stability. In this respect they are not only superior to other plastics but also to platinum, gold, glass, enamel and special alloys. The fluorinated plastics used in process plants are polytetrafluorethylene (PTFE), fluorinated ethylene/propylene (FEP), polytrifluoromonochlorethylene (PTFCE) and polyvinyl fluoride (PVF). They are much more expensive than other polymers and so are only economical in special situations [59].

In addition to excellent corrosion resistance at temperatures up to 250°C, PTFE has a very low coefficient of friction. Therefore, it is widely used for metal lining, self-lubricating bearings, seals, etc. PTFE has a very low mechanical strength and so should be loaded only lightly. Its creep strength can be increased by using fillers (glass and carbon fibers). PTFE can be used in contact with all chemicals except molten alkali metals, fluorine and chlorine trifluoride. Unlike PTFE, fluorinated ethylene propylene (FEP) can be extruded and injection molded. Therefore, FEP is available in a greater variety of forms than PTFE and can be used up to 200°C. The PTFE and FEP coatings do not protect metal from corrosion as they are porous.

PTFCE (or CTFC) can be applied as a porous-free coating where the highest corrosion resistance is required.

3.16.9 Polyvinyl Fluoride (PVF)

PVF is a rigid plastic with corrosion resistance over a much wider range of conditions (it can be used with most chlorinated solvents up to 100°C) and temperature (−60° to 150°C).

3.16.10 Acrylics

Acrylics are used in applications in which transparency is necessary and breakage is likely to occur. It is tougher than glass and can be used in the temperature range from -40°C to +85°C.

Acrylics are chemically resistant at room temperature to dilute acids, except hydrofluoric and hydrocyanic, all alkalis and mineral oils. They are attacked by chlorinated solvents, aromatic hydrocarbons, ketones, alcohols, ethers and esters [60].

3.16.11 Chlorinated Polyether

Chlorinated polyether used in temperatures up to 120°C in forms of coatings, extruded pipe and sheet linings is an intermediate between the low-cost commodity polymers such as PVC and polyethylene, and fluorinated polymers [61].

3.16.12 Nylon (Polyamide)

Nylons, long-chain synthetic polymeric amides, are fabricated in many different types. The most commonly used forms are described in Table 3.46.

High stiffness, fair resistance to corrosion and good frictional properties sometimes make nylons more attractive than metals. The stiffness of the polymer may be increased by glass filling. Nylons containing molybdenum

Table 3.46. Properties of Different Nylons [62]

	Type Nylon				
		Glass Filled			
	66	66	8	610	11
Density (g/cm^3)	1.14	1.4	1.13	1.09	1.04
Melting point (°C)	260		220	220	190
Moisture Absorption (%)					
Equilibrium at 100% RH	8	5.5	11	3.5	1.5
Elastic Modulus (N/mm^2)					
Dry	3000	7500	2750	1750	1250
Wet	1200	2500	700	1100	900
Tensile Strength (N/mm^2)	85	170	80	60	60
Elongation at Break (%)	60	3	100	100	100
Heat Distortion Temperature (°C) (204 psi ASTM D648)	75	245	70	55	50

disulfide or graphite can be used over the temperature range of -50° to +75°C. Nylons are resistant at room temperature to very dilute acids, alkalis up to 20% concentration, esters, alkyl halides, mercaptans, glycols, aldehydes (except formaldehyde), mineral oils and petroleum fuels. They are attacked by halogens and halogenated compounds, as well as phenols and chesols.

3.16.13 Miscellaneous Engineering Plastics

To overcome the disadvantages of nylon as an engineering material–high water absorption and poor creep strength at elevated temperatures–many newer polymers were developed. Table 3.47 lists polymers that are among the most commercially important: acetal, polycarbonate, polyphenylene oxide and polysulfone.

3.16.14 Acetal Resin

This has the same stiffness as dry nylon but absorbs less than one-fifth the amount of water and retains its strength and shape in humid conditions at considerably higher temperatures. Acetal has poor resistance to aqueous solutions of strong acids and should not be used at a pH below 3. The acetal's copolymers are satisfactory in most alkaline conditions. All grades have very good resistance to mineral oils and petrols and to most organic solvents including chlorinated compounds.

Table 3.47. Properties of Different Engineering Plastics

	Acetal	Polycarbonate	Polyphenylene Oxide	Polysulfone	Nylon 66
Tensile yield stress (N/mm^2)	70	60	60	70	70
Elongation at fracture (%)	60	80	25	75	60
Elastic Modulus (dry) (N/mm^2)	2800	2500	2500	2500	3000
Heat Deflection Temperature (°C) at 1.8 N/mm^2 (264 psi)	110	135	130	175	75
Water Absorption, 24 hr at 100% RH	0.22	0.15	0.07	0.22	1.5
Equilibrium Immersion	0.8	0.35	0.15		8
UL Temperature Index (°C)	80	115	105	140	65

3.16.15 Polycarbonate

This has a very high resistance to impact damage, even at subzero temperatures. It has good creep strength in dry conditions up to 115°C but degrades by continuous exposures to water hotter than 65°C. It is resistant to aqueous solutions of acids, aliphatic hydrocarbons, paraffins, alcohols (except methanol), animal and vegetable fats and oils, but is attacked by alkalis, ammonia, aromatic and chlorinated hydrocarbons.

3.16.16 Polyphenylene Oxide

A stable material in humid conditions at temperatures up to 105°C, polyphenylene oxide is resistant to most aqueous solutions of acids and alkalis but is attacked by many organic solvents, particularly by aromatics and chlorinated aliphatics.

3.16.17 Polysulfone

Used at temperatures up to 140°C, polysulfone has good resistance to aqueous solutions of acids and alkalis; it is satisfactory with aliphatic solvents but is swollen by aromatics and stress cracked by several organic solvents, including acetone, ethyl acetate, trichlorethylene and carbon tetrachloride.

3.17 THERMOSETTING PLASTICS

The thermosetting plastics–phenolics, polyesters and epoxies–are used at higher temperatures (about 150°C) and pressures than thermoplastics. They are finding ever increasing applications for process plant equipment.

Thermosetting resins are available as powders and liquids. The powders can be molded in a similar manner to thermoplastics and are used in process plants where large numbers of small items are required (for example, packing rings).

Liquid resins are usually reinforced with fibers (glass, asbestos), because of their brittleness. They are almost always used for process plant construction. As liquid resins they can be catalyzed to cure at room temperature and low pressures. Relatively cheap wooden molds are required to build quite large items such as tanks and ducting on a one-off basis. The principal materials in this group of plastics are described below.

3.17.1 Phenolic Resins

Phenoplasts manufactured on the basis of thermoreactive phenolformaldehyde resin, harden on heating up to 120-170°C and then become insoluble. They are usually reinforced with asbestos fiber.

The phenolic/asbestos laminates (used up to 200°C) have excellent resistance to most mineral and organic acids but are attacked by strong oxidizing agents such as nitric and concentrated sulfuric acids and strong alkalis such as sodium and potassium hydroxide. Tanks, scrubbers, columns, pumps, pipes, etc., are fabricated from phenolic/asbestos laminates.

3.17.2 Polyester Resins

Polyester resins, reinforced with glass fibers, are used widely in the construction of process equipment. Some physical and mechanical properties are presented in Table 3.48. Table 3.49 lists various materials used as filler and the properties they impart to different plastics.

There are four types of polyester resins available: orthophthaleic, isophthaleic, biphenol and chlorinated. The general purpose orthophthaleic resins do not have adequate resistance to corrosion for most process plant requirements. Isophthaleic resins can be used up to 60°C. They are corrosion resistant to most organic and mineral (up to 25%) acids, salts that are not strongly alkaline, aliphatic solvents and petroleum products, but not to aromatics, strongly oxidizing acids, hot distilled water and strong alkalis [63,64].

The biphenol polyesters, being considerably more expensive than isophthaleics, have better chemical resistance to strong alkaline solutions and oxidizing solutions. For about the same price as the biphenols, the

Table 3.48. Various Properties of Fiberglass Resins

Property	Polyester/ Glass Mat	Polyester/ Woven Glass Cloth	Epoxy/ Woven Glass Cloth	Epoxy/ Filament Wound Glass Rovings
Glass (%w/w)	25	60	60	70
Specific Gravity	1.5	1.7	1.7	1.8
Thermal Expansion, $\times 10^{-6}$ °C	25	12	12	11
Modulus of Elasticity (kN/mm^2)	7	15	18	20
Flexural Strength (N/mm^2)	125	345	415	70

Table 3.49. Various Filler Materials and

Filler Material	Chemical Resistance	Heat Resistance	Electrical Insulation	Impact Strength	Tensile Strength
Alumina Powder					
Alumina Trihydrate			X		
Asbestos	X	X	X	X	
Bronze					
Calcium Carbonate		X			
Calcium Silicate		X			
Carbon Black		X			
Carbon Fiber					
Cellulose				X	X
Alpha Cellulose			X		X
Coal (powdered)	X				
Cotton (chopped fibers)			X	X	X
Fibrous Glass	X	X	X	X	X
Graphite	X				X
Jute				X	
Kaolin	X	X			
Mica	X	X	X		
Molybdenum Disulfide					
Nylon (chopped fibers)	X	X	X	X	X
Orlon®	X	X	X	X	X
Rayon			X	X	X
Silca, Amorphous			X		
TFE-Fluorocarbon					
Talc	X	X	X		
Wood Flour			X		X

chlorinated resins are nonflammable. The addition of fire-retardant compounds–chlorine or bromine–can reduce the flammability of other polyester resins.

3.17.3 Epoxy Resins

The fully glass-reinforced epoxy laminates have much higher strength and corrosion resistance to solvents and alkalis than do polyester laminates, but are more expensive. They are used in the process industries for manufacturing piping to be used for very high working pressures by filament winding techniques with glass rovings.

3.17.4 Furane Resins

Furane resins are superior to polyesters and epoxies for resistance to ketones, chlorinated solvents and carbon disulfide. However, as they are

Their Property Contributions to Plastics [54]

Dimensional Stability	Stiffness	Hardness	Electrical Conductivity	Thermal Conductivity	Moisture Resistance	Handleability
			X	X		
	X				X	X
X	X	X				
	X	X	X	X		
X	X	X				X
X	X	X				
X	X		X	X		X
			X	X		
X	X	X				
X					X	
X	X	X				
X	X	X			X	
X	X	X	X	X		
	X					
X	X	X			X	X
X	X	X			X	
	X	X			X	X
X	X	X				X
X	X	X		X	X	
X	X	X				
					X	X
X	X	X				
X	X	X			X	X
X						

very brittle resins, they are difficult to make into self-supporting laminates, so often are used as an inner layer to glass-reinforced polyester laminates [65].

3.17.5 Rubber Linings

Rubber, natural and synthetic, has been used extensively for many years in chemical process plants. Rubber is a product obtained by thermal processing (vulcanization) of a mixture of raw natural synthetic caoutchouc with sulfur.

Soft rubber is obtained by adding 2–4% sulfur; by adding extra sulfur (25–40%), the rubber can be made into ebonite, which is a hard, brittle material, having a wider range of chemical resistance than soft rubber. Soft ordinary rubber is chemical and erosion resistant, but its thermal resistance is not high (about 80°C).

Neoprene, which is basically polychloroprene, has better resistance to heat than does natural rubber (up to 105°C), and has better resistance to mineral and vegetable oils and fatty acids. It is attacked by aromatic and

halogenated hydrocarbons. Butyl rubber, basically polyisobutylene, is used as a heat-resistant, impermeable material. It is better than natural rubber when in contact with oxidizing acids, such as dilute solutions of nitric acid. It is attacked by free halogens, chlorinated and aromatic hydrocarbons and petroleum oils.

Nitrile rubbers, copolymers of butadiene and acrylonitrile, are used for resistance to swelling by mineral oils and fuels enhanced by formulations with a high acrylonitrile/butadiene ratio. They have poor resilience and low-temperature properties. However, these rubbers should not be used with ketones, phenols or aromatic hydrocarbons [66-69].

Hypalon, chlorosulfated polyethylene, is particularly noted for its resistance to strong oxidizing materials such as sodium hypochlorite, chromic and nitric acids. It has good resistance to mineral and vegetable oils but is not recommended for use with aromatic and chlorinated hydrocarbons.

Fluorinated rubbers, copolymers of hexafluoropropylene and vinylidene-fluorides, have excellent resistance to oils, fuels and lubricants at temperatures up to 200°C. They have better resistance to aliphatic, aromatic and chlorinated hydrocarbons and most mineral acids than other rubbers, but their high cost restricts their engineering applications. Cheremisinoff et al. [54] provide extensive physical and mechanical properties data on engineering plastics. A glossary of terms concerned with fabrication and properties of plastics is given in the last section of this chapter.

3.18 ORGANIC COATINGS AND PAINTS

Organic coatings are applied mainly to mild steel structures and equipment. They are also used on aluminum, zinc-sprayed and galvanized steel, but to a lesser extent. The applications for organic coatings can be divided into three areas: corrosion by atmospheric pollution, protection from splash by process liquors, and linings for immersion in process liquors [70-74].

Application of protective paints consists of surface preparation of steel, priming coat and finishing coats. Wherever possible, steel should be blast-cleaned before painting. Primers thoroughly wet the metal to promote adhesion of finishing paints and carry inhibitive pigments. For example, red lead oxide will minimize the spread of rust on metal surfaces. The total thickness of finishing coats must be at least 0.125 mm for adequate protection and life. Four coats of paint usually are necessary to achieve this.

Paints based on phenolic resins are oil modified to permit drying at ambient temperatures. They are very suitable for most industrial atmospheres. Paints with a higher standard of chemical resistance are required for equipment that is splashed by corrosive process liquors.

Chlorinated rubber paints and vinyl paints have excellent resistance to high concentrations of acids and alkalis at temperatures up to 80°C. High-build chlorinated rubber paints, which give a thickness of 0.12 mm per coat are commonly used for process plant equipment.

Epoxy resin paints, inferior to chlorinated rubber for resistance to strong acids, are excellent for dilute acids and strong alkalis. They produce a harder, more abrasion-resistant coating than does chlorinated rubber and are much better for resistance to fats, oils and many organic solvents. Table 3.50 gives data on the chemical resistance of epoxy resin coatings to different materials.

Chemical-resistant finishing paints are frequently used under immersion conditions; however, they are not used in cases in which pinholes in the coating might lead to catastrophic corrosion of the underlying metal. Coatings for immersion require special equipment for application (ovens for high-temperature curing, tanks for dipping or special guns for spraying), but they provide the solution of complete elimination of porosity.

Stoved phenolics have outstanding acid resistance (up to 200°C in dry conditions and up to 100°C in wet conditions), except to strong oxidizing acids. They are unsuitable for use with alkaline solutions above pH 10, wet chlorine or hypochlorite solutions. Phenolics/silicon formulations can be used for steam up to 180°C without a significant effect on heat transfer rates.

Polyester/glass-flake linings can be applied onsite because they cure at ambient temperature. Their corrosion resistance depends on the type of polyester resin used.

PVC plastisol coatings are tough, with an abrasion resistance similar to rubber. They are resistant to acids and alkalis but usually are not suitable for solvents because of extraction of the plasticizers in the coating.

Most plastics are now available as powders and can be applied as coatings by fluidized bed or spraying techniques. Nylon 11 and polyethylene have proved most useful for chemical plant applications.

3.19 GLOSSARY OF FABRICATION AND PLASTICS TERMS

A-stage	Initial or early stage in the reaction of some thermosetting resins in which the material is still soluble in certain liquids and fusible; referred to as resol.
Acid-acceptor	Chemical that acts as a stabilizer by chemically combining with an acid that may be present initially in trace quantities in a plastic; also may be formed via decomposition of the resin.

Table 3.50. Chemical Resistance of Epoxy Resin Coatings [54]

Material	Concentration (%)	Temperature (°C) 5	15	27	38	49	60	71	82
Acetic Acid	1-5	G[a]	G	F[b]	F	F	F	F	P[c]
	5-10	F	F	P	P	P	NR[d]	NR	NR
	10-50	NR	NR	NR	NR	NR	NR	NR	NR
Acetone	1-5	G	G	G	F	F	F	P	P
	10-20	F	F	F	P	P	NR	NR	NR
Alcohols (ethyl)	–[e]	X[f]	X	G	G	F	F	P	P
Alum Sulfate	–	X	X	X	X	X	X	X	X
Ammonium Chloride	–	X	X	X	X	X	X	X	X
Ammonium Fluoride	–	X	X	X	X	X	X	X	X
Aromatic Solvents	–	X	X	X	X	G	G	G	F
Beer	–	X	X	X	X	X	X	X	X
Black Liquor	–	X	X	X	X	X	X	X	X
Boric Acid	1-5	X	X	X	G	G	G	F	F
Calcium Chloride	1-50	X	X	X	X	X	X	G	G
Carbon Tetrachloride	–	X	X	G	G	G	G	F	F
Chromic Acid	1-5	F	F	NR	NR	NR	NR	NR	NR
Citric Acid	1-5	F	F	F	G	G	G	G	F
Cooking Oils	–	X	X	X	X	X	X	X	G
Copper Salts	–	X	X	X	X	X	X	X	X
Esters	–	X	X	X	X	X	X	X	X
Esters (ethyl ether)	–	X	X	X	X	X	G	G	G
Formaldehyde	1-35	X	X	X	X	X	X	X	X
Ferric Chloride	–	X	X	X	X	G	G	G	F
Ferrous Salts	–	X	X	X	X	X	X	X	X
Gasoline	–	X	X	X	X	X	X	X	G
Glycerin	–	X	X	X	X	X	X	X	X
Hydrochloric Acid	1-5	X	X	X	G	G	F	F	F
Hydrofluoric Acid	1-5	G	G	G	P	P	NR	NR	NR
Kerosene	–	X	X	X	X	X	X	X	G
Lactic Acid	1-10	X	X	X	G	G	G	F	F
Lead Acetate	–	X	X	X	X	X	X	X	G
Manganese Salt	–	X	X	X	X	X	X	X	G
Methyl Ethyl Ketone	1-5	G	G	G	F	F	NR	NR	NR
Mineral Spirits	–	X	X	X	X	G	G	G	F
Naptha	–	X	X	X	X	X	X	X	X
Nitric Acid	1-5	F	F	P	P	P	P	NR	NR
	10-20	P	P	P	NR	NR	NR	NR	NR
Oxalic Acid	Saturated	G	G	G	F	F	NR	NR	NR
Phosphoric Acid	20	F	F	P	P	NR	NR	NR	NR
Potassium Hydroxide	–	X	X	X	X	X	X	X	X
Salt Brine	–	X	X	X	X	X	X	X	G
Soaps	–	X	X	X	X	X	X	X	G
Detergents	–	X	X	X	X	X	X	X	G
Sodium Chromate	–	X	X	X	X	X	X	X	G

Table 3.50, continued

Material	Concentration (%)	Temperature (°C) 5	15	27	38	49	60	71	82
Sodium Dichromate	–	G	G	G	G	G	G	F	F
Sodium Fluoride	–	X	X	X	X	X	X	X	X
Sodium Hydroxide	1-10	X	X	X	X	X	X	X	G
	50	X	X	X	G	G	G	G	F
Sodium Hypochlorite	3	G	G	F	P	P	NR	NR	NR
Sodium Phosphate	–	X	X	X	X	X	X	X	X
Sodium Sulfate	–	X	X	X	X	X	X	X	X
Sodium Sulfite	–	X	X	X	X	X	X	X	X
Sodium Thiosulfate	–	X	X	X	X	X	X	X	X
Sulfite Liquor	–	X	X	X	X	X	X	X	X
Sulfuric Acid	1-5	X	X	X	G	G	F	F	P
	10-20	X	X	P	P	NR	NR	NR	NR
Vegetable Oils	–	X	X	X	X	X	X	X	X
Water (fresh)	–	X	X	X	X	X	X	X	X
Water (distilled)	–	X	X	X	X	X	G	G	G
White Liquor	–	X	X	X	X	X	X	X	G

[a]G = good.
[b]F = fair.
[c]P = poor.
[d]NR = not recommended.
[e]– = all conditions.
[f]X = excellent.

Acrylic plastics — Group of plastics based on resins generated from the polymerization of acrylic monomers (e.g., ethyl acrylate and methyl methacrylate).

Adherend — A component or body held to another body by an adhesive.

Adhesion — Condition in which two surfaces are bonded together by interfacial forces caused by valence forces or interlocking forces or both (see mechanical adhesion and specific adhesion).

Adhesion, mechanical — Bonding between two surfaces caused by interlocking action of molecules.

Adhesion, specific — Adhesion between surfaces whereby valence forces predominate that are similar to those promoting cohesion.

Adhesive	Material that holds parts together by surface attachment. Examples include glue, mucilage, paste and cement. Various forms of adhesives include liquid or tape adhesives (physical type) and silicate or resin adhesives (chemical type).
Adhesive, assembly	Adhesive for bonding materials together, e.g., boat, airplane, furniture, etc.; term commonly used in wood chemistry to distinguish between 'joint glues' and veneer glues. Term applied to adhesives employed in fabricating finished goods, differs from adhesives used in fabricating sheet materials such as laminates or plywood.
Aging	The effect of exposure of plastics to the environment for a length of time. The specific effect and degree depend on the moisture in, and temperature and composition of, the environment, in addition to the length of exposure.
Alkyd plastics	Group of plastics composed of resins based on saturated polymeric esters whereby the recurring ester groups are an integral part of the primary polymer chain and the ester groups exist in cross-links that are present between chains.
Allyl plastics	Group of plastics composed of resins formulated by addition polymerization of monomers containing allyl groups (e.g., diallyl phthalate).
Amino plastics	Group of plastics generated by the condensation of amines (e.g., urea and melamine with aldehydes).
Anneal	As applied to molded plastics, the process of heating material to a specified temperature and slowly cooling it to relieve stresses.
Assembly	The positioning or placing together in proper order layers of veneer or other materials, with adhesives, for purposes of pressing and bonding into a single sheet or unit.
Assembly time	Refers to the elapsed time after an adhesive is applied until pressure effects curing.
B-stage	Intermediate-stage reaction step for various thermosetting resins. During this stage the material swells when in contact with certain liquids and

	becomes soft when heat is applied. The material may not dissolve or fuse entirely. Resin in this stage is referred to as resitol.
Back-pressure-relief port	Opening from an extrusion die used for excess material to overflow.
Binder	Part of adhesive composition responsible for adhesive forces.
Blanket	Veneers laid up on a flat table. Complete assembly is positioned in a mold at one time; used primarily on curved surfaces to be molded by the flexible bag process.
Blister	Elevation of the surface of a plastic caused by trapped air, moisture, solvent; can be caused by insufficient adhesive, inadequate curing time, excess temperature or pressure.
Blocking	Adhesion between layers of plastic sheets in contact; condition arises during storage or use when components are under pressure.
Bloom	Visible exudation or efflorescence on the surface of a plastic; caused by plasticizer, lubricant, etc.
Bolster	Spacer or filler material in a mold.
Bond	The attachment at the interface or exposed surfaces between an adhesive and an adherend; to attach materials together with adhesives.
Bulk density	Density of a molding material in loose form, such as granular, nodular, etc., with units in g/cm^3 or lb/ft^3.
Bulk factor	Ratio of the volume of loose molding compound to the volume of the same amount in molded solid form; ratio of density of solid plastic component to apparent density of loose molding compound.
Case harden	Process of hardening the surface of a piece of steel to a relatively shallow depth.
Cast film	Film generated by depositing a layer of liquid plastic onto a surface and stabilizing by evaporating the solvent, by fusing after deposition or by cooling. Cast films are generated from solutions or dispersions.

Catalyst	Material used to activate resins to promote hardening. For polyesters, organic peroxides are used primarily. For epoxies, amines and anhydrides are used.
Cavity	Portion of a mold that forms the outer surface of the molded product.
Cell	Single cavity caused by gaseous displacement in a plastic.
Cellular plastic	A plastic that suffers a density decrease by the presence of numerous cells dispersed throughout the material.
Cellular striation	Layering of cells within a cellular plastic.
Cellulosic plastics	Group of plastics composed of cellulose compounds, for example esters (e.g., cellulose acetate) and ethers (e.g., ethyl cellulose).
Centrifugal casting	Process in which tubular products are fabricated through the application of resin and glass strand reinforcement to the inside of a mold that is rotated and heated. The process polymerizes the resin system.
Chalking	Dry, chalk-like deposit on the surface of a plastic.
Chase	Main portion of the mold containing the molding cavity, mold pins, guide pins, etc.
Chemically formed plastic	Cellular plastic whereby the material's structure is formed by gases generated from the chemical reaction between its constituents.
Clamping plate	Mold plate that matches the mold and is used to fasten the mold to the machine.
Closed-cell foam	Cellular plastic composed predominantly of non-interconnecting cells.
Cohesion	Forces binding or holding a single material together.
Cold flow	Creep: the dimensional change of a plastic under load with time followed by the instantaneous elastic or rapid deformation at room temperature; permanent deformation caused by prolonged application of stress below the elastic limit.

Cold molding	The fashioning of an unheated mixture in a mold under pressure. The article is then heated to effect curing.
Cold pressing	Bonding process whereby an assembly is subjected to pressure without applying heat.
Cold slug	Material to first enter an injection mold.
Cold-slug well	Section provides opposite sprue opening of the injection mold, used for trapping cold slug.
Condensation	Chemical reaction whereby two or more molecules combine and separate out water or other substance. When polymers are formed, it is referred to as polycondensation.
Consistency	Resistance of a material to flow or to undergoing permanent deformation under applications of shearing stresses.
Contact molding	Process whereby layers of resin-impregnated fabrics are built up one layer at a time onto the mold surface, forming the product. Little or no pressure is required for laminate curing.
Copolymer	Formed from two or more monomers (see polymer).
Core	Portion of the mold that forms the inner surfaces of the molded product.
Core and separator	Center section of an extrusion die.
Core pin	Pin for molding a hole.
Core-pin plate	Plate that holds core pins.
Crazing	Tiny cracks that develop on a laminate's surface. Caused by mechanical or thermal stresses.
Creep	See cold flow.
Cross linking	Generation of chemical linkages between long-chain molecules; can be compared to two straight chains joined together by links. The rigidity of the material increases with the number of links. The function of a monomer is to provide these links.
C-stage	Final reaction stage of various thermosetting resins. In this stage material is insoluble and infusible. Resin in fully cured thermosetting

	molding is in this stage and is referred to as resite.
Cull	Remaining material in the transfer vessel after the mold has been filled.
Cure	Process in which the addition of heat, catalyst or both, with or without pressure, causes the physical properties of the plastic to change through a chemical reaction. Reaction may be condensation, polymerization or addition reactions.
C-veil	Thin, nonwoven fabric composed of randomly oriented and adhered glass fibers of a chemically resistant glass mixture.
Degradation	Deleterious change in a plastic's chemical structure.
Delamination	Separation of a laminate's layers.
Deterioration	Permanent adverse change in the physical properties of a plastic.
Diaphragm gate	Gate employed in molding tubular or annular products.
Die-adaptor	Piece of an extrusion die that serves to hold die block.
Die block	Part of extrusion die that holds the core and forming bushing.
Die body	Part of an extrusion die used to separate and form material.
Dilatant	Property of a fluid whose apparent viscosity increases with shear rate.
Dished	Displays a symmetrical distortion of a flat or curved section; as viewed, it appears concave.
Dispersant	In an organosol, the liquid constituent that displays solvating or peptizing action on the resin; subsequent action aids in dispersing and suspending resin.
Dispersion	Heterogeneous mixture in which finely divided material is distributed throughout the matrix of another material. Distribution of finely divided solids in a liquid or a solid (e.g., pigments, fillers).
Doping	Coating a mandrel or mold with a material that prevents the finished product from sticking to it.

Dowel	Pin that maintains alignment between the various sections of a mold.
Draft	Angle of clearance between the molded article and mold, allowing removal from the mold.
Dry spot	Incompleted area on laminated plastics; the region in which the interlayer and glass are not bonded.
Durometer hardness	A material's hardness as measured by the Shore Durometer.
Ejector pin	Pin or dowel used to eject molded articles from a mold.
Ejector-pin-retainer plate	Receptacle into which ejector pins are assembled.
Elasticity	Property of materials whereby they tend to retain or recover original shape and size after undergoing deformation.
Elastomer	A material under ambient conditions which can be stretched and, on release or with applied stress, returns with force to its approximate original size and shape.
Epoxy plastics	Group of plastics composed of resins produced by reactions of epoxides or oxiranes with compounds such as amines, phenols, alcohols, carboxylic acids, acid anhydrides and unsaturated compounds.
Ethylene plastics	Group of plastics formed by polymerization of ethylene or by the copolymerization of ethylene with various unsaturated compounds.
Evenomation	Softening, discoloration, mottling, crazing, etc. Process of deterioration of a plastic's surface.
Exotherm	Indicates that heat is given from a reaction between a catalyst and a resin.
Expandable plastics	Plastics that can be transformed to cellular structures by chemical, thermal or mechanical means.
Extender	A material which, when added to an adhesive, reduces the amount of primary binder necessary.
Extraction	Transfer of materials from plastics to liquids with which they are in contact.

Extrusion	Process in which heated or unheated plastic compound is forced through an orifice, forming a continuous article.
Filament winding	Process in which continuous strands of roving or roving tape are wound, at a specified pitch and tension, onto the outside surface of a mandrel. Roving is saturated with liquid resin or is preimpregnated with partially cured resin. Application of heat may be required to promote polymerization.
Filler	Inert material that is added to a plastic to modify the finished product's strength, permanence and various other properties; an extender.
Fin	Portion of the 'flash' that adheres to the molded article.
Finishing	Removal of any defects from the surfaces of plastic products.
Fisheye	A clump or globular mass that does not blend completely into the surrounding plastic.
Flash	Excess material that builds up around the edges of a plastic article; usually trimmed off.
Foamed plastic	Cellular structured plastic.
Force plate	A plate used for holding plugs in place in compression molding.
Furane plastics	Group of plastics composed of resins in which the furane ring is an integral portion of the polymer chain; made from polymerization or polycondensation of furfural, furfural alcohol and other compounds containing furane rings; also formed by reaction of furane compounds with an equal weight or less of other compounds.
Fusion	As applied to vinyl dispersions, the heating of a dispersion, forming a homogeneous mixture.
Fusion temperature	Fluxing temperature; temperature at which fusion occurs in vinyl dispersions.
Gel	State at which resin exists before becoming a hard solid. Resin material has the consistency of a gelatin in this state; initial jelly-like solid phase that develops during the formation of a resin from a liquid.

Gel coat	Specially formulated polyester resin that is pigmented and contains fillers. Provides a smooth, pore-free surface for the plastic article.
Gel point	Stage at which liquid begins to show pseudoelastic properties.
Gelation	Formation of a gel.
Glass	Inorganic product of a fusion reaction. Material forms on cooling to a rigid state without undergoing crystallization. Glass is typically hard and brittle and will fracture conchoidally.
Glass transition	Transition region or state in which an amorphous polymer changed from (or to) a viscous or rubbery condition to (or from) a hard and relatively brittle one. Transition occurs over a narrow temperature region; similar to solidification of a glassy state. This transformation causes hardness, brittleness, thermal expansibility, specific heat and other properties to change dramatically.
Gum	Class of colloidal substances prepared from plants. Composed of complex carbohydrates and organic acids that swell in water. Also, a number of natural resins are gums.
Halocarbon plastics	Group of plastics composed of resins generated from the polymerization of monomers consisting of a carbon and a halogen or halogens.
Hardener	Compound or mixture that, when added to an adhesive, promotes curing.
Heat treat	Refers to annealing, hardening, tempering of metals.
Hot soils	Soils having a resistivity of less than 1,000 ohm-cm; generally very corrosive to base steel.
Hydrocarbon plastics	Plastics composed of resins consisting of carbon and hydrogen only.
Inhibitor	Material that retards chemical reaction or curing.
Isocyanate plastics	Group of plastics produced by the condensation of organic isocyanates with other plastics. Examples are the urethane plastics.
Isotactic	Type of polymeric molecular structure that contains sequences of regularly spaced asymetrical

	atoms that are arranged in similar configuration in the primary polymer chain. Materials having isotactic molecules are generally in a highly crystalline form.
Isotropic	Refers to materials whose properties are the same in all directions. Examples are metals and glass mats.
Laminate	Article fabricated by bonding together several layers of material or materials.
Laminated, cross	Laminate in which some of the layers of materials are oriented at right angles to the remaining layers. Orientation may be based on grain or strength direction considerations.
Laminated, parallel	Laminate in which all layers of materials are oriented in parallel with respect to grain or strongest direction in tension.
Lignin plastics	Group of plastics composed of resins formulated from the treatment of lignin with heat or by reaction with chemicals.
Line pipe	Pipeline used for transportation of gas, oil or water; utility distribution pipeline system ranging in sizes $\frac{1}{8}$-42 in. o.d. inclusive. Fabricated to American Petroleum Institute (API) and American Water Works Association (AWWA) specifications.
Lyophilic	Referring to vinyl dispersions, having affinity for the dispersing medium.
Lyophobic	Referring to vinyl dispersions, no affinity or attraction for dispersing medium.
Mechanical tubing	Welded or seamless tubing manufactured in a large range of sizes of varied chemical compositions (sizes range $\frac{3}{16}$-10 $\frac{3}{4}$ in. o.d. inclusive for carbon and alloy material); usually not fabricated to meet any specification other than application requirements; fabricated to meet exact outside diameter and decimal wall thickness.
Mechanically foamed plastic	Cellular plastic whose structure is fabricated by physically incorporated gases.
Melamine plastics	Group of plastics whose resins are formed by the condensation of melamine and aldehydes.

Metastable	Unstable state of plastic as evidenced by changes in physical properties not caused by the surroundings. Example is the temporary flexible condition some plastics display after molding.
Mold base	Assembly of all parts making up an injection mold, excluding cavity, cores and pins.
Molding, bag	Process of molding or laminating in which fluid pressure is applied, usually by means of water, steam, air or vacuum, to a flexible film or bag that transmits the pressure to the material being molded.
Molding, blow	Method of forming plastic articles by inflating masses of plastic material with compressed gas.
Molding, compression	Process of shaping plastic articles by placing material in a confining mold cavity and applying pressure and usually heat.
Molding, contact pressure	Method of molding or laminating whereby pressure used is slightly greater than is necessary to bind materials together during molding stage (pressures generally less than 10 psi).
Molding, high pressure	Molding or laminating with pressures in excess of 200 psi.
Molding, injection	Process of making plastic articles from powdered or granular plastics by fusing the material in a chamber under pressure with heat and forcing part of the mass into a cooler cavity where it solidifies; used primarily on thermoplastics.
Molding, low pressure	Molding or laminating at pressures below 200 psi.
Molding, transfer	Process of molding plastic articles from powdered, granular or preformed plastics by fusing the material in a chamber with heat and forcing the mass into a hot chamber for solidification. Used primarily on thermosetting plastics.
Monomer	Reactive material that is compatible with the basic resin. Tends to lower the viscosity of the resin.
Nonrigid plastic	Plastic whose apparent modulus of elasticity is not greater than 10,000 psi at room temperature in accordance with the Standard Method of Test for Stiffness in Flexure of Plastics (ASTM Designation: D747).

Novolak	Phenolic-aldehydic resin that remains permanently thermoplastic unless methylene groups are added.
Nylon plastics	Group of plastics comprised of resins that are primarily long-chain synthetic polymeric amides. These have recurring amide groups as an integral part of the principal polymer chain.
Organosol	Suspension of finely divided resin in a volatile organic slurry.
Phenolic plastics	Group of plastics whose resins are derived from the condensation of phenols (e.g., phenol and cresol, with aldehydes).
Piling pipe	Round-welded or seamless pipe for use as foundation piles where pipe cylinder acts as a permanent load-carrying member; usually filled with concrete. Used below the ground in foundation work in the construction industry for piers, docks, highways, bridges and all types of buildings. Fabricated to ASTM piling specifications (ASTM A-252).
Plastic	According to ASTM, a material containing an organic substance of large molecular weight that is sold in its finished state and, at some stage, is manufactured into finished goods and can be shaped to flow.
Plastic, semirigid	Plastic having apparent modulus of elasticity in the range of 10,000-100,000 psi at 23°C, as determined by the Standard Method of Test for Stiffness in Flexure Plastics (ASTM Designation: D747).
Plastic welding	Joining of finished plastic components by fusing materials either with or without the addition of plastic from another source.
Plasticate	Softening by heating or kneading.
Plasticity	Property of plastics that permits the material to undergo deformation permanently and continuously without rupture from a force that exceeds the yield value of the material.
Plasticize	Softening by adding a plasticizer.

Plasticizer	Material added to a plastic to increase its workability and flexibility. Plasticizers tend to lower the melt viscosity, the glass transition temperature and/or the elastic modulus.
Plastisol	Suspension of finely divided resin in a plasticizer.
Polyamide plastics	See nylon plastics.
Polyester plastics	Group of plastics composed of resins derived principally from polymeric esters that have recurring polyester groups in the main polymer chain. These polyester groups are crosslinked by carbon/carbon bonds.
Polyethylene	Plastic or resin made by the polymerization of ethylene as the sole monomer.
Polymer	Material produced by the reaction of relatively simple molecules with functional groups that allow their combination to proceed to high-molecular weights under suitable conditions; formed by polymerization or polycondensation.
Polymerization	Chemical reaction that takes place when a resin is activated.
Polypropylene	Plastic or resin derived from the polymerization of propylene as the principal monomer.
Polystyrene	Plastic derived from a resin produced by the polymerization of styrene.
Polyvinyl acetate	Resin derived from the polymerization of vinyl acetate.
Polyvinyl alcohol	Polymer derived from the hydrolysis of polyvinyl esters.
Polyvinyl chloride	Resin derived from the polymerization of vinyl chloride.
Polyvinyl chloride-acetate	Copolymer of vinyl chloride and vinyl acetate.
Pot life	Time period beginning once the resin is catalyzed and terminating when material is no longer workable; working life.
Preform	Coherent block of granular plastic molding compound or of fibrous mixture with or without resin. Prepared by sufficiently compressing material, forming a block that can be handled readily.

Prepolymer	An intermediate chemical structure between that of a monomer and the final resin.
Pressure tubing	Tubing used to convey fluids at elevated temperatures and/or pressures. Suitable for head applications, it is fabricated to exact o.d. and decimal wall thickness in sizes ranging from ½-6 in. o.d. inclusive and to ASTM specifications.
Primer	Coating that is applied to a surface before application of an adhesive, enamel, etc. The purpose is to improve bonding.
Promoted resin	Resin with an accelerator added but not catalyst.
Reinforced plastic	According to ASTM, those plastics having superior properties over those consisting of the base resin, due to the presence of high-strength fillers embedding in the composition. Reinforcing fillers are fibers, fabrics or mats made of fibers.
Resin	Highly reactive material which, in its initial stages, has fluid-like flow properties. When activation is initiated, material transforms into a solid state.
Roller	A serrated piece of aluminum used to work a plastic laminate. Purpose of device is to compact a laminate and to break up large air pockets to permit release of entrapped air.
Roving	Bundle of continuous, untwisted glass fibers. Glass fibers are wound onto a roll called a 'roving package.'
Saran plastics	Group of plastics whose resins are derived from the polymerization of vinylidene chloride or the copolymerization of vinylidene chloride and other unsaturated compounds.
Shelf life	Period of time over which a material will remain usable during storage under specified conditions such as temperature and humidity.
Silicone plastics	Group of plastics whose resins consist of a main polymer chain with alternating silicone and oxygen atoms and with carbon-containing side groups.
Softening range	Temperature range in which a plastic transforms from a rigid solid to a soft state.

Solvation	Process of swelling of a resin or plastic. Can be caused by interaction between a resin and a solvent or plasticizer.
Standard pipe	Pipe used for low-pressure applications such as transporting air, steam, gas, water, oil, etc. Employed in machinery, buildings, sprinkler and irrigation systems, and water wells but not in utility distribution systems; can transport fluids at elevated temperatures and pressures not subjected to external heat applications. Fabricated in standard diameters and wall thicknesses to ASTM specifications, its diameters range from $\frac{1}{8}$ to 42 in. o.d.
Stress-crack	Internal or external defect in a plastic caused by tensile stresses below its short-time mechanical strength.
Structural pipe	Welded or seamless pipe used for structural or load-bearing applications in aboveground installations. Fabricated in nominal wall thicknesses and sizes to ASTM specifications in round, square, rectangular and other cross-sectional shapes.
Structural shapes	Rolled flanged sections, sections welded from plates and specialty sections with one or more dimensions of their cross section greater than 3 in. They include beams, channels and tees, if depth dimensions exceed 3 in.
Styrene plastics	Group of plastics whose resins are derived from the polymerization of styrene or the copolymerization of styrene with various unsaturated compounds.
Styrene-rubber plastics	Plastics that are composed of a minimum of 50% styrene plastic and the remainder rubber compounds.
Syneresis	Contraction of a gel, observed by the separation of a liquid from the gel.
Thermoelasticity	Rubber-like elasticity that a rigid plastic displays; caused by elevated temperatures.
Thermoforming	Forming or molding with heat.
Thermoplastic	Reverse of thermoset. Materials that can be reprocessed by applying heat.

Thermoset	Those plastics that harden on application of heat and cannot be reliquefied, resin state being infusible.
Thixotropy	Describes those fluids whose apparent viscosity decreases with time to an asymptotic value under conditions of constant shear rate. Thixotropic fluids undergo a decrease in apparent viscosity by applying a shearing force such as stirring. If shear is removed, the material's apparent viscosity will increase back to or near its initial value at the onset of applying shear.
Tracer yarn	Strand of glass fiber colored differently from the remainder of the roving package. It allows a means of determining whether equipment used to chop and spray glass fibers is functioning properly and provides a check on quality and thickness control.
Urea plastics	Group of plastics whose resins are derived from the condensation of urea and aldehydes.
Urethane plastics	Group of plastics composed of resins derived from the condensation of organic isocyanates with compounds containing hydroxyl groups.
Vacuum forming	Fabrication process in which plastic sheets are transformed to desired shapes by inducing flow; accomplished by reducing the air pressure on one side of the sheet.
Vinyl acetate plastics	Group of plastics composed of resins derived from the polymerization of vinyl acetate with other saturated compounds.
Vinyl alcohol plastics	Group of plastics composed of resins derived from the hydrolysis of polyvinyl esters or copolymers of vinyl esters.
Vinyl chloride plastics	Group of plastics whose resins are derived from the polymerization of vinyl chloride and other unsaturated compounds.
Vinyl plastics	Group of plastics composed of resins derived from vinyl monomers, excluding those that are covered by other classifications (i.e., acrylics and styrene plastics). Examples include PVC, polyvinyl acetate, polyvinyl butyral, and various

	copolymers of vinyl monomers with unsaturated compounds.
Vinylidene plastics	Group known as saran plastics.
Weathering	Exposure of a plastic to outdoor conditions.
Yield value	Also called yield stress; force necessary to initiate flow in a plastic.

NOMENCLATURE

C_p heat capacity (kcal/kg-°C)
E modulus of elongation (kg/cm^2)
G weight loss at uniform corrosion (kg/m^2-hr)
t_m melting temperature (°C)
V corrosion rate (mm/yr)
λ thermal conductivity (kcal/m-°C-hr)
$\tilde{\mu}$ Poisson's ratio
ρ density (kg/dm^3 or g/cm^3)

REFERENCES

1. British Cast Iron Research Association. "Engineering Data on Cast Iron," Aevechurch, Birmingham, England (1968).
2. Gilbert, G. N. J. *Foundry Trades.* 667-672 (May 19, 1966); 713-723 (May 26, 1966).
3. Richardson, R. C. D. In: *Proc. Inst. Mech. Eng.* 182:410 (1967/1968).
4. Palmer, K. B. "Iron and Steel," 44:39-46 (February 1971).
5. ASTM. "Report on Properties of Cast Iron at Elevated Temperatures," ASTM Special Report N248 (1959).
6. "Code of Practice for the Repair and Reclamation of Gray Iron Castings by Welding and Allied Methods," *Proc. Inst. Brit. Foundrymen*, 43:A114-122 (1950).
7. National Association of Corrosion Engineers, "Corrosion Data Survey," Houston, TX (1979).
8. Diamant, R. M. E. "The Prevention of Corrosion, Business Book," London (1971).
9. Boyd, G. M., *Brittle Fracture of Steel Structures* (London: Butterworths, 1970).
10. Lessels, J., and J. Sinclair. *J. Iron and Steel Inst.* 205:249-256 (1967).
11. Sutherland, J. D., and I. Scott. *Welding and Metal Fabrication.* 26-30 (January 1967).
12. Geerlings, H. G., and J. C. Jongebreuer. "Corrosion in Oil Refinery Equipment," paper presented at the 1st International Congress on Metallic Corrosion, London, 1961.

13. Nelson, G. A. *Hydrocarbon Proc.* 45(5):201-204 (1966).
14. DePaul, R. A., et al. "Welding Research Supplement," *Welding J.* 44:409s-416s (October 1970).
15. "Mechanism of Temper Embrittlement," paper presented at the ASTM Symposium, Philadelphia, PA, October, 1970.
16. Moller, G. E. *Materials Protection* 62-67 (May 1966).
17. Truman, J. E. *Corrosion Technol.* 2:243 (1955).
18. Colberk, E. W., and R. P. Garner. *J. Iron and Steel Inst.* 139 (1939).
19. Keating, F. H. *Chromium Nickel Austenitic Steels* (London: Butterworths, 1956).
20. Asbough, W. G. *Material Protection* 18-23 (May 1965).
21. Farber, M., and D. M. Ehrenburg. *J. Electrochem. Soc.* 99:427 (1952).
22. Eigelstein, H. C., and E. N. Skinner. "The Effect of Composition on the Scaling of Iron-Chromium-Nickel Alloys Subjected to Cyclic Temperature Conditions," ASTM, STP No. 165 (1954).
23. McConnell, J. H., and R. R. Brady. *Chem. Eng.* 67:125-128 (July 11, 1960).
24. Rosenberg, J. J. "Nickel and Its Alloys," U.S. National Bureau of Standards Monograph (1968).
25. Spahn, H., and H. Grafen. *Technische Mitteilungen* 61(3):140-145 (1968).
26. Corrosion Data Survey, NACE, Houston, TX (1979).
27. Greenert, J. W. *Corrosion* 18(3):95t-102t (1962).
28. "Copper and Copper Alloy Data," Conseil International pour le Developpment du Cuivre, Geneva (1979).
29. Baker, *Proc. Chem. Eng. Group* 19:41 (1937).
30. Carey, R. J. T. *Aust. Eng.* 54-69 (June 7, 1954).
31. Moore, D. C. *Metals and Materials* 251-257 (June 1970).
32. Newson, E. R. *Chem. Proc.* 33-39 (December 1970).
33. Roll, K. H. *Chem. Eng.* 60:264-280 (February 1953).
34. "British Standard Code of Practice CP3003: Lining of Vessels and Equipment for Chemical Processes, Part 9: Titanium."
35. Gleekman, L. W. "Trends in Materials Application–Non-Ferrous Metals," Chem. Eng. Casebook, 111-118 (October 12, 1970).
36. Taylor, D. F. *Ind. Eng. Chem.* 32:439 (1950).
37. Bishop, C. R., and H. Stern. *Corrosion* 379t-385t (August 1961).
38. "Bishop Standard Code of Practice CP3003: Lining of Vessels and Equipment for Chemical Process, Part 8: Precious Metals."
39. "BS4641: Electroplated Coatings of Chromium for Engineering Purposes."
40. "BS4758: Electroplated Coatings of Nickel for Engineering Purposes."
41. "BS729: Hot Dip Galvanized Coatings on Iron and Steel Articles."
42. "ASTM A123: Zinc (Hot Galvanized) Coatings on Products Fabricated from Rolled, Pressed and Forged Steel Shapes, Plates, Bars and Strips."
43. "British Standard Code of Practice CP2008: Protection of Iron and Steel Structures from Corrosion, 69."
44. "BS2569: Sprayed Metal Coatings. Part I: Protection of Iron and Steel by Aluminum and Zinc Against Atmospheric Corrosion."
45. "BS729. Part 2: Sheradised Coatings."
46. "New Chromizing and Chromium-Aluminizing Processes," *Mach. Prod. Eng.* (May 3, 1967).

47. Hilliard, A. *Brit. Chem. Eng.* 4(3):138-143 (1959).
48. "High Strength Glass Ceramics," *Eng. Mat. Design* 14 (January 1960).
49. Brain, R. C. *Chem. Proc. Eng.* 101-102 (February 1970).
50. Carnet, I. *Mat. Protection* 56-58 (March 1967).
51. "British Standard Code of Practice: 3003: Lining of Vessels and Equipment for Chemical Processes, Part 10: Brick and Tile."
52. "Acid-Proof Vessel Construction with Membrane and Brick Linings," NACE Committee Report, *Corrosion* 195t-204t (March 1957).
53. *Modern Plastics Encyclopedia* published annually (New York: McGraw-Hill Book Co.).
54. Cheremisinoff, N. P., and P. N. Cheremisinoff. *Fiberglass-Reinforced Plastics Deskbook* (Ann Arbor, MI: Ann Arbor Science Publishers, Inc., 1978).
55. Vincent, P. I. *Eng. Mat. Design* 816-821 (December 1961).
56. Mottram, S., and D. A. Lever. *The Industrial Chemist* (February, March, April, May, 1957).
57. Czehorsky, G. *Kunstoff* 60: 354-358 (June 1970).
58. "British Standard Code of Practice CP3003: Lining of Vessels and Equipment for Chemical Processes, Part 4: Plasticized PVC Sheet."
59. Allan, A. J. G., and F. M. Chapman. *Mat. Design Eng.* 106-108 (October 1958).
60. "ASTM D78-: Methacrylate Molding and Extrusion Compounds."
61. *Mat. Protection* 79-82 (August 1966).
62. Powell, P. C. *Design Eng.* 72-75 (October 1971).
63. Mallinson, J. H. *Chemical Plant Design with Reinforced Plastics* (New York: McGraw-Hill Book Co., 1969).
64. Fenner, O. H. *Mat. Protection* 23-25 (May 1968).
65. Munger, C. G. *Mat. Protection* 19-24 (January 1969).
66. Saxman, T. E. *Mat. Protection* 43-45 (October 1965).
67. Butt, L. T. *Rubber and Plastics Age* 42(5):528-530 (1961).
68. Evans, L. S. *Rubber and Plastics Age* (November 1963).
69. "British Standard Code of Practice CP3003: Lining of Vessels and Equipment for Chemical Processes, Part 1: Rubber."
70. "British Standard Code of Practice CP2008: Protection on Iron and Steel Surfaces from Corrosion."
71. *Steel Structures Painting Manual* (Pittsburgh: Steel Structures Painting Council, 1964).
72. "Curing of Interior Tank Linings," NACE Technical Committee Report, *Mat. Protection* 87-89 (January 1964).
73. "British Standard Code of Practice CP3003: Lining of Vessels and Equipment for Chemical Processes, Part 6: Phenolic Resins."