2.
DESIGN AND CORROSION

2.1 INTRODUCTION

Corrosion occurs in various forms and is promoted by a variety of causes, all related to process operating conditions. It is a continuous problem that can lead to contaminated process streams which leads to poor product quality and unscheduled equipment shutdowns, which leads to reduced production, and high maintenance and equipment replacement costs. Minimizing corrosion is a key consideration for the designer and can be accomplished in two ways: (1) proper material selection for apparatus, and (2) preventive maintenance practices. Both these approaches must be examined by the designer. This chapter reviews principles of corrosion causes and control. It is important to recognize conditions that promote rapid material degradation to compensate for corrosion in designing.

2.2 TYPES OF CORROSION

Corrosion is characterized by the controlling chemi-physical reaction that promotes each type. Each of the major types is described below.

Uniform corrosion is the deterioration of a metal surface that occurs uniformly across the material. It occurs primarily when the surface is in contact with an aqueous environment, which results in a chemical reaction between the metal and the service environment. Since this form of corrosion results in a relatively uniform degradation of apparatus material, it can be accounted for most readily at the time the equipment is designed, either by proper material selection, special coatings or linings, or increased wall thicknesses.

Galvanic corrosion results when two dissimilar metals are in contact, thus forming a path for the transfer of electrons. The contact may be in the form of a direct connection (e.g., a steel union joining two lengths of copper

piping), or the dissimilar metals may be immersed in an electrically conducting medium (e.g., an electrolytic solution). One metal acts as an anode and, consequently, suffers more corrosion than the other metal, which acts as the cathode. The driving force for this type of corrosion is the electrochemical potential existing between two metals. This potential difference represents an approximate indication of the rate at which corrosion will take place. That is, corrosion rates will be faster in service environments where electrochemical potential differences between dissimilar metals are high.

Thermogalvanic corrosion is promoted by an electrical potential caused by temperature gradients and can occur on the same material. The region of the metal higher in temperature acts as an anode and thus undergoes a high rate of corrosion. The cooler region of the metal serves as the cathode. Hence, large temperature gradients on process equipment surfaces exposed to service environments will undergo rapid deterioration.

Erosion corrosion occurs in an environment where there is flow of the corrosive medium over the apparatus surface. This type of corrosion is greatly accelerated when the flowing medium contains solid particles. The corrosion rate increases with velocity. Erosion corrosion generally manifests as a localized problem due to maldistributions of flow in the apparatus. Corroded regions are often clean, due to the abrasive action of moving particulates, and occur in patterns or waves in the direction of flow.

Concentration cell corrosion occurs in an environment in which an electrochemical cell is affected by a difference in concentrations in the aqueous medium. The most common form is crevice corrosion. If an oxygen concentration gradient exists (usually at gaskets and lap joints), crevice corrosion often occurs. Larger concentration gradients cause increased corrosion (due to the larger electrical potentials present).

Cavitation corrosion occurs when a surface is exposed to pressure changes and high-velocity flows. Under pressure conditions, bubbles form on the surface. Implosion of the bubbles causes local pressure changes sufficiently large to flake off microscopic portions of metal from the surface. The resulting surface roughness acts to promote further bubble formation, thus increasing the rate of corrosion.

Fretting corrosion occurs where there is friction between two metal surfaces. Generally, this friction is caused by vibrations. The debris formed by fretting corrosion accelerates the damage. Initial damage is done by contact welding. Vibrations cause contact welds to break, with subsequent surface deterioration. Debris formed acts to accelerate this form of corrosion by serving as an abrasive. Fretting corrosion is especially prevalent in areas where motion between surfaces is not foreseen. If allowances for vibration are not made during design, fretting corrosion may be a strong candidate.

Pitting corrosion is a form of localized corrosion in which large pits are formed in the surface of a metal usually in contact with an aqueous solution.

The pits can penetrate the metal completely. The overall appearance of the surface involved does not change considerably; hence, the actual damage is not readily apparent. Once a pit forms, it acts as a local anode. Conditions such as debris and concentration gradients in the pit further accelerate degradation. There are several possible mechanisms for the onset of pitting corrosion. Slight damage or imperfections in the metal surface, such as a scratch or local molecular dislocation, may provide the environment necessary for the beginning of a pit.

Exfoliation corrosion is especially prevalent in aluminum alloys. The grain structure of the metal determines whether exfoliation corrosion will occur. In this form of corrosion, degradation propagates below the surface of the metal. Corrosion products in layers below the metal surface cause flaking of the metal.

Selective leaching occurs when a particular constituent of an alloy is removed. Selective leaching occurs in aqueous environments, particularly acidic solutions. Graphitization and dezincification are two common forms of selective leaching. Dezincification is the selective removal of zinc from alloys containing zinc, particularly brass. The mechanism of dezincification of brass involves dissolving the brass with subsequent plating back of copper while zinc remains in solution. Graphitization is the selective leaching of iron or steel from gray cast irons.

Intergranular corrosion occurs selectively along the grain boundaries of a metal. This is an electrochemical corrosion in which potential differences between grain boundaries and the grain become the driving force. Even with relatively pure metals of only one phase, sufficient impurities can exist along grain boundaries to allow for intergranular corrosion. Intergranular corrosion is generally not visible until the metal is in advanced stages of deterioration. These advanced stages appear as rough surfaces with loose debris (dislodged grains). Welding can cause local crystal graphic changes, which favor intergranular corrosion. It is especially prevalent near welds.

Stress corrosion cracking is an especially dangerous form of corrosion. It occurs when a metal under a constant stress (external, residual or internal) is exposed to a particular corrosive environment. The effects of a particular corrosive environment vary for different metals. For example, Inconel-600 exhibits stress corrosion cracking in high-purity water with only a few parts per million of contaminants at about 300°C. The stress necessary for this type of corrosion to occur is generally of the residual or internal type. Most external stresses are not sufficient to induce stress corrosion cracking. Extensive cold working or the presence of a rivet are common stress providers. Corrosion products also can build up to provide stress sufficient to cause stress corrosion cracking. The damage done by stress corrosion cracking is not obvious until the metal fails. This aspect of stress corrosion cracking makes it especially dangerous.

Corrosion fatigue is caused by the joint action of cyclically applied stresses and a corrosive medium (generally aqueous). Metals will fail due to cyclic application of stress (fatigue). The presence of an aqueous corrosive environment causes such failure more rapidly. The frequency of the applied stress affects the rate of degradation in corrosion fatigue. Ordinary fatigue is generally not frequency dependent. Low-frequency applied stresses cause more rapid corrosion rates. Intuitively, low frequencies cause extended contact time between cracks and the corrosive medium. Generally, the cracks formed are transgranular.

Hydrogen blistering is caused by bubbling of a metal surface due to absorbed hydrogen. Monatomic hydrogen can diffuse through metals, whereas diatomic hydrogen cannot. Ionic hydrogen generated by chemical processes (such as electrolysis or corrosion) can form monatomic hydrogen at a metal surface. This hydrogen can diffuse through the metal and combine on the far side of the metal forming diatomic hydrogen. The diffusion hydrogen also can combine in voids in the metal. Pressure within the void increases until the void actually grows (visibly apparent as a blister) and ultimately ruptures, leading to mechanical failure.

Hydrogen embrittlement is due to the reaction of diffused hydrogen with a metal. Different metals undergo specific reactions, but the result is the same. Reaction with hydrogen produces a metal that is lower in strength and more brittle.

Decarburization results from hydrogen absorption from gas streams at elevated temperatures. In addition to hydrogen blistering, hydrogen can remove carbon from alloys. The particular mechanism depends to a large extent on the properties of other gases present. Removal of carbon causes the metal to lose strength and fail.

Grooving is a type of corrosion particular to environmental conditions where metals are exposed to acid-condensed phases. For example, high concentrations of carbonates in the feed to a boiler can produce steam in the condenser to form acidic condensates. This type of corrosion manifests as grooves along the surface following the general flow of the condensate.

Biological corrosion involves all corrosion mechanisms in which some living organism is involved. Any organism, from bacteria and fungi to mussels, which can attach themselves to a metal surface, can cause corrosion. Biological processes may cause corrosion by producing corrosive agents, such as acids. Concentration gradients also can be caused by localized colonies of organisms. Some organisms remove protective films from metals, either directly or indirectly, leaving the actual metal surface vulnerable to corrosion. By selective removal of products of corrosion, biological organisms also can cause accelerated corrosion reactions. There are also some bacteria that directly digest certain metals (e.g., iron, copper or aluminum). Microorganisms also may promote galvanic corrosion by removing hydrogen from

the surface of a metal causing a potential difference to be created between different parts of the metal.

Stray current corrosion is an electrolytic degradation of a metal caused by unintentional electrical currents. Bad grounds are the most prevalent causes. The corrosion is actually a typical electrolysis reaction.

Gaseous corrosion is a general form of corrosion whereby a metal is exposed to a gas (usually at elevated temperatures). Direct oxidation of a metal in air is the most common cause. Cast iron growth is a specific form of gaseous corrosion in which corrosion products accumulate onto the metal surface (and particularly at grain boundaries) to the extent that they cause visible thickening of the metal. The entire metal thickness may succumb to this before loss of strength causes failure.

Tuberculation occurs in aqueous solutions. Mounds form over metal surfaces providing for concentration differences, favorable environments for biological growth, and an increase in acidity leading to hydrogen formation.

Deposit attack occurs when there is nonuniform deposition of a film on a metal surface. The most common form appears as unequal scale deposits in an aqueous environment. Unequal film provides for concentration cells, which degrade the metal by galvanic means.

Impingement is corrosion caused by aerated water streams constricting metal surfaces. It is similar to erosion corrosion in which air bubbles take the place of particles. The pits formed by impingement attack have a characteristic tear drop shape.

Liquid metal corrosion occurs when a metal is in contact with a liquid metal. The main type of corrosion with highly pure liquid metals is simple solution. The solubility of the solid metal in the liquid metal controls the rate of damage. If a temperature gradient exists, a much more damaging form of corrosion takes place. Metal dissolves from the higher temperature zone and crystallizes out in the colder zone. Transfer of solids to liquid metal is greatly accelerated by thermal gradients. If two dissimilar metals are in contact with the same liquid metal, the more soluble metal exhibits serious corrosion. The more soluble metal dissolves along with alloys from the less soluble metal. Metal in solutions may move by gross movement of the liquid metal or by diffusion. Depending on the system, small amounts of impurities may cause corrosive chemical reactions.

High-temperature corrosion is induced by accelerated reaction rates inherent in any temperature reaction. One phenomenon that occurs frequently in heavy oil-firing boilers is layers of different types of corrosion on one metal surface.

Causes of corrosion are the subject of extensive investigation by industry. Almost any type of corrosion can manifest itself under widely differing operating conditions. Also, different types of corrosion can occur simultaneously. It is not uncommon to see crack growth from stress corrosion to

be accelerated by crevice corrosion, for example. For more detailed descriptions of the mechanisms of corrosion, the reader should consult the literature [1-10].

2.3 MATERIALS EVALUATION AND SELECTION

Materials evaluation and selection are fundamental considerations in engineering design. If done properly, and in a systematic manner, considerable time and cost can be saved in design work, and design errors can be avoided.

The design of any apparatus must be unified and result in a safe functional system. Materials used for each apparatus should form a well coordinated and integrated entity, which should not only meet the requirements of the apparatus' functional utility, but also those of safety and product purity.

Materials evaluation should be based only on actual data obtained at conditions as close as possible to intended operating environments. Prediction of a material's performance is most accurate when standard corrosion testing is done in the actual service environment. Often it is extremely difficult in laboratory testing to expose a material to all of the impurities that the apparatus actually will contact. In addition, not all operating characteristics are readily simulated in laboratory testing. Nevertheless, there are standard laboratory practices that enable engineering estimates of the corrosion resistance of materials to be evaluated.

Environmental composition is one of the most critical factors to consider. It is necessary to simulate as closely as possible all constituents of the service environment in their proper concentrations. Sufficient amounts of corrosive media, as well as contact time, must be provided for test samples to obtain information representative of material properties degradation. If an insufficient volume of corrosive media is exposed to the construction material, corrosion will subside prematurely.

The American Society for Testing Materials (ASTM) recommends 250 ml of solution for every square inch of area of test metal. Exposure time is also critical. Often it is desirable to extrapolate results from short time tests to long service periods. Typically, corrosion is more intense in its early stages (before protective coatings of corrosion products build up). Results obtained from short-term tests tend to overestimate corrosion rates which often results in an overly conservative design.

Immersion into the corrosive medium is important. Corrosion can proceed at different rates, depending on whether the metal is completely immersed in the corrosive medium, partially immersed or alternately immersed and withdrawn. Immersion should be reproduced as closely as possible since there are no general guidelines on how this affects corrosion rates.

Oxygen concentration is an especially important parameter to metals exposed to aqueous environments. Temperature and temperature gradients should also be reproduced as closely as possible. Concentration gradients in solutions also should be reproduced closely. Careful attention should be given to any movement of the corrosive medium. Mixing conditions should be reproduced as closely as possible.

The condition of the test metal is important. Clean metal samples with uniform finishes are preferred. The accelerating effects of surface defects lead to deceptive results in samples. The ratio of the area of a defect to the total surface area of the metal is much higher in a sample than in any metal in service. This is an indication of the inaccuracy of tests made on metals with improper finishes. The sample metal should have the same type of heat treatment as the metal to be used in service. Different heat treatments have different effects on corrosion. Heat treatment may improve or reduce the corrosion resistance of a metal in an unpredictable manner. For the purpose of selectivity, a metal stress corrosion test may be performed. General trends of the performance of a material can be obtained from such tests; however, it is difficult to reproduce the stress that actually will occur during service.

For galvanic corrosion tests it is important to maintain the same ratio of anode to cathode in the test sample as in the service environment.

Evaluation of the extent of corrosion is no trivial matter. The first step in evaluating degradation is the cleaning of the metal. Any cleaning process involves removal of some of the substrate. In cases in which corrosion products are strongly bound to the metal surface, removal causes inaccurate assessment of degradation due to surface loss from the cleaning process. Unfortunately, corrosion assessments involving weight gain measurements are of little value. It is rare for all of the corrosion products to adhere to a metal. Corrosion products that flake off cause large errors in weight gain assessment schemes.

The most common method of assessing corrosion extent involves determining the weight loss after careful cleaning. Weight loss is generally considered a linear loss by conversion. Sometimes direct measurement of the sample thickness is made. Typical destructive testing methods are used to evaluate loss of mechanical strength. Aside from inherent loss of strength due to loss of cross section, changes brought about by corrosion may cause loss of mechanical strength. Standard tests for tensile strength, fatigue and impact resistance should be run on test materials.

There are several schemes for nondestructive evaluation. Changes in electrical resistance can be used to follow corrosion. Radiographic techniques involving X-rays and gamma rays have been applied. Transmitted radiation as well as back scattered radiation have been used.

Radiation transmission methods, in which thickness is determined by (measured as) the shadow cast from a radioactive source, are limited to

pieces of equipment small enough to be illuminated by small radioactive sources. There are several schemes for highlighting cracks. If the metal is appropriate, magnetic particles can be used to accentuate cracks. Magnetic particles will congregate along cracks too small to be seen normally. An alternate method involves a dye. A dye can be used that will soak into cracks preferentially.

Because of the multitude of engineering materials and the profusion of material-oriented literature it is not possible to describe specific engineering practices in detail in a single chapter. However, we can outline general criteria for parallel evaluation of various materials that can assist in proper selection. The following is a list of general guidelines that can assist in material selection:

1. Select materials based on their functional suitability to the service environment. Materials selected must be capable of maintaining their function safely and for the expected life of the equipment, and at reasonable cost.

2. When designing apparatus with several materials, consider all materials as an integrated entity. More highly resistant materials should be selected for the critical components and for cases in which relatively high fabrication costs are anticipated. Often, a compromise must be made between mechanically advantageous properties and corrosion resistance.

3. Thorough assessment of the service environment and a review of options for corrosion control must be made. In severe, humid environments it is sometimes more economical to use a relatively cheap structural material and apply additional protection, rather than use costly corrosion-resistant ones. In relatively dry environments many materials can be used without special protection, even when pollutants are present.

4. The use of fully corrosion-resistant materials is not always the best choice. One must optimize the relation between capital investment and cost of subsequent maintenance over the entire estimated life of the equipment.

5. Consideration should be given to special treatments that can improve corrosion resistance (e.g., special welding methods, blast peening, stress relieving, metallizing, sealing of welds). Also, consideration should be given to fabrication methods that minimize corrosion.

6. Alloys or tempers chosen should be free of susceptibility to corrosion and should meet strength and fabrication requirements. Often a weaker alloy must be selected than one that cannot be reliably heat treated and whose resistance to a particular corrosion is low.

7. If, after fabrication, heat treatment is not possible, materials and fabrication methods must have optimum corrosion resistance in their as-fabricated form. Materials that are susceptible to stress corrosion cracking should not be employed in environments conducive to failure. Stress relieving alone does not always provide a reliable solution.

8. Materials with short life expectancies should not be combined with those of long life in nonreparable assemblies.

9. For apparatuses for which heat transfer is important, materials prone to scaling or fouling should not be used.

10. For service environments in which erosion is anticipated, the wall thickness of the apparatus should be increased. This thickness allowance should secure that various types of corrosion or erosion do not reduce the apparatus wall thickness below that required for mechanical stability of the operation. Where thickness allowance cannot be provided, a proportionally more resistant material should be selected.

11. Nonmetallic materials should have the following desirable characteristics: low moisture absorption, resistance to microorganisms, stability through temperature range, resistance to flame and arc, freedom from outgassing, resistance to weathering, and compatibility with other materials.

12. Fragile or brittle materials whose design does not provide any special protection should not be employed under corrosion-prone conditions.

Thorough knowledge of both engineering requirements and corrosion control technology is required in the proper design of equipment. Only after a systematic comparison of the various properties, characteristics and fabrication methods of different materials can a logical selection be made for a particular design. Tables 2.1 through 2.5 can assist in this analysis. Table 2.1 lists general physical and material characteristics, as well as characteristics of strength, that should be considered when comparing different metals and/or nonmetals for a design. Table 2.2 is a listing of fabrication parameters that should be examined in the materials comparison process. In addition to the characteristics listed in Tables 2.1 and 2.2, an examination of design limitations and economic factors must be made before optimum material selection is accomplished. Design limitations or restrictions for materials might include:

- size and thickness
- velocity
- temperature
- composition of constituents
- bimetallic attachment
- geometric form
- static and cyclic loading
- surface configuration and texture
- special protection methods and techniques
- maintainability
- compatibility with adjacent materials

Economic factors that should be examined may be divided into three categories: (1) availability, (2) cost of different forms, and (3) size limitations and tolerances [3]. More specifically, these include:

Table 2.1. Parameters to Analyze in Materials Selection

Metals	Nonmetals
General Physical Characteristics	
1) Chemical composition (%)	1) Anisotropy characteristics (main and cross-direction)
2) Contamination of contents by corrosion products	2) Area factor ($in.^2$/lb/mil)
3) Corrosion characteristics in:	3) Burn rate (in./min)
Atmosphere	4) Bursting strength (Mullen points)
Water	5) Change in linear dimensions @ 100°C for 30 min. (%)
Soil	6) Clarity
Chemicals	7) Color
Gases	8) Creep characteristics @ temperature range–creep apparent modulus (10° $lb_f/in.^2$).
Molten metals	9) Crystal structure
4) Creep characteristics @ temperature range	10) Crystalline melting point
5) Crystal structure	11) Damping coefficient
6) Damping coefficient	12) Decay characteristics in:
7) Density (g/cm^3)	Atmosphere
8) Effect of cold working	Alcohols
9) Effect of high temperature on corrosion resistance	Chemicals
10) Effect on strength after exposure to:	Gases
Hydrogen	High relative humidity
High temperatures	Hydraulic oils
11) Electrical conductivity (mho/cm)	Hydrocarbons
12) Electrical resistivity (Ω/cm)	Solvents
13) Fire resistance	Sunlight
14) Hardenability	Water
15) Maximum temperature not affecting strength (°C)	13) Deflection temperature (°C)
16) Melting point (°C)	264 ($lb_f/in.^2$) fiber stress
17) Corrosion factor (rapidity of corrosion)	66 ($lb_f/in.^2$) fiber stress
18) Susceptibility to corrosion:	14) Density (g/cm^3)
General	15) Dielectric constant
Hydrogen damage	16) Dielectric strength: short time/step-by-step
Pitting	17) Dissipation factor (1 MΩ)
Galvanic	18) Effect on decay from: high temperature/low temperature/ exposure to heat
Corrosion fatigue	19) Electrical loss factor (1 MΩ)
Fretting	20) Electrical resistivity
Stress corrosion cracking	arc/sec
Corrosion/erosion	insulation (96 hρ 90% RH and 35°C)MΩ
Cavitation damage	21) Combustion properties/fire resistance
Intergranular	22) Flammability
Selective attack	23) Fillers
High temperature	24) Gas permeability (cm^3/100 $in.^2$/mil thick/24 hr/atm at 25°C): CO_2, H_2, N_2, O_2
19) Thermal coefficient of expansion ($°C^{-1}$)	25) Heat distortion temperature at 264 $lb_f/in.^2$) (°F)
20) Thermal conductivity (W/m °C)	26) Thermal coefficient of expansion ($in.^{-1}$ °F)
21) Wearing quality:	
Inherent	
Via heat treatment	
Via plating	

Table 2.1, continued

Metals	Nonmetals
General Physical Characteristics	
	27) Thermal conductivity (Btu/ft^2 h °F in.$^{-1}$) 28) Light transmission, total white (%) 29) Maximum service temperature (°C) 30) Melt index (dg/min.) 31) Minimum and maximum temperatures not affecting strength (°C) 32) Softening temperature (°C) 33) Stiffness–Young's modulus 34) Susceptibility to various forms of deterioration: General Cavitation/erosion Erosion Fatigue Fouling Galvanic (metal-filled plastics) Impingement Stress cracking and crazing 35) Thermal conductivity (W/m°C) 36) Wearing quality: Inherent Via treatment
Strength and Mechanical Characteristics	
1) Bearing ultimate (N/mm^2) 2) Complete stress-strain curve for tension and compression 3) Compression modulus of elasticity (kg/mm^2) 4) Fatigue properties 5) Hardness (Vickers) 6) Impact properties (Charpy kg/cm^2 @ 20°C): Notch sensitivity Effect of low temperature Maximum transition temperature (°C) 7) Poisson's ratio 8) Response to stress-relieving methods 9) Shear modulus of elasticity (kg/mm^2) 10) Shear ultimate (Pa) 11) Tension modulus of elasticity (Pa) 12) Tension-notch sensitivity 13) Tension yield	1) Abrasion resistance 2) Average yield (lb$_f$/in.^{2}) 3) Bonding strength (lb/thickness) 4) Brittleness 5) Bursting pressure (lb$_f$/in.^{2}) 6) Compressive strength: Flatwise (lb$_f$/in.^{2}) Axial (lb$_f$/in.^{2}) at 10% deflection (lb$_f$/in.^{2}) 7) Deformation under load 8) Elongation (%) 9) Elongation at break (%)-75°F (24°C) 10) Fatigue properties 11) Flexibility and flex life 12) Flexural strength (N/mm^2) 13) Hardness (Rockwell) 14) Impact strength, Izod (ft lb^{-1} in.$^{-1}$ notch) 15) Inherent rigidity 16) Modulus of elasticity (lb$_f$/in.^{2} or kg/mm^2) In compression In flexure In tension In shear

Table 2.1, continued

Metals	Nonmetals
Strength and Mechanical Characteristics	
	17) Resistance to fatigue 18) Safe operating temperature (°C) 19) Shear ultimate (Pa) 20) Tear strength: Propagating (g/mil) Initial (lb/in.) 21) Tensile strength ($lb_f/in.^2$ or kg/mm^2) 22) Vacuum collapse temperature

Table 2.2. Fabrication Parameters to Analyze in Materials Selection

General Subject	Parameter
Metals	
Brazing and soldering	Compatibility Corrosion effect Flux and rod
Formability at elevated and room temperature	Aging characteristics Annealing procedure Corrosion effect of forming Heat treating characteristics Quenching procedures Sensitivity to variation Tempering procedure Effect of heat on prefabrication treatment
Formability in annealed and tempered states	Apparatus stress X local stream curve Characteristics in: Bending Dimpling Drawing Joggling Shrinking Stretching Corrosion effect of forming Elongation X gauge length Standard hydropress specimen test True stress-strain curve Uniformity of characteristics
Machinability	Best cutting speed Corrosion effect of: Drilling Milling

Table 2.2, continued

General Subject	Parameter
	Metals
	Routing Sawing Shearing Turning Fire hazard Lubricant or coolant Material and shape of cutting tool Quality suitability for: Drilling Routing Milling Sawing Shearing Turning
Protective coating	Anodizing Cladding Ecology Galvanizing Hard surfacing Metallizing Need of application for: Storage Processing Service Paint adhesion and compatibility Plating Prefabrication treatment Sensitivity to contaminants Suitability Type surface preparation
Quality of finish	Appearance Cleanliness Grade Honing Polishing Surface effect
Weldability	Arc welding Atomic hydrogen welding Corrosion effect of welding Cracking tendency Prefabrication treatment effects Electric flash welding Flux Friction welding Heat zone effect Heli-arc welding Pressure welding Spot welding

Table 2.2, continued

General Subject	Parameter
Metals	
	Torch welding
	Welding rod
Torch cutting	Cutting speed
Nonmetals	
Molding and injection	Compression ratio
	Compression molding pressure ($lb_f/in.^2$)
	Compression molding temperature (°C)
	Injection molding pressure ($lb_f/in.^2$)
	Injection molding temperature (°C)
	Molding qualities
	Mold (linear) shrinkage (in./in.)
	Specific volume (lb^3)
Lamination	Lamination pressure ($lb_f/in.^2$)
	Lamination temperature (°C)
Formation at elevated temperatures	
Machinability	Adverse effects of:
	Drilling
	Milling
	Sawing
	Shearing
	Turning
	Best cutting speed
	Fire hazard
	Machining qualities
	Material and shape of cutting tool
Protective coating	Cladding
	Painting
	Plating
	Sensitivity to contaminants
	Suitability
	Type surface preparation
Quality of finish	Appearance
	Cleanliness
	Grade
	Polishing
	Surface and effect
Joining	Adhesive joining
	Bonding
	Cracking tendency
	Heat zone effect
	Welding

Table 2.3. General Properties of the Corrosion Resistance of Metals to Various Chemicals [11]

R = Recommended
M = Moderate Service
L = Limited Service
U = Unsatisfactory
Blank = No information

	Carbon Steel	Cast Iron and Ductile Iron	304 Stainless Steel	316 Stainless Steel	347 Stainless Steel	Nickel-Resist Iron	Carpenter 20; Durinet 20	Worthite	Duriron-Durichlor	Monel	Inconel	Hastelloy B	Hastelloy C	Hastelloy D	Chlorimet 3	Aluminum and Alloys	Copper and Cu Alloys	Brass	Lead	Nickel
Aluminum Chloride	U	U	U	U	U	L	R	U	R	U	L	R	M	R	R	U	L	L	U	L
Aluminum Hydroxide			R	R			R	R	M	M					R	R	R	R		R
Aluminum Sulfate	U		L	L	R	L	R	R	R	L	L	R	R	R	R	R	L	L	R	L
Alums, Dilute	U	U	R	L	L	L	R	R	R	R	R	R	R	R	R	R	L	L	R	R
Amines (various)	R	R	R	R	R	R	R	R	R		R	R	R	R	R	L	L	L		R
Ammonia Gas	R		R	R	R	R	R		R			R	R	R	R	U	U			R
Ammonium Carbonate	M	M	M	M	R		R		R	M	M	M	M	M	R	L	L	L		R
Ammonium Chloride	U	U	U	L	L	R	R	R	R	M	M	L	M	M	R	U	U	U	L	M
Ammonium Hydroxide	R	R	R	R	R	R	R	R	M	U	R	M	M	M	R	L	U	U	M	U
Ammonium Nitrate	U		R	R	R	L	R	R	R	R	L	U	R	U	R	U	U	U		
Ammonium Sulfate	R		L	L	M	R	R	R	R	M	R	R	R	R	R	L	L	L	L	M
Benzene	M	M	R	R	R	R	R	R	R	M	R	M	M	M	R	R	R	R	M	M
Calcium Carbonate	R		R	R		R	R	R	R	R	R	R	R	R	R	U	R	R	R	R
Calcium Chlorate			L	R	U		M	L	M	M	M		M	M	M		L	L		R
Calcium Chloride	R	R	L	L	L	L	M	R	R	M	M	M	R	M	R	L	M	M	U	R
Calcium Hydroxide	R		R	R	R	R	R	R	M	R	R	R	R	R	R	L	M	L	L	R
Calcium Hypochlorite	L		U	L	L	L	L	L	R	U	U	U	L	U	U	U	U	U	U	U
Calcium Sulfate	L		R	R			R	R	R	M		M	M	M	R	L	R	R		
Carbon Dioxide (dry)	R	R	R	R	R	R	R	R	R	R	R	R	R	R	R	R	R	R	R	R
Carbon Dioxide (wet)	L	L	R	R	R	L	R	R	R	L	R	R	R	R	R	L	L	L	L	R

Table 2.3, continued

R = Recommended
M = Moderate Service
L = Limited Service
U = Unsatisfactory
Blank = No information

	Carbon Steel	Cast Iron and Ductile Iron	304 Stainless Steel	316 Stainless Steel	347 Stainless Steel	Nickel-Resist Iron	Carpenter 20; Durinet 20	Worthite	Duriron-Durichlor	Monel	Inconel	Hastelloy B	Hastelloy C	Hastelloy D	Chlorimet 3	Aluminum and Alloys	Copper and Cu Alloys	Brass	Lead	Nickel
Chlorine (wet)	U	U	U	U	U	U	U	U	L	U	U	U	R	U	M	U	U	U	L	L
Chromic Acid Solution	L	M	U	L	U	U	M	R	R	U	L	U	M	U	M	M	U	U	M	U
Copper Chloride	U	U	U	U	U		U	R	U	U	U	R	R	R	L	U	U	U	U	U
Copper Sulfate	U	U	R	R	R	L	R	R	R	L	L	R	R	R	R	U	U	U	L	L
Fatty Acids	U	U	R	R	R	L	R	R	R	M	R	R	R	R	R	R	L	L	U	R
Ferrous Chloride	U	U	U	U	U	R	L	U	R	U	U	L	R	R	R	U	U	U	U	U
Ferrous Sulfate	U	U	M	U	R	L	R	R	R	U	U	M	M	M	R	M	L	L	L	U
Hydrochloric Acid (conc.)	U	U	U	U	U	U	U	U	M	U	U	M	L	U	M	U	U	U	U	U
Hydrochloric Acid (dilute)	U	U	U	U	U	L	U	U	R	L	L	L	L	L	R	U	U	U	L	L
Hydrogen Chloride (dry gas)	R	L	L	R	L	U	U	U	R	L	L	R	R	U	R	U	U	U	L	L
Hydrofluoric Acid	L	U	U	U	U	U	M	U	U	M	L	M	M	M	R	U	U	U	U	L
Hydrocarbons (aliphatic)	R	R	R	R	R	R	R	R	R	R	R	R	R	R	R	R	R	R	R	R
Hydrogen Peroxide (conc.)	U	U	M	U	L	U	M	L	M	L		L	R	L	R	R	U	U	L	
Hydrogen Sulfide (dry)	M		L	R	L	R			R	L	M	L	R	L	R	U	U	U	R	R
Hydrogen Sulfide (wet)	L		L	R	L	L	R	R	M	U	M	L	M	L	R	U	U	U	U	R
Nitrating Acid (>15% H_2SO_4)	R	R	L	L	L		R	R	R	U		U	R	U	R	U	U	U		U
Nitrating Acid (<15% H_2SO_4)	U		L	L	L		R	R	R	U		U	R	U	R	U	U	U		U
Nitrating Acid (<15% HNO_3)	U		L	U	L		R		R	U		U	R	U	R	U	U	U		U
Nitrating Acid (<1% acid)	U		L	R	L		R		R	U		U	R	U	R	U	U	U		U
Nitric Acid (conc.)	U	U	M	M	R		R	R	R	U	L	U	M	U	R	L	U	U	L	U

Nitric Acid (dilute)	U	U	R	R	R	U	R	R	R	U	U	U	R	U	R	U	U	U	U	U
Nitrous Acid	U		R	R	R		R	R	R	R					R		R	R		U
Phenol (conc.)	M	M	L	R	L	R	R	R	R	M	R	M	M	M	R	L	U	U	L	M
Phosphoric Acid (100%)	U	U	L	L	R		R		R	L	L	M	R	R	R	U			M	M
Phosphoric Acid (hot >45%)	U	U	U	U	R	U	R	R	R	U	U	L	L	L	R	U	U	U	M	U
Phosphoric Acid (cold >45%)	U	U	L	R	R	L	R	L	R	L	L	M	R	M	R	U	U	U	M	L
Phosphoric Acid (<45%)	U	U	L	R	R	L	R	L	R	L	L	M	R	M	R	L	U	U	M	L
Potassium Carbonate	L		R	R		L	R	R	R	R	M	R	R	R	R	U	L	L	R	R
Potassium Chlorate	R		R	R			R	L	R	M	M	U	R	U	R	M	L	L		M
Potassium Chloride	R		L	L		R	R	R	R	M		R	R	R	R	L	L	L		M
Potassium Permanganate	M	M	M	M	M		R	R	R	L	M	U	R	U	R	R	R	R	U	M
Sodium Bicarbonate	L		R	R	R	R	R	R	R	R	R	R	R	R	R	R	L	L	R	R
Sodium Bisulfate	U	U	L	R	R		R	R	R	M		R	R	R	R	U	L	L	R	
Sodium Bisulfite	U		R	R			R	R	L						R	R	L	L	R	
Sodium Carbonate	M	M	M	M	R		R	R	R	M	L	M	R	R	R	U	M	M	L	M
Sodium Chlorate	L		R			R	L	L	R		M	U	R	U	R	M	M	M		
Sodium Chloride	M	M	L	L	L	L	R	R	M	M	L	M	M	L	R	L	M	M	M	M
Sodium Hydroxide (conc.)	L	L	L	R	R	R	R	R	L	R	R	R	M	R	R	U		L	U	R
Sodium Hydroxide (dilute)	R	R	M	M	M	M	R	R	M	L	L	R		R	R	U	R	R	U	L
Sodium Hydrosulfite							R		R	U	U	L	R	L	R	R	L	L		U
Sodium Hypochlorite	U	U	L	L	L	L	L	L	R	U	U	U	L	U	R	U	U	U	U	U
Sodium Nitrate	R	M	R	R	R	L	R	R	R	M	R	U	M	U	R	R	M	M	U	M
Sodium Phosphate	R		R	R	M		R		R	M		R	R	R	R	U	L	L		M
Sodium Silicate	R		R	R	M	R	R		R	M	M	R	R	R	R	L	L	L		R
Sodium Sulfate	R	R	L	L	R	R	R	R	R	M	R	R	R	R	R	R	R	R	R	R
Sodium Sulfide	M	R	L	R	R	R	R	R	R	M	M	R	R	R	R	U	U	U	L	M
Sodium Sulfite	M	R	L	L	L	R	R	R	U	L	L	U	R	U	R	L	L	L	R	L
Stearic Acid	L	R	R	R	R	L	R	R	R	R	R	R	R	R	R	L	L	L	L	R
Sulfur Dioxide (dry)	R	R	R	R	L	R	R	R	R	U	U	U	R	U	R	R	R	R	R	U
Sulfur Dioxide (wet)	U		L	R			R		L	U	U	U	R	U	R		U	U	R	U
Sulfur Trioxide	R		R	R		R	R	R	L	U	U				R	R	L	L		U
Sulfuric Acid (fuming 98%)	L	L	U	U		L	R	R	U	U	U	R	U	R	R	L	U	U	U	U

Table 2.3, continued

R = Recommended
M = Moderate Service
L = Limited Service
U = Unsatisfactory
Blank = No information

	Carbon Steel	Cast Iron and Ductile Iron	304 Stainless Steel	316 Stainless Steel	347 Stainless Steel	Nickel-Resist Iron	Carpenter 20; Durinet 20	Worthite	Duriron-Durichlor	Monel	Inconel	Hastelloy B	Hastelloy C	Hastelloy D	Chlorimet 3	Aluminum and Alloys	Copper and Cu Alloys	Brass	Lead	Nickel
Sulfuric Acid (hot, conc.)	U		U	U			M		R	U	U	U	U	R	M	U	U	U	L	U
Sulfuric Acid (cold, conc.)	M	M	R	R	L		R	R	R	M		R	R	R	R	L	U	U	R	
Sulfuric Acid (75-95%)	M	L	U	U	L	L	R	R	R	U	L	R	R	L	R	U	U	U	R	U
Sulfuric Acid (10-75%)	U	U	U	U	L	L	R	R	R	L	L	R	R	R	R	U	U	U	R	U
Sulfuric Acid (<10%)	U	U	U	L	L	L	L	R	R	L	L	R	R	R	R	L	U	U	R	L
Sulfurous Acid	U	U	L	R	L	U	R	R	U	U	U	U	M	M	R	L	U	U	L	U
Toluene	R	R	R	R	R	R	R	R	R	R	R	R	R	R	R	R	R	R	R	R
Water (fresh)	R	R	R	R	R	R	R	R	R	R	R	R	R	R	R	R	R	R	R	R
Water (distilled)	U	U	R	R	R	U	R		R	U	R	R	R	R	R	U	R	R	U	L
Zinc Chloride	U	U	U	L	U	L	R	R	R	M		M	M	M	R	U	U	U	L	M
Zinc Sulfate	U	U	M	M	M	R	R	R	R	M	M	M	M	M	R	L	M	M	M	M

Table 2.4. General Properties of the Corrosion Resistance of Nonmetals to Various Chemicals [11]

R = Recommended M = Moderate Service L = Limited Service U = Unsatisfactory Blank = No information	Carbon Ceramics			Rubbers			Plastics															
	Carbon and Graphite	Glass (Pyrex®)	Chemical Porcelain	Natural Rubber	Neoprene	Butadiene	Asphaltic Bitumastic	Acrylic (Lucite, Plexiglas)	Polyethylene	Polyvinylchloride	Saran	Kel-F	Teflon®[1]	Penton	Polystyrene (Styron)	Haveg 41	Heresite	Molded Phenol Formaldehyde (Durez)	Epoxy Resins	Nylon	Durcon 6	Woods–Maple, Oak, Pine
Aluminum Chloride	R	R	R	R	R	R	R		R	R	R	R	R	R	R	R	R	R	R	R		
Aluminum Hydroxide		R	R						R	R		R	R	R						R	R	
Aluminum Sulfate	R	R	R	R	R	R	R	R	R	R	R	R	R	R	R	R	R	R		R	R	R
Alums, Dilute	R	R	R	R	R	R	R	R	R	R	R	R	R	R	R	R	R	R	R		R	R
Amines (various)	R	R	R	L						U		R	R			R	R			R	R	
Ammonia Gas	R	R	R	L	R	R		R	R	L	U	R	R	R	U			R	R		R	
Ammonium Carbonate	R	R	R	R			R		R	R	R	R	R	R	R			R	R	R	R	
Ammonium Chloride	R	R	R	R	R	R	R	R	R	R	R	R	R	R	R	R	R	R	R	U	M	
Ammonium Hydroxide	R	L	R	L	L		L	R	R	R	U	R	R	R	R	R	R	U	R	R	R	
Ammonium Nitrate	R	R	R	L	L	R	R	R	R	R	R	R	R	R	R			R	R	R	R	
Ammonium Sulfate	R	R	R	R	R	R	R	R		R	R	R	R	R		R	R	R	R		U	
Benzene	R	R	R	U	U		U	U	L	U	L	R	R	M	U	L	R	R	R	R	R	
Calcium Carbonate	R	R	R	R	L					R	R	R	R	R						R	R	
Calcium Chlorate	R	R	R				R			R		R		R					R		R	
Calcium Chloride	R	R	R	R	R	R	R	R	R	R	R	R	R	R	R	R	R	R	R	U	R	
Calcium Hydroxide	R	R	R	R	R		R			R	R	R	R	R					R	R	R	
Calcium Hypochlorite	R	R	R	R	U	R	L		R	R	R	R	R	R	R	L	L	U	R	U	R	U

Table 2.4, continued

R = Recommended M = Moderate Service L = Limited Service U = Unsatisfactory Blank = No information	Carbon Ceramics			Rubbers			Plastics																
	Carbon and Graphite	Glass (Pyrex®)	Chemical Porcelain	Natural Rubber	Neoprene	Butadiene	Asphaltic Bitumastic	Acrylic (Lucite, Plexiglas)	Polyethylene	Polyvinylchloride	Saran	Kel-F	Teflon®[a]	Penton	Polystyrene (Styron)	Haveg 41	Heresite	Molded Phenol Formaldehyde (Durez)	Epoxy Resins	Nylon	Durcon 6	Woods–Maple, Oak, Pine
Calcium Sulfate	R	R	R	R	R		R			R	R	R	R	R					R	R	R	
Carbon Dioxide (dry)	R	R	R	R	R		R			R	R	R	R	R		R	R	R	R	R	R	
Carbon Dioxide (wet)	R	R	R	R	R	R	R	R	R	R	R	R	R	R	R	R	R	R		R	R	R
Chlorine (wet)	R	R	R	R	U	L	U		R	L	L	R	R	M	R	L	L	L	L	U	U	
Chromic Acid Solution	U	R	R	U	U	U	U	U	R	L	R	R	R	L	U	U	R	U	U	U	R	
Copper Chloride		R	R	L	R	R	R		R	R	R	R	R	R		R			R	U	R	
Copper Sulfate	R	R	R	R	R	R	R	U	R	R	R	R	R	R	R	R	R	R	R	U	R	
Fatty Acids	R	R	R	U	U	R	U		U	L	R	R	R	U	R	R	R	R	R	R	R	
Ferrous Chloride	R	R	R	R	R	R	R			R	L	R	R	R	R	R	R	R	R	U	R	
Ferrous Sulfate	R	R	R	R	R	R	R		R	R	L	R	R	R	R	R	R	R	R	U	M	
Hydrochloric Acid (conc.)	R	R	R	R	L	R	R	R	R	R	R	R	R	R	U	R	R	R	R	U	R	U
Hydrochloric Acid (dilute)	R	R	R	R	L	R	R	R	R	R	R	R	R	R	R	R	R	L	R	U	R	R
Hydrogen Chloride (dry gas)	R	R	R				U			R		R	R						R		R	
Hydrofluoric Acid	U	U	U	U	U		U	R	R	L	U	R	R	M	R	U	U	L	R		R	
Hydrocarbons (aliphatic)	R	R	R	U	R	R		R				R	R		R	R	R	L			M	
Hydrogen Peroxide (conc.)		R	R	L	U	R	L	R		R		R	R	R	U	R	R	R		U	R	
Hydrogen Sulfide (dry)		R	R	R		R	R			R		R	R		R			R	R	U	R	
Hydrogen Sulfide (wet)		R	R							R		R	R	R							R	

Nitrating Acid (>15% H_2SO_4)	U	R	R	U			U					R	R			U	R		U		R
Nitrating Acid (<15% H_2SO_4)	U	R	R	U			U					R	R			L	R				R
Nitrating Acid (<15% HNO_3)	U	R	R	U			U					R	R			L	R				R
Nitrating Acid (<1% acid)	U	R	R	U			U					R	R			L	R				M
Nitric Acid (conc.)	U	R	R	L	U	U	U		U	U	L	R	R	U	U	U	R	R	U	U	R
Nitric Acid (dilute)	L	R	R	U	U	R	U	R	L	R	R	R	R	M	R	L	R	L	U		R
Nitrous Acid		R	R	L	U	R	R					R	R	R							R
Phenol (conc.)	R	R	R	L	L	R	U	R		L	L	R	R	M		L	R	L		U	R
Phosphoric Acid (100%)	M	L	R	R	R	R	R		R	R	L	R	R		U	R	R	U		L	R
Phosphoric Acid (hot >45%)	R	L	U	L	L		U		L	R		R	R		U	R	R	U	R		R
Phosphoric Acid (cold >45%)	R	R	L	L	L		R		R	R	R		R	R	R	R	R		R		R
Phosphoric Acid (<45%)	R	R	L	R	L				R	R	R		R	R		R	R			U	R
Potassium Carbonate	R	L	R	R	R		R		R	L	R		R	R					R	R	R
Potassium Chlorate	R	R	R							R	R		R	R						U	R
Potassium Chloride	R	R	R	R	R		R		R	R	R		R	R		R			R	R	R
Potassium Permanganate	R	R	R	L	U		U		R	R	L		R	R	R			R	R	U	R
Sodium Bicarbonate	R	R	R	R	R	R	R	R		R	R		R	R	R	R		R	R	R	R
Sodium Bisulfate	R	R	R	R	R	R				R	R		R	R	R	R	R	R	R		R
Sodium Bisulfite	R	R	R	R	L	R	R		R	R			R	R				R	R	U	R	R
Sodium Carbonate	R	L	R	R	R	R		U	R	R	R	R	R	R	R	R	R	R	R	R	R	M
Sodium Chlorate	R	R	R	R	R	R	R	R	R	R	R		R	R	R			R		U	R	R
Sodium Chloride	R	R	R	R	R		R	R	R	R	R	R	R	R	R	R	R	R	R	R	R	R
Sodium Hydroxide (conc.)	R	L	U	R	R	R	R	R	R	R	U	R	R	R	R	U	U	U	R	R	R	U
Sodium Hydroxide (dilute)	R	L	L	R	R	R	R	R	R	R	L	R	R	R	R	U	L	U	R	R	R	U
Sodium Hydrosulfite		R	R	R		R							R	R				R			R	
Sodium Hypochlorite	U	R	R	R	U	R	L			R	R		R	R	R	U	R	L	U	U		
Sodium Nitrate	R	R	R	R	R	R	R			R	R		R	R	R	R	R	R	R	U	R	
Sodium Phosphate		L	R	R	L	R	R	R		R			R		L	L		R	R	R	R	
Sodium Silicate		L	R	R	R	R	R			R			R		R			R		R	R	
Sodium Sulfate	R	R	R	R	R		R		R	R	R		R	R		R	R		R	R	R	
Sodium Sulfite	R	L	R	R	R	R			R	R	R		R		R	R	R		R	R	M	U
Sodium Sulfide	R	R	R	R	U	R	R			R	R		R	R		R	R	L	R	R	R	

Table 2.4, continued

	Carbon Ceramics			Rubbers			Plastics															
R = Recommended M = Moderate Service L = Limited Service U = Unsatisfactory Blank = No information	Carbon and Graphite	Glass (Pyrex®)	Chemical Porcelain	Natural Rubber	Neoprene	Butadiene	Asphaltic Bitumastic	Acrylic (Lucite, Plexiglas)	Polyethylene	Polyvinylchloride	Saran	Kel-F	Teflon®[a]	Penton	Polystyrene (Styron)	Haveg 41	Heresite	Molded Phenol Formaldehyde (Durez)	Epoxy Resins	Nylon	Durcon 6	Woods–Maple, Oak, Pine
Stearic Acid		R	R	L	U		U		R	R	R		R	R		R	R		R	R	R	
Sulfur Dioxide (dry)		R	R	L	U	L	R			R	L		R	R		R			R	L	R	
Sulfur Dioxide (wet)		R	R	L	U					R	L		R	R						U	R	
Sulfur Trioxide		R	R	R	U	R	U			R			R						R	R	R	
Sulfuric Acid (fuming 98%)	U	R			U		R	U		U			R	U	U			U	U		R	U
Sulfuric Acid (hot, conc.)		R		U	U								R	L		U			U		R	U
Sulfuric Acid (cold, conc.)	U	R	R	U	U			L		R	L		R	L		L			U	U	R	U
Sulfuric Acid (75-95%)	R	R	R		U		R		R	R	L		R	M	L	L		L	L		R	
Sulfuric Acid (10-75%)	R	R	R	R	L	R	R	R	R	R	R	R	R	R	R	R		L	R	L	R	L
Sulfuric Acid (<10%)	R	R	R	R	R	R	R	R	R	R	R	L	R	R	R	R		R		L	R	L
Sulfurous Acid	R	R	R	L	R		R		U	R	L		R	R	R	R		R	R	U	M	R
Toluene	R	R	R	U	U	U		U	L	U	L	L	R	M	U	L		L		R	R	R
Water (fresh)	R	R	R	R	R	R	R	R		R	R		R	R	R			R			R	R
Water (distilled)	M	M	R	R	R			R		R			R	R							R	
Zinc Chloride	R	R	R	R	R	R	R		R	R	R		R	R	R	R		R	R	L	R	
Zinc Sulfate	R	R	R	R	R		R		R	R	R		R	R	R	R		R	R	R	R	

[a]Registered trademark of E. I. du Pont de Nemours and Company, Inc., Wilmington, Delaware.

Table 2.5. Corrosion Rates of Steel and Zinc Panels Exposed for Two Years [11]

No.	Location	mils/yr		Environment[a]
		Steel	Zinc	
1.	Norman Wells, NWT, Canada	0.06	0.006	R
2.	Phoenix, AZ	0.18	0.011	R
3.	Saskatoon, Sask., Canada	0.23	0.011	R
4.	Vancouver Island, BC, Canada	0.53	0.019	RM
5.	Detroit, MI	0.57	0.053	I
6.	Fort Amidor, Panama C.Z.	0.58	0.025	M
7.	Morenci, MI	0.77	0.047	R
8.	Ottawa, Ont., Canada	0.78	0.044	U
9.	Potter County, PA	0.81	0.049	R
10.	Waterbury, CT	0.89	0.100	I
11.	State College, PA	0.90	0.045	R
12.	Montreal, Que., Canada	0.94	0.094	U
13.	Melbourne, Australia	1.03	0.030	I
14.	Halifax, NS, Canada	1.06	0.062	U
15.	Durham, NH	1.08	0.061	R
16.	Middletown, OH	1.14	0.048	SI
17.	Pittsburgh, PA	1.21	0.102	I
18.	Columbus, OH	1.30	0.085	U
19.	South Bend, PA	1.32	0.069	SR
20.	Trail, BC, Canada	1.38	0.062	I
21.	Bethlehem, PA	1.48	0.051	I
22.	Cleveland, OH	1.54	0.106	I
23.	Miraflores, Panama C.Z.	1.70	0.045	M
24.	London (Battersea), England	1.87	0.095	I
25.	Monroeville, PA	1.93	0.075	SI
26.	Newark, NJ	2.01	0.145	I
27.	Manila, Philippine Islands	2.13	0.059	U
28.	Limon Bay, Panama C.Z.	2.47	0.104	M
29.	Bayonne, NJ	3.07	0.188	I
30.	East Chicago, IN	3.34	0.071	I
31.	Cape Kennedy, FL 1/2 mile	3.42	0.045	M
32.	Brazos River, TX	3.67	0.072	M
33.	Pilsey Island, England	4.06	0.022	IM
34.	London (Stratford), England	4.40	0.270	I
35.	Halifax, NS, Canada	4.50	0.290	I
36.	Cape Kennedy, FL 180 ft.	5.20	0.170	M
37.	Kure Beach, NC 800 ft.	5.76	0.079	M
38.	Cape Kennedy, FL 180 ft.	6.52	0.160	M
39.	Daytona Beach, FL	11.7	0.078	M
40.	Widness, England	14.2	0.400	I
41.	Cape Kennedy, FL 180 ft.	17.5	0.160	M
42.	Dungeness, England	19.3	0.140	IM
43.	Point Reyes, CA	19.8	0.060	M
44.	Kure Beach, NC 80 ft.	21.2	0.250	M
45.	Galetea Point, Panama C.Z.	27.3	0.600	M

[a] R rural; RM rural-marine; SI semi-industrial; SR semi-rural; M marine; I industrial; IM industrial-marine; U urban

1. Availability - In required quantities (single, multiple, limited, unlimited)
   - In different forms (bar, casting such as sand, centrifugal, die, permanent mould, etc., extrusion, forging, impact extrusion, pressing, sintered, powder pressing)
   - In metallized and pretreatment forms (galvanized, plastic coated, plated, prefabrication treated)
   - In cladded forms
   - Uniformity of material
   - Freedom from defects
   - Delivery time
2. Cost in different forms - Bar, shape, plate, sheet
   - Casting (sand, centrifugal, die, permanent mould, etc.)
   - Extrusion
   - Forging
   - Impact extrusion
   - Pressing
   - Sintered
   - Powder pressing
3. Size limitations and tolerances in different forms
   - Gauge
   - Length
   - Weight
   - Width

Tables 2.3 through 2.5 give general corrosion-resistance ratings of different materials. Table 2.3 lists various metals and Table 2.4 gives ratings for various nonmetals. Table 2.5 gives typical corrosion rates of steel and zinc panels exposed to the atmosphere in various locations about the U.S. Figure 2.1 also illustrates relative corrosion rates of steel and zinc in major areas of the world.

2.4 DESIGN GUIDELINES

Often, complex apparatus and systems, process piping arrangements and even support structures utilize different metals, alloys or other materials. These are often employed in corrosive or conductive environments and, in practice, the contact of dissimilar materials cannot be avoided totally. It is important that the designer minimize the damaging effects of corrosion by optimizing the compatibility of materials either by selection or arrangement in the overall design. Compatible materials are those that will not cause an uneconomic breakdown within the system, even though they are utilized together in a particular medium in appropriate relative sizes and compositions. In addition to material influences on each other by virtue of inherent or induced differences of electric potentiality, adverse chemical reactions can occur as a result of changes in materials caused by environmental variations. All these possibilities must be examined thoroughly by the designer.

The following general considerations should be followed in designing all types of process equipment:

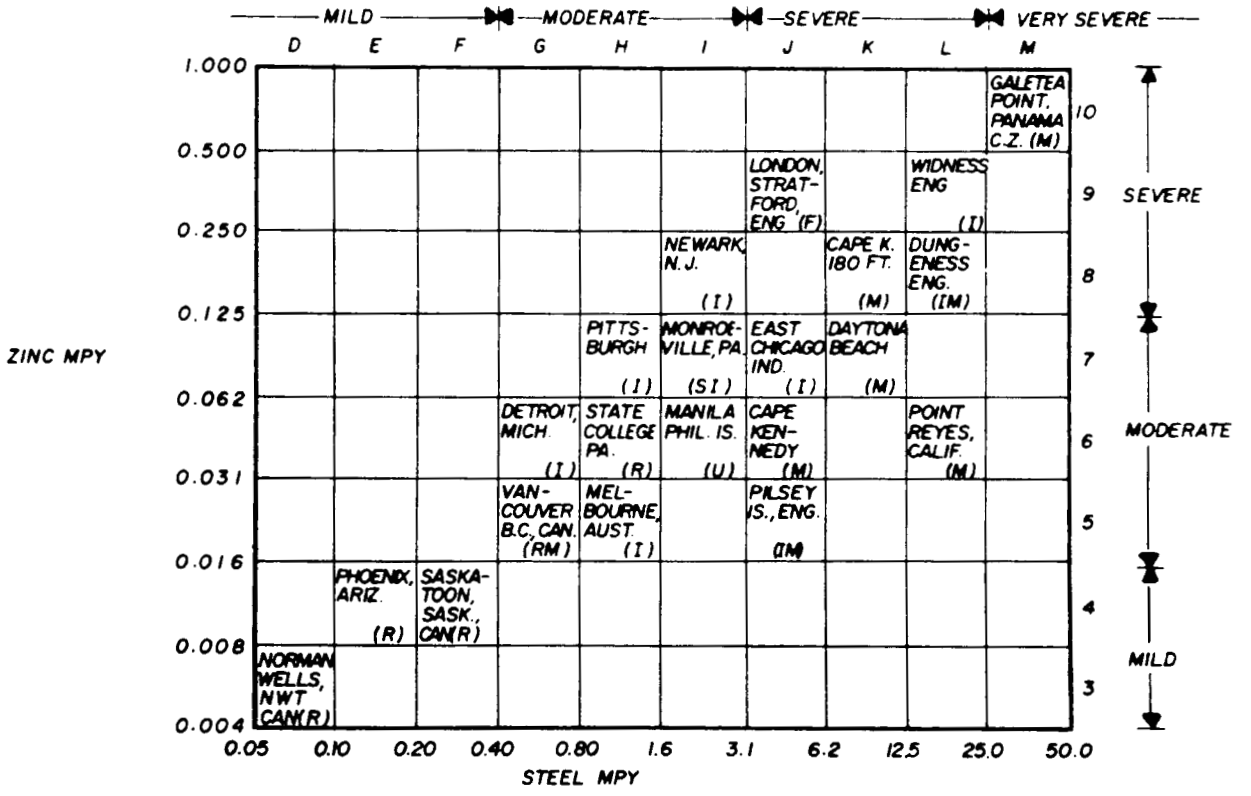

Figure 2.1 Comparison of corrosion rates of zinc and steel in various parts of the world [11].

1. Dissimilar metals should be in contact (either directly or by means of a conductive path such as water, condensation, etc.) only when the functional design so dictates.

2. Scales of Galvanic Potentials are useful indicators of galvanic corrosion; however, information is needed on the amount of current flowing between dissimilar metals.

3. To ensure compatibility, detailed engineering descriptions of all materials and their metallurgical properties are needed. General information (e.g., mild steel) does not provide sufficient data to establish compatibility in conductive or corrosive media.

4. Galvanic corrosion of dissimilar metals can be minimized by controlling humidity near such bimetallic connections. In general, continuously dry bimetallic joints do not corrode.

5. Avoid faying surfaces of dissimilar metals by separating them completely. Examples of poor and proper connections are given in Figure 2.2. Note that dielectric separation can be provided in several manners, e.g., insulating gaskets (synthetic rubber, PTFE, etc.), spreadable sealants, coatings.

6. The formation of crevices between dissimilar metals should be avoided. Corrosion at such connections is generally more severe than either galvanic or crevice corrosion alone. Also, crevices between metals and certain types of plastics or elastomers may induce accelerated rates of combined crevice and chemical attack. Testing is recommended prior to establishing final design specifications.

7. Noble metals should be specified for major structural units or components, particularly if the design requires that these are smaller than adjoining units. There is an unfavorable area effect of small anode and large cathode. Corrosion of a relatively small anodic area can be 100–1000 times more severe than the corrosion of bimetallic components, which have the same area submerged in a conductive medium. Hence, less noble (anodic) components should be made larger or thicker to allow for corrosion. In addition, provision should be made for easy replacement of the less noble components.

8. Brazing or welding alloys should be more noble (i.e., cathodic) than at least one of the joined metals. Also, these alloys should be compatible to both the other metals.

9. Fasteners made of dissimilar metal should be insulated completely from both metals of the joint (or at least the one that is least compatible with the metal of the fastener).

10. Clad metals are candidates for galvanic corrosion along exposed edges. An example is copper/aluminum clad to aluminum.

11. Proper system and sequences of welding attachment of bimetallic pads for structures and equipment should be specified to avoid distortion and input stresses.

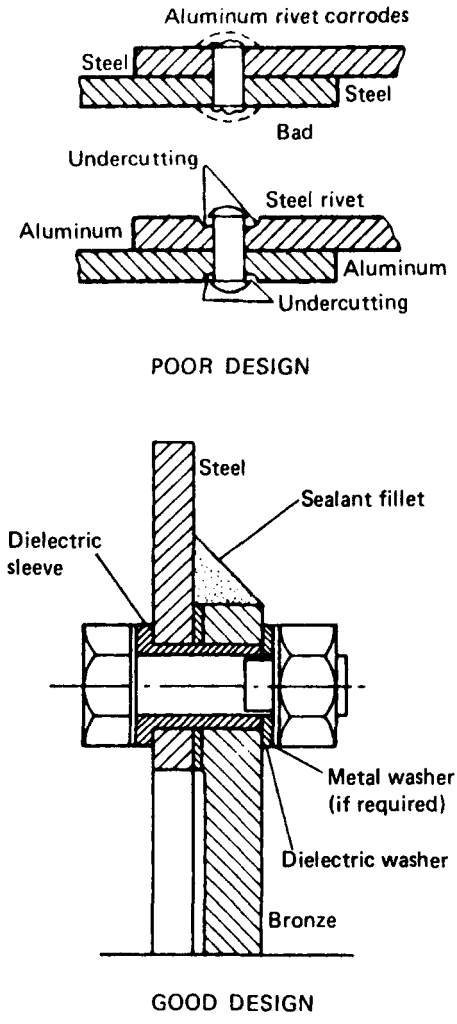

Figure 2.2. Examples of poor and proper connections of dissimilar metals.

12. In aluminum castings, integral corrosion-resistant steel inserts may be used. An example is shown in Figure 2.3.

13. Sources of mercury (e.g., mercury thermometers) should be avoided in the vicinity of aluminum and copper alloy equipment.

14. Avoid coupling carbon or graphite components with other metals in conductive environments.

15. Designs that establish large temperature gradients in equipment resulting in adverse polarization of metals should be avoided.

16. If dielectric separation of fasteners in noncompatible joints cannot be implemented readily, fasteners should be coated with a zinc chromate primer and exposed ends encapsulated. This is illustrated in Figure 2.4.

17. Use sealing (encapsulating or enveloping type with shrinkable plastic) on bimetallic joints if geometrical arrangements prohibit access to such joints for replacement.

The following general guidelines are most applicable to piping system designs.

1. Ensure effective separation between piping sections of dissimilar metals. Examples of this are illustrated in Figure 2.5. As shown, dielectric nonabsorbent gaskets of adequate thickness can be inserted between dissimilar

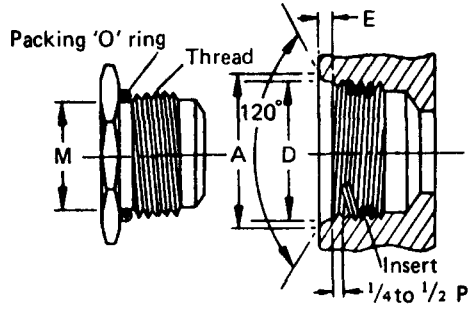

Figure 2.3. Example of a corrosion-resistant steel insert used in an aluminum casting.

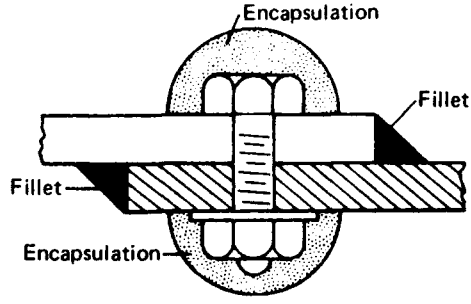

Figure 2.4. Encapsulation of exposed metal connections.

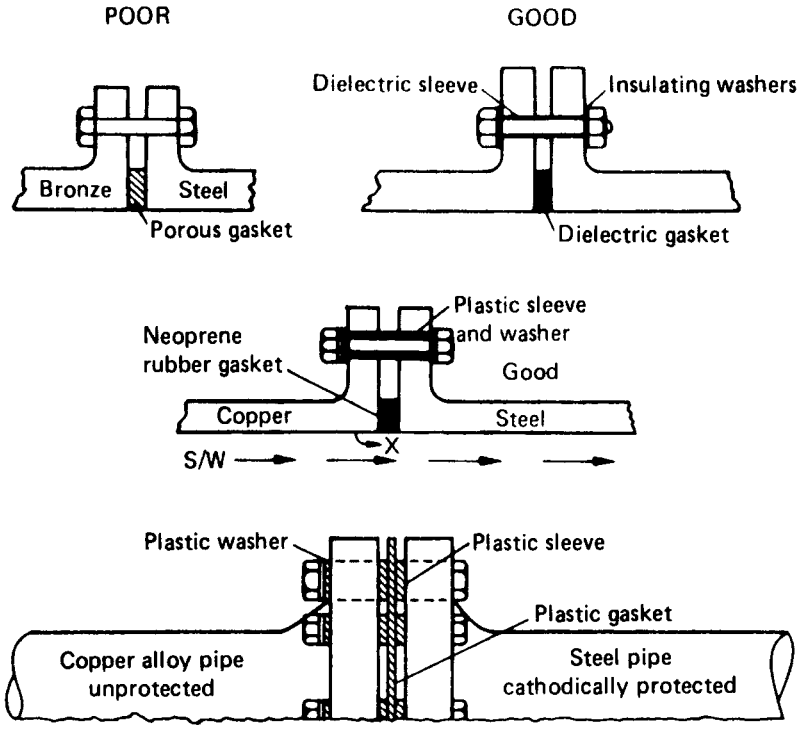

Figure 2.5. Gasket insertion between pipe flanges for sealing purposes and to minimize galvanic corrosion between dissimilar piping metals.

pipe connections. Note that graphite packings and gaskets should not be used for dielectric separation except for steam service or similar applications at elevated temperatures, as with nonconductive media.

2. Piping should not be directly attached to dissimilar metal structures via conductive materials.

3. Graphite and carbon packing should not be used in pipe systems containing conductive media upstream of heat exchangers and other critical equipment. Graphite particles can deposit onto tube bundles in heat exchangers and promote galvanic corrosion. Where possible, use insert seals and packing.

4. Avoid fitting copper alloy pipes upstream of carbon steel equipment. Salts of carbon from copper-base pipes can dissolve in solution and pose problems to carbon-steel components and vessels downstream. If the use of copper alloy pipes is unavoidable, sacrificial sections of mild steel pipe can

be inserted between such connections. These sacrificial sections should be easily accessible to enable replacement and thus should be provided with adequate wall thickness to meet a well-planned maintenance program frequency.

5. Pickling and passivation of Monel and stainless steel pressure vessels should be specified to prevent deep pitting.

6. In situations in which piping protrudes partitions or bulkheads of dissimilar metals, proper precautions should be taken against galvanic corrosion. Possible solutions include the use of dielectric gaskets or sleeves and the use of plastic adhesive tapes. Examples are illustrated in Figure 2.6.

7. In buried pipeline installations, avoid contact of piping with structures of dissimilar metals. Also, where possible, specify uniform quality, grade and surface conditions. Various quality sections should not be welded together in buried installations.

8. Tinning of copper piping or components is a good approach toward minimizing galvanic action between dissimilar metals.

9. Heat exchangers that utilize copper coils are potential candidates for galvanic corrosion due to dissolved copper salts interacting with the galvanized steel shell. This problem can be avoided by nickel plating the coils. The coils then can be separated from direct contact with the vessel via insulation. Also, it is preferable to conduct the water on the tube side of heat exchangers.

The above factors represent considerations that the design engineer must account for to ensure compatibility between components and equipment materials. In addition to these, there are geometric considerations that can minimize corrosion problems if accounted for in design. The following are general guidelines pertaining to geometry in a design aimed at minimizing corrosion. The overall design approach involves the selection of the optimum geometry for a piece of equipment that is less likely to undergo certain types of corrosion, either directly or indirectly. Such shapes, forms, combinations of forms and their method of attachment, along with their fabrication technique and treatment, should not aggravate corrosion.

1. For structures and equipment, the utility should be located where it cannot be affected by natural and climatic conditions. This includes (1) corrosive pollution that may be airborne, (2) prevalent winds, and (3) surface water currents from near or remote sources.

2. Undrainable traps that accumulate liquids and absorbent solid wastes should be avoided. Structures should be designed to be self-draining.

3. Provisions should be made for the removal of moisture or other corrosive media from critical areas.

4. Laps and crevices should be avoided if possible. If they cannot, then effective seals should be used (particularly in areas of heat transfer) between metal and a porous material or where aqueous environments contain inorganic chemicals or dissolved oxygen.

5. Laps should be faced downward on exposed surfaces.

6. Effort should be made to design shapes that will reduce the effects of high fluid velocity, turbulence and the formation of gas bubbles.

7. Asymmetrical shapes of unequal thickness should be avoided for galvanizing. Extremes in weight and cross sections of design members also should be avoided.

8. Impellers should have shapes that minimize high turbulence formation and reduce low-pressure buildup at their tips, which can lead to cavitation.

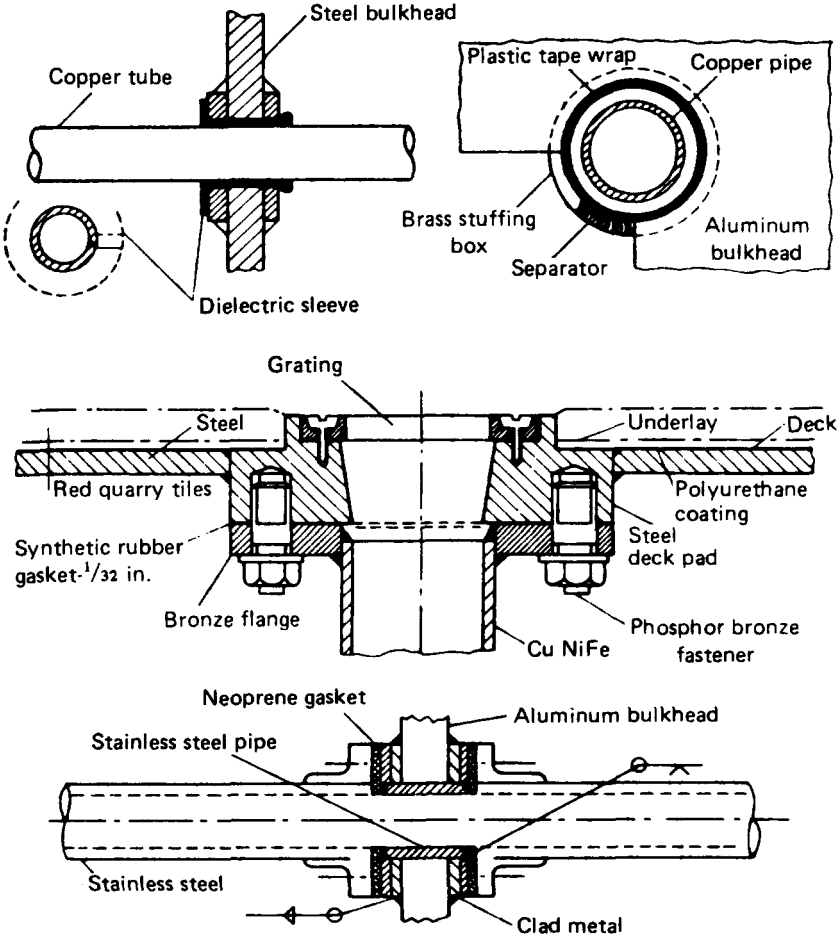

Figure 2.6. Examples of minimizing galvanic corrosion when piping penetrates partitions and bulkheads.

For piping arrangements and vessels, the following geometric considerations are recommended.

9. Piping systems should be designed for an economic flow velocity. For relatively clean fluids, a recommended velocity range where minimum corrosion can be expected is 2 to 10 fps. If piping bores exist, maximum fluid velocities may have a mean velocity of 3 fps for a 3/8-in. bore to 10 fps for an 8-in.-diameter bore. Higher flow velocities are not uncommon in situations that require uniform, constant oxygen supply to form protective films on active/passive metals.

10. Condensate filters, deaerators, traps, drains and other means should be provided for the removal of rust, debris and any other contaminants from the system that may promote corrosion.

11. The interior of piping systems should be streamlined for easy drainage. Stubs and dead ends should be avoided, and pipelines should be sloped continuously downstream to their outlets. Elbows should be sloped for drainage purposes.

12. Turbulence, rapid surging, excessive agitation and impingement of fluids onto piping walls should be avoided. Throttle valves, orifices and similar flow-regulating devices should be employed only where necessary. Control devices should be selected partly on the basis of minimum resistance to the flow. For example, a venturi tube is preferable to an orifice plate [12]. In general, one should avoid using flow-controlling devices in close proximity to bends or changes of flow direction downstream.

13. When using soft metals such as lead, copper and their alloys, avoid sudden changes in the flow direction, such as sharp bends.

14. To minimize nucleation, piping systems should be designed to maintain absolute pressure as high as possible.

15. The bend radii of pipes should be designed to be as large as possible. A minimum of three times the pipe diameter is recommended to maintain safe, economic flow velocities.

16. For heat exchangers, coolers, heaters, condensers and related equipment, welding of tubes in tube sheets is recommended over the rolling-in system. Tubes should extend beyond the tube sheets. Also, the design should be such that cooling water starvation at the periphery of the tube bundle is avoided (this is illustrated in Figure 2.7). Heat exchanger tubes should be slanted to provide proper drainage.

17. Condensers should be designed to provide a realistic amount of excess auxiliary exhaust steam with reasonable velocity steam inlets and exhausts. Also, steam baffles should be slanted away from condenser bracing and other critical areas.

18. For tanks and vessels, welded units are preferred over riveted or bolted designs. Fastener joints provide sites for crevice corrosion. Undrainable horizontal flat tops of tanks should be avoided unless proper drainage schemes are included in the design. Tank bottoms should be sloped toward

drain holes to eliminate the collection of liquids and sludge after emptying. Examples of good and poor designs for this latter case are shown in Figure 2.8.

19. Inlet pipes to vessels should be directed toward the center. Also, the inlet pipe should protrude into the tank and as close as possible to the normal

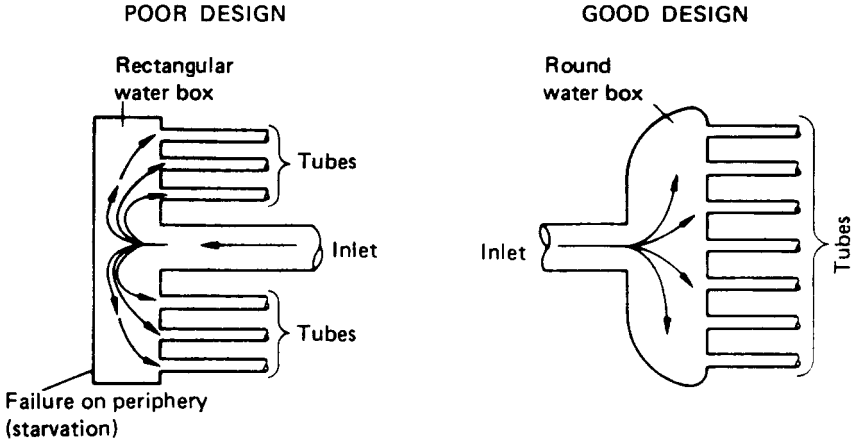

Figure 2.7. Poor and good designs for heat exchanger inlets.

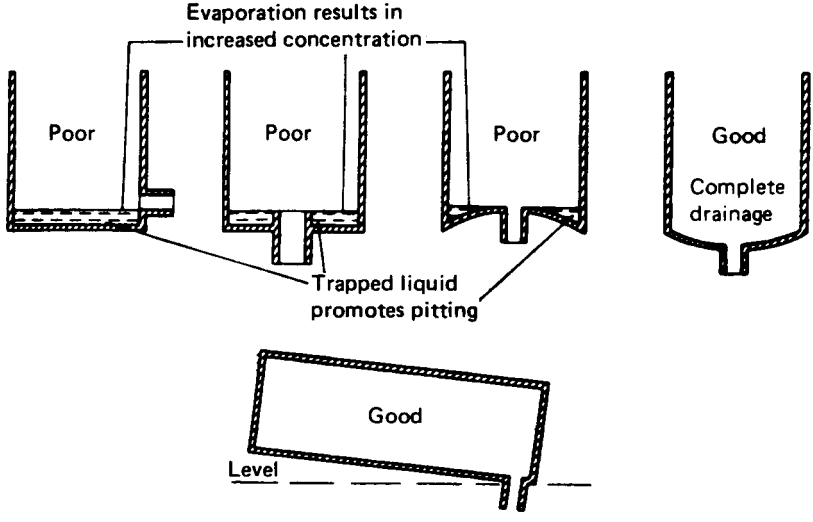

Figure 2.8. Poor and good designs for vessel drainage.

level. This minimizes splashing during filling. Splashing causes precipitation to accumulate on walls, producing fouling and potential corrosion sites.

20. With side inlets and outlets on vessels, protrusions should be avoided that can cause additional turbulence.

21. Tanks designed to hold hygroscopic corrodants should be well sealed to prevent their breathing damp air.

22. Proper vessel designs should avoid discharges from high-positioned coolers directed down a pipe. This situation reduces pressure in coolers via siphon action.

23. Partially filled reactors and storage vessels containing vapors of corrosive constituents should be vented or provided with either vacuum removal or with a condenser return to the system.

2.5 GLOSSARY OF CORROSION TERMS

The following terms are widely used in the corrosion engineer's vocabulary. This subsection is included for the newcomer and defines terms used throughout the remainder of the text.

Active—a free corroding condition.

Aluminizing—a process for impregnating a metal's surface with aluminum to provide protection against oxidation and corrosion.

Anchor Pattern (Surface Profile)—the shape and amplitude of the profile of blast-cleaned or grooved steel, which influences the bond between metallic or paint films and the substrate.

Anion—negatively charged ions that migrate toward the anode of a galvanic cell.

Anode—the electrode at which oxidation of the surface or some component of the solution is occurring.

Anode Polarization—the difference between the potential of an anode passing current and the steady-state or equilibrium potential of the electrode with the same electrode reaction.

Anodic Inhibitor—a chemical constituent that reduces the rate of anodic or oxidation reaction.

Anodic Metallic Coating—a special coating usually comprised, either entirely or in part, of an anodic metal, which is electrically positive to the substrate to which it is applied.

Anodic Protection—a technique for reducing corrosion of a metal surface via passing sufficient anodic current to it to cause its electrode potential to enter into the passive state.

Anodizing—the formation of a hard, corrosion-resistant oxide film on metals via anodic oxidation of the metal in an electrolytic solution.

Base Potential—the potential toward the negative end of a scale of electrode potentials.

Blast Peening—a treatment for relieving tensile stress via inducing beneficial compressive stress in the surface by kinetic energy of rounded abrasive particles.

Breakaway Corrosion—a sudden increase in corrosion rate, particularly under conditions of high-temperature dry oxidation.

Cathode—the electrode of an electrolytic cell where reduction takes place. During corrosion, this is the area at which metal ions do not enter the solution. During cathodic reactions, cations take up electrons and discharge them, hence reducing oxygen. That is, there is a reduction from a higher to a lower state of valency.

Cathodic Inhibitor—a chemical constituent that reduces the rate of cathodic reaction.

Cathodic Protection—a means of reducing the corrosion rate of a metal surface by passing sufficient cathodic current to it to cause its dissolution rate to become very low.

Cation—positively charged ions that migrate to the cathode in a galvanic cell.

Caustic Embrittlement—a form of stress corrosion cracking that occurs in steel exposed to alkaline solutions.

Composite Plate—an electrodeposit that consists of two or more layers of metals deposited separately.

Corrosion Fatigue Limit—the maximum stress that a metal can endure without failure. This is determined in a stated number of stress applications under defined conditions of stressing and corrosion.

Corrosion Potential—the potential of a corroding surface in an electrolyte relative to some reference electrode.

Corrosion Rate—the rate at which corrosion occurs. It is usually reported in units of inches of penetration per year (ipy), mils of penetration per year (mpy), milligrams of weight loss per square decimeter per day (mdd); microns per year (μm/yr), or millimeters per year (mmpy). Note that 1μm = 0.0395 mils.

Couple—an electrical contact made between two dissimilar metals.

Critical Humidity—the relative humidity (RH) at and above which the atmospheric corrosion rate of a metal increases significantly.

Current Density—the average current flowing in an electrolyte (common units are amperes per square foot (A/ft^2), amperes per square decimeter (A/dm^2), amperes per square centimeter (A/cm^2), or milliamperes per square centimeter (mA/cm^2) of either cathode or anode surface.

Deactivation—in corrosion control refers to the removal of a constituent of a liquid that is active in promoting corrosion.

Deposit Attack—to localized corrosion under, and resulting from, a deposit on a metal surface.

Dielectric Strength—the magnitude of electrical nonconductance of a material.

Differential Aeration–the stimulation of corrosion at a localized area by differences in oxygen concentration in the electrolytic solution that is in contact with the metal surface.

Diffusion Coating–application of a metallic coating. The chemical composition of the metal is modified by diffusing the coating into the substrate at the metal's melting temperature.

Electrogalvanizing–the process of galvanizing by electroplating.

Electrolysis–a reaction in which chemical change results in an electrolyte being produced from the passage of electric current.

Electrolyte–chemical constituent, usually a liquid, containing ions that migrate in an electric field.

Electrolytic Cleaning–method of degreasing/descaling metal surfaces via electrolysis. The metal is utilized as an electrode.

Electrophoretic Plating–the production of a layer of deposit as a result of discharge of colloidal particles in solution onto an electrode.

Electroplating–the process of electrodeposition onto a metallic substrate of a thin adherent layer of a metal or alloy having desirable chemical, physical and/or mechanical properties.

Exfoliation–also called lamination, refers to the falling away of metal in layers.

Filiform Corrosion–type of corrosion that takes place under a film in the form of randomly distributed hairlines.

Flame Plating–the deposition of a hard metal coating onto a substrate via application of molten metal at supersonic velocities.

Flash Corrosion–light surface oxidation of cleaned metals that are exposed to the environment for short times.

Fouling–deposition of scale materials on metal surfaces.

Galvanizing–the method of coating iron or steel with zinc by immersion of the metal in a bath of molten zinc.

Green Rot–a corrosion product particular to nickel alloys and greenish in color that normally results from carburization and oxidation of certain nickel alloys at temperatures around 1000°C (1832°F).

Hermetic Seal–an impervious seal made by the fusion of metals of ceramics, which prevents the passage of gas or moisture. The seal can be achieved by brazing, soldering, welding, fusing glass or ceramics.

Ion Erosion–the deterioration of materials caused by ion impact.

Iron Rot–the deterioration of wood caused by contact with iron.

Laminar Scale–rust formation in heavy layers.

Localized Attack–corrosion in which one area of the metal surface is primarily anodic and another predominantly cathodic.

Metal Cladding–the combination of two or more metal compounds bonded metallurgically face to face.

Metallic Coatings–coatings that consist fully or partially of metal applied

to metals or nonmetals for the purpose of protection or to improve certain properties.

Metallizing–also called metal spraying; refers to the application of a metal coating to a surface (either metallic or nonmetallic) by means of a spray of molten particles.

Mill Scale–an oxide layer on metals produced by metal rolling, hot forming, welding or heat treatment.

Noble–positive direction of the electrode potential.

Noble Potential–a potential that is more cathodic (i.e., positive) than the standard hydrogen potential.

Oxidation–the loss of electrons by a constituent in a chemical reaction.

Parting–the selective attack of one or more constituents of a solid solution alloy.

Passivation–a reduction of the anodic reaction rate of an electrode involved in an electrochemical reaction, such as corrosion.

Passivity–a condition of a metal or alloy in which the material is normally thermodynamically unstable in a given electrolytic solution but remains visibly unchanged for a prolonged period. The electrode potential of a passive metal is always appreciably more noble than its potential in the active state.

Peen Plating–the deposition of the coating metal (in powder form) on the substrate via a tumbling action in the presence of peening shot.

Pickling–a form of chemical and electrolytic removal of mill scale and corrosion products from the surfaces of metals in an acidic solution. Electrolytic pickling may be anodic or cathodic, depending on the polarization of the metal in the solution.

Plasma Plating–deposition on critical areas of metal coatings resistant to wear and abrasion; normally this is done by means of a high velocity and high-temperature ionized inert gas jet.

Rash Rusting–also called peak spotting; refers to a local corrosion due to inadequate coating of the peaks of a rough surface.

Reduction–the reverse of oxidation; a chemical change of state in which one constituent gains electrons.

Rust–a corrosion product consisting mainly of hydrated iron oxide; the term is used to describe the corrosion products of iron and ferrous ions.

Rust Creep–also called underfilm corrosion; refers to corrosive action that results in damaged or uncoated areas and extends subsequently under the surrounding inert protective coating.

Scaling–the formation of thick corrosion products as layers on a metal surface; in piping systems it is usually the deposition of water-insoluble constituents on a metal surface.

Season Cracking–stress corrosion cracking of brass.

Sherardizing–the process of coating iron or steel with zinc by heating the product to be coated in zinc powder at a temperature below the melting point of zinc.

Stress-Accelerated Corrosion–increased corrosion rate caused by applied stresses.

Surface Preparation–the cleaning of a surface prior to treatment.

Surface Treatment–any suitable means of cleaning and treating a surface that produces a desired surface profile that has required coating characteristics.

Tuberculation–the formation of localized corrosion products scattered over the surface in the form of knob-like tiles.

Vacuum Deposition–also vapor deposition or gas plating; the deposition of metal coatings by means of precipitation (sometimes in vacuum) of metal vapor onto a treated surface. The vapor may be produced by thermal decomposition, cathode sputtering or evaporation of the molten metal in air or an inert gas.

Weld Decay–localized corrosion of weld metal.

REFERENCES

1. Butler, G., and H. C. K. Ison. *Corrosion and Its Prevention in Waters* (London: Leonard Hill Publishers, 1966).
2. Evans, U. R. *The Corrosion and Oxidation of Metals: Scientific Principles and Practical Applications* (London: Edward Arnold Publishers, Ltd., 1960).
3. Pludek, V. R. *Design and Corrosion Control* (New York: John Wiley & Sons, Inc., 1977).
4. Tomashov, N. D. *Theory of Corrosion and Protection of Metals: The Science of Corrosion* (New York: Macmillan Publishing Co., Inc., 1966).
5. Fontana, M. G., and N. D. Greene. *Corrosion Engineering* (New York: McGraw-Hill Book Co., 1978).
6. Fontana, M. G., and R. W. Staehle. *Advances in Corrosion Science and Technology,* Vol. 2 (New York: Plenum Publishing Corp., 1972).
7. Staehle, R. W. "Comments on the History of Engineering and Science of Stress Corrosion Cracking," in *Proc. Fundamental Aspects of Stress Corrosion Cracking* (Houston, TX: National Association of Corrosion Engineers, 1969).
8. LaQue, F. L., and H. R. Copson. *Corrosion Resistance of Metals and Alloys* (New York: Van Nostrand Reinhold Co., 1963).
9. Harada, Y. "High Temperature Corrosion in Heavy Oil Firing Boilers," *Proc. Fifth Int. Cong. on Metallic Corrosion* (Houston, TX: National Association of Corrosion Engineers, 1974).
10. Gilbert, P. T. *Corrosion Problems of the Petroleum Industry* (London: Society of Chemical Industry, 1960).
11. Cheremisinoff, P. N., and R. A. Young. *Pollution Engineering Practice Handbook* (Ann Arbor, MI: Ann Arbor Science Publishers, Inc., 1975).
12. Cheremisinoff, N. P. *Applied Flow Measurement: Fundamentals and Technology* (New York: Marcel Dekker, Inc., 1979).