NAMDARAN
PETROGAS INDUSTRIES

صنایع پتروگاز نامداران




# QUICK OPENING CLOSURE

## درِ سریع باز شونده

# QUICK OPENING CLOSURE

## Introduction

Namdaran Petrogas Industries is a leading company in the design and manufacture of pressure parts and pipeline equipments for the Oil & Gas, Petrochemical and other process industries.

## Description

Namdaran Petrogas Industries closures provide horizontal or vertical access to pipeline pig traps, filters, coalescers, strainers, separators, meter skid systems, hydrocyclones, or any other type of pressure vessels. Our closures can be operated safely at remarkable speed with no special tools required. All sizes of closure can be opened or closed by one person in less than one minute.

## Features

- The closures are available to suit a wide variety of vessel sizes and pressures, from 6" to 64" diameter and any pressures from Class 150 up to Class 2500.
- The closures are designed to meet requirements of ASME VIII Div.1. Furthermore, alternative pressure vessel design codes, such as ASME VIII Div.2, PD5500 and EN13445 can also be accommodated.
- The locking mechanism incorporates a hand operated pressure warning screw, which prevents the door being unlocked until there is no residual pressure inside the vessel.
- The stress and strain analysis has been successfully performed by Ansys software in order to meet the design code requirements.




## Horizontal closure

The horizontal Closure must be installed truly horizontal. Launch and receive vessels which are inclined or declined to the horizontal can be supplied with a mitred closure weld preparation to keep the Closure in the horizontal position.Therefore, this requirement should be clearly specified, as a longer forging will be required.

## Vertical closure

The vertical Closure must be installed truly vertical.

## Statement of Code Compliance

A manufacturer's statement of code compliance can be furnished affirming that the closure is fabricated in accordance with the requirements of an applicable code such as ASME, API 6H, API 6A, ANSI or customer specifications.

| WORKING PRESSURE BY CLASSES, psig | | | | | | |
|---|---|---|---|---|---|---|
| Temp. ,°F | 150 lb. | 300 lb. | 600 lb. | 900 lb. | 1500 lb. | 2500 lb. |
| -20 to 100 | 285 | 740 | 1480 | 2220 | 3705 | 6170 |
| 200 | 260 | 675 | 1350 | 2025 | 3375 | 5625 |
| 300 | 230 | 655 | 1315 | 1970 | 3280 | 5470 |
| 400 | 200 | 635 | 1270 | 1900 | 3170 | 5280 |
| 500 | 170 | 600 | 1200 | 1795 | 2995 | 4990 |
| 600 | 140 | 550 | 1095 | 1640 | 2735 | 4560 |
| 650 | 125 | 535 | 1075 | 1610 | 2685 | 4475 |
| 700 | 110 | 535 | 1065 | 1600 | 2665 | 4440 |
| 750 | 95 | 505 | 1010 | 1510 | 2520 | 4200 |
| 800 | 80 | 410 | 825 | 1235 | 2060 | 3430 |

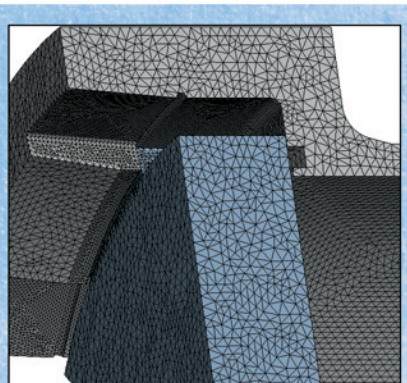

صنایع پتروگاز نامداران

NAMDARAN
PETROGAS INDUSTRIES

## Main Materials

Standard materials used in closures are made according to ASTM specifications as well as ASME Section VIII, Boiler and Pressure Vessel Code.

- Closure hub materials are made from SA 350 LF2, SA 105, and A694 F42/52/60/65/70.
- The standard material for door are SA 516 Grade 70, A694 F42/52/60/65/70.
- Materials for special applications, including hinges for offshore service can be furnished upon request.
- On request, we can manufacture closure from material that fully comply with the requirement of NACE MR 0175 /ISO 15156.

## Seal Material

Pressure, temperature and chemical environments need to be considered when selecting seal material.

- The standard seal material for Namdaran closures is Nitrile (NBR) which has excellent resistance to the effects of most hydrocarbons good flexibility at low temperature. The maximum operating temperature is 250 °F / 121 °C
- FKM (Viton) seal are recommended for higher temperature applications up to 400 °F / 204 °C
- Ethylene Propylene (EP) Rubber compounds is available for glycol and steam service up to 300 °F / 149 °C
- Other Elastomers are available for specific service conditions.



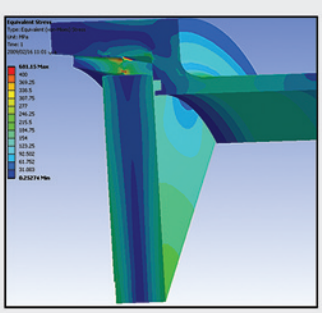

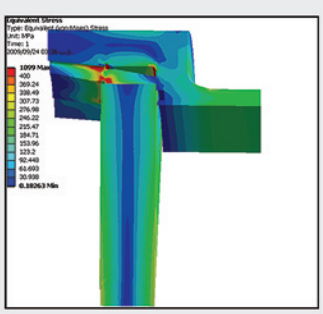



## How to Order Namdaran Closures

To assure proper handling of your order, the following information must be provided:

- Maximum design pressure or ANSI rating and minimum and maximum design temperature.
- Design factor.
- Maximum field test pressure.
- O.D., wall thickness and material grade of the matching pipe.
- Service to determine proper seal material.
- Specific codes or special material requirements applicable to the closure design.

TÜV NORD
TÜV NORD Iran PJS
Product Conformity Assessment

ISOTS 29001:2003
CERTIFIED ORGANIZATION
URS

ISO 9001
CERTIFIED ORGANIZATION
URS
UKAS QUALITY MANAGEMENT
043-A

# Bayonet type quick opening closure ANSI 600# rating
# Dimension and Weight data

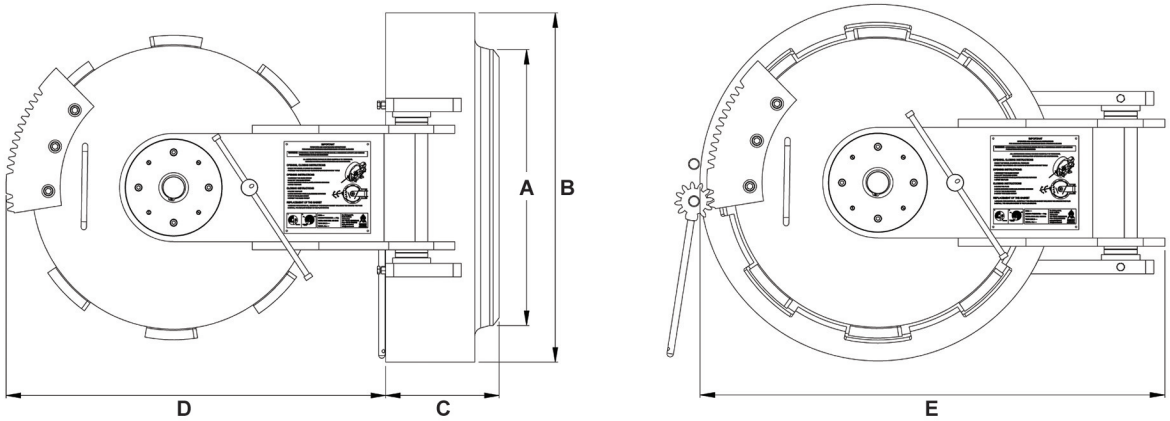


| Size | A (mm) | B (mm) | C (mm) | D (mm) | E (mm) | Weight (kg) |
|---|---|---|---|---|---|---|
| 6” | 168 | 220 | 76 | 221 | 280 | 52 |
| 8” | 219 | 292 | 100 | 314 | 364 | 65 |
| 10” | 274 | 365 | 120 | 375 | 465 | 75 |
| 12” | 324 | 420 | 146 | 450 | 535 | 130 |
| 14” | 356 | 462 | 161 | 506 | 604 | 150 |
| 16” | 406 | 520 | 180 | 540 | 638 | 185 |
| 18” | 457 | 587 | 195 | 633 | 764 | 255 |
| 20” | 510 | 645 | 210 | 675 | 825 | 360 |
| 22” | 559 | 716 | 226 | 761 | 924 | 510 |
| 24” | 610 | 780 | 255 | 835 | 965 | 690 |
| 28” | 711 | 948 | 291 | 952 | 1165 | 880 |
| 30” | 762 | 1000 | 300 | 1046 | 1260 | 1,270 |
| 36” | 914 | 1200 | 350 | 1253 | 1512 | 2,210 |
| 42” | 1067 | 1341 | 375 | 1398 | 1726 | 3,350 |
| 48” | 1219 | 1570 | 400 | 1590 | 1966 | 4,290 |
| 54” | 1372 | 1739 | 425 | 1781 | 2207 | 5,680 |
| 56” | 1422 | 1812 | 435 | 1845 | 2287 | 6,940 |
| 60” | 1524 | 1956 | 450 | 1973 | 2447 | 8,160 |
| 64” | 1626 | 2100 | 470 | 2010 | 2550 | 9,490 |

Note :

1. All dimensions are approximate.
2. For other rating and sizes, Please Contact our sales office Company.

**Head Office:** 3rd Floor, No. 12, Naghdi St., North Mofateh St., Tehran-Iran
Tel No: (+98-21) 88522258-60 Fax No: (+98-21) 88753763
**Sales Office:** Unit 11, No. 3, 8th St., Khaled Slamboly Ave., Tehran-Iran
Tel No: (+98-21) 88710234-5 Fax No: (+98-21) 88717457

**Factory:** No. 61, Keyhan Alley, Shams Abad, Km 35 Qom Highway
Tel No: (+98-21) 56225112-14 Fax No: (+98-21) 56225115
**E-mail:** info@namdaran.ir **Website:** www.namdaran.ir

Design by Moballeghan Co. Fax: (+98-21) 88736088