NAMDARAN
PETROGAS INDUSTRIES

شرکت صنایع پتروگاز نامداران

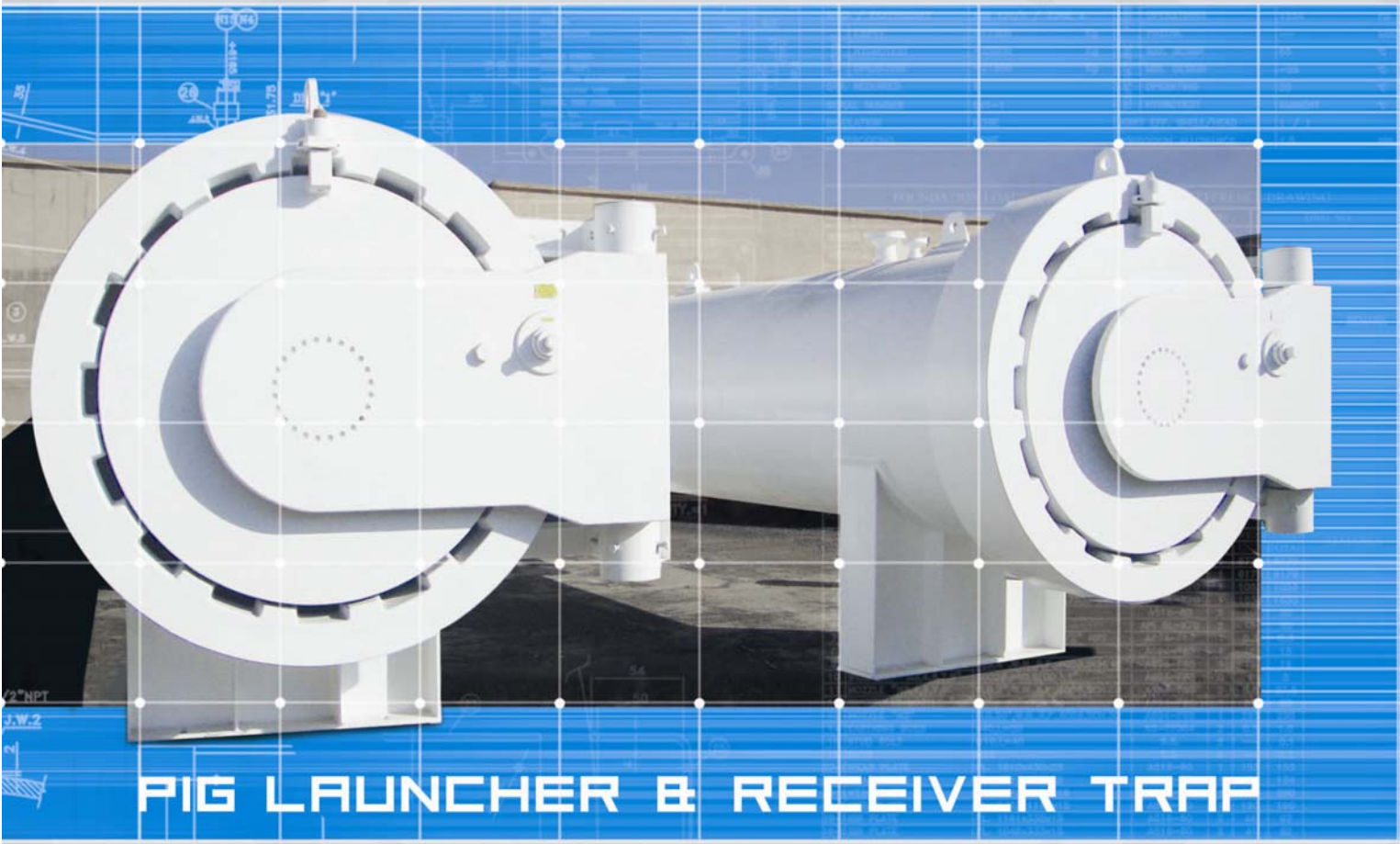

PIG LAUNCHER & RECEIVER TRAP

NAMDARAN
PETROGAS INDUSTRIES

INTRODUCTION

Namdaran Petrogas Industries is a leading company in design and manufacturing of pressure parts and pipeline equipment in the Oil and Gas, petrochemical and other process industries.



PIG LAUNCHER & RECEIVER

ISO 9001
CERTIFIED ORGANIZATION
043-A

ISOTS 29001:2003
CERTIFIED ORGANIZATION

DESCRIPTION

Pig Launcher and Receiver Traps are custom manufactured for sub-sea, off-shore and onshore applications. Pig launcher is used to launch the pig into the pipeline, and pig receiver is used to receive the pig after they have made a successful launch. The choice of these pig traps will depend on the type of pig to be run and pipeline design conditions.

All equipment are designed and manufactured according to pipeline and vessel Code Standard (NACE, ASME VIII, BS 5500 and ANSI/ASME B31.3, B31.4, B31.8, etc).

Our capacity of production allows matching pipe ranging from 3" to 56" with ANSI Ratings of 150# to 2500#, using carbon steel, stainless steel and alloy steel materials.

MULTIPLE UNITS APPLICATION

These units are designed to allow the sequential launching or receiving of pigs and spheres, in conjunction with release mechanism either flapper or finger. The launch process can be controlled remotely enabling traps to be installed on unmanned platforms and facilities. This sequential launching or receiving is to take place without having to repeatedly de-pressurize and re-pressurize after each launching or receiving. The process can also be controlled from a local or remote location. This is particularly relevant on unmanned platforms such as offshore platforms and sour service applications.

The launch of spheres or pigs is controlled by automatic or manual release mechanism which allow individual sequential launching into the pipeline.

From basic body to a skid-mounted, fully-automated unit can be provided to meet client exact requirements. A fully staffed and experienced engineering department can provide all the design disciplines necessary to complete scraper trap packages like structural design, piping stress analysis, and instrumentation logic.

Namdaran Petrogas Ind. will design systems to meet specific operational requirements. This can include and not limited to:

- Multiple valve operation
- Automatic or manually operated sphere release mechanism
- Integrated skid mounted packages

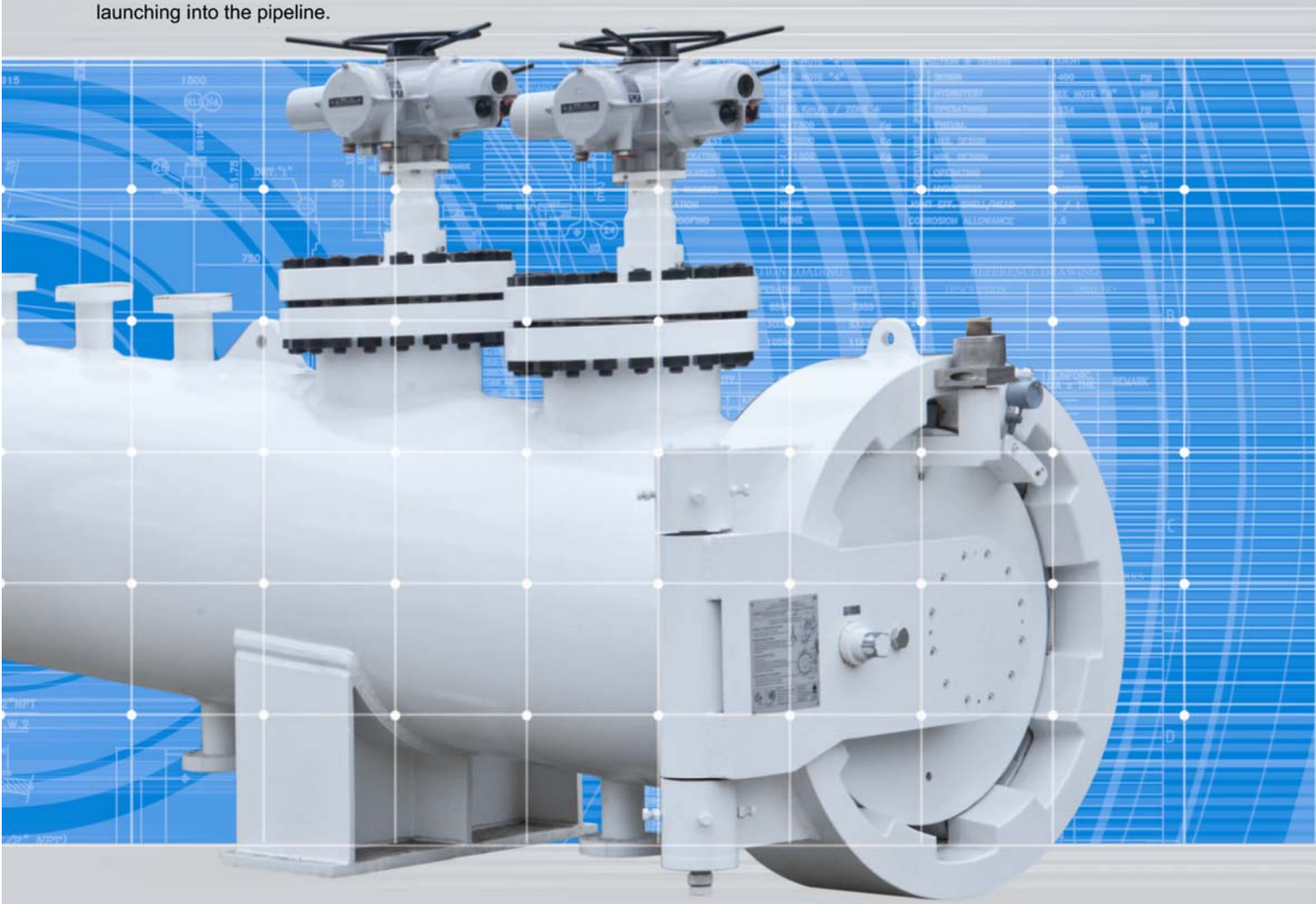

ACCESSORIES & OPTIONS

Optional features and accessories equipment include:

- Bi-directional Trap Systems
- Pig signalers (intrusive or non-intrusive)
- Skid mounted
- Pig Launching /Receiving Systems(manual or automatic)
- Inclined, Declined or Vertical Construction
- Pig Storage
- Basket
- Local/Remote control panel (manual or automatic)
- Sun shade
- All instruments
- Pig release mechanism flapper type
- Pig release mechanism finger type
- Mechanical safety interlock device
- Switch for closure

PIG SIGNALER

- All pig signalers are bi-directional due to a pivot less tumbler mechanism, which utilizes laminated trigger blades for use with on-line inspection pigs.
- Pig signalers are economically priced units and are very simple to install and operate, providing adjustable on site penetration and giving the operator simple visual indication with a single action reset.
- Pig signalers are manufactured in four pressure 600#, 900#, 1500# and 2500#. Standard models are designed for use at temperatures from -29ºC to 200ºC, dependent upon the flowing products

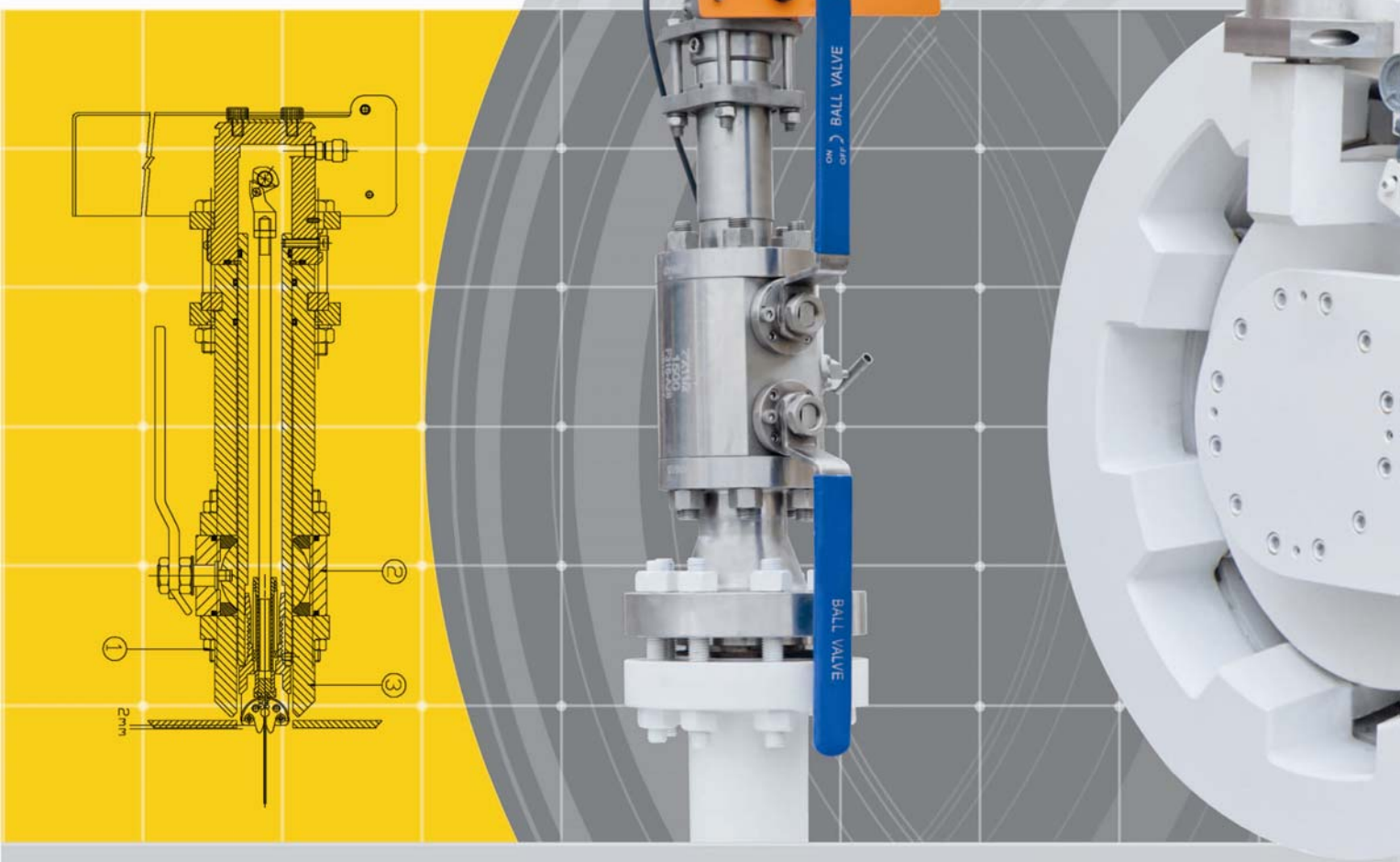

and pressure in the line. Alternative elastomer seals can be provided for operating temperatures outside this range.

- Pig signalers are available in a wide range of models, mechanically operated signal flags, electrical auto resetting switches, or mechanical and electrical signals in combination, to suit either welded, or flanged type mounting.
- Pig signalers can be supplied with integral valve to allow removal under line pressure.
- Pig signalers feature a unique trigger penetration adjustment facility to cater for variations in line thickness and flange standout.

Double Block and Bleed (DBB) valves have been evolved to replace the process of bolting together individual valves to provide dual isolation.



QUICK OPENING CLOSURE

Namdaran Petrogas Industries closures provide horizontal or vertical access to pipeline pig traps, filters, coalesce's, strainers, separators, meter skid systems, hydro cyclones, or any other type of pressure vessel. The quick opening closures can be operated safely at remarkable speed All size of closures can be opened or closed by one person in less than one minute.

- The closures are available to suit a wide variety of vessel sizes and pressures, from 6" to 120" diameter and any pressures from Class 150 up to Class 2500 or higher upon request.
- The closures are designed to meet requirements of ASME VIII Div. I or II. furthermore, alternative pressure vessel design codes, such as ASME VIII Div. 2, PD5500 and EN13445 can also be accommodated.
- The locking mechanism incorporates a hand operated pressure warning screw, which prevents the door being unlocked until there is no residual pressure inside the vessel.
- The closure hub and door are manufactured from materials that fully comply with the requirements of ASME SEC. II / ASTM and NACE MR 01-75 / ISO 15156 Latest Edition upon request.
- The stress and strain analysis has been successfully performed by Ansys software in order to meet the design code requirements.

NAMDARAN
PETROGAS INDUSTRIES

SAFETY LOCKING DEVICE

When the pig trap is pressurized a pressure locking device will be improvised to prevent opening which on released condition will warn the operator of a possible hazard unless the pressure in the pig trap is completely relieved. Opening of the closure will be impossible unless the safety lock is released .engaging the safety lock will be possible only when the closure is closed and it will be designed such that there is no risk of blockage. The device will be constructed and located so that they cannot readily be rendered inoperative, also the device will be easily accessible for inspection.

PIG RECEIVER

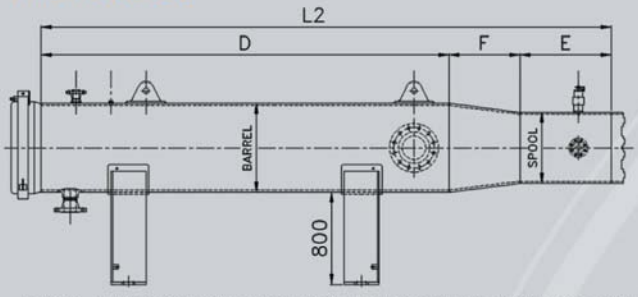

PIG LAUNCHER

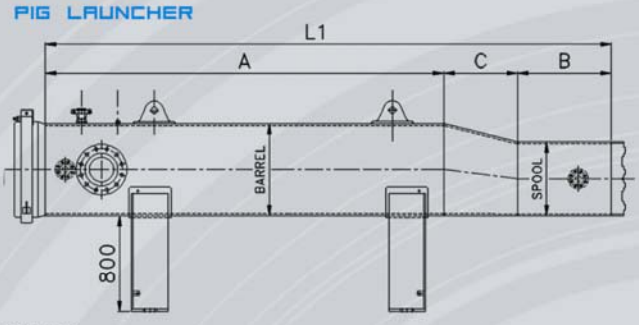

PIG LAUNCHER AND RECEIVER DIMENSIONS FOR GAS PIPELINE

BARREL (in)	10	12	16	16	20	24	30	36	42	48	48	56	64
MAIN LINE (in)	6	8	10	12	16	20	24	30	36	40	42	48	56
A (mm)	3230	4100	3990	3990	4300	3000	3200	3400	3850	3800	3800	3580	3650
B (mm)	500	500	500	600	600	1000	1000	1000	1500	1500	1500	1500	1500
C (mm)	178	203	356	356	508	508	610	610	610	711	711	915	915
L_1 (mm)	3908	4803	4846	4946	5408	4508	4810	5110	5960	6011	6011	5995	6065
D (mm)	3350	3200	4300	4360	4750	3650	3850	4000	4350	4450	4450	4450	4600
E (mm)	500	500	500	600	600	1000	1000	1000	1500	1500	1500	2000	2000
F (mm)	178	203	356	356	508	508	610	610	610	711	711	915	915
L_2 (mm)	4028	3903	5156	5316	5858	5158	5460	5610	6460	6661	6661	7365	5715
KICKER (in)	4	4	4	4	6	8	8	10	12	16	16	16	20
P.G (in)	1/2	1/2	1/2	1/2	1/2	1/2	1/2	1/2	1/2	1/2	1/2	1/2	1/2
PIG SIG. (in)	2	2	2	2	2	2	2	2	2	2	2	2	2
VENT (in)	2	2	2	2	4	4	4	4	4	4	4	4	4
DRAIN (in)	4	4	4	4	4	4	4	4	6	6	6	6	6
PRESSURIZER	2	2	2	2	2	2	2	2	2	2	2	2	2
TROLLY	-	-	-	-	-	-	-	-	yes	yes	yes	yes	yes
JIB CRAIN	-	-	-	-	-	yes	yes	yes	yes	yes	yes	yes	yes
CAPACITY (ton)	-	-	-	-	-	1	1	1	2	2	2	3	3
BASKET	-	-	-	-	-	yes	yes	yes	yes	yes	yes	yes	yes

Remark:

- Dimensions are approximate and may change without notice.



PIG LAUNCHER

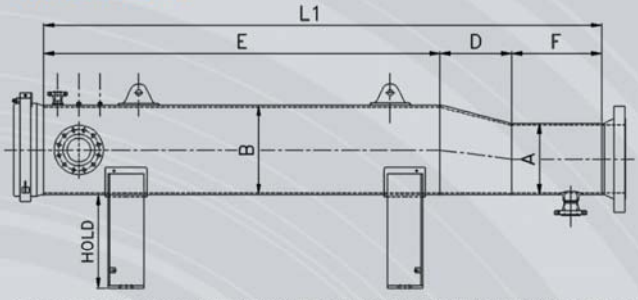

PIG RECEIVER

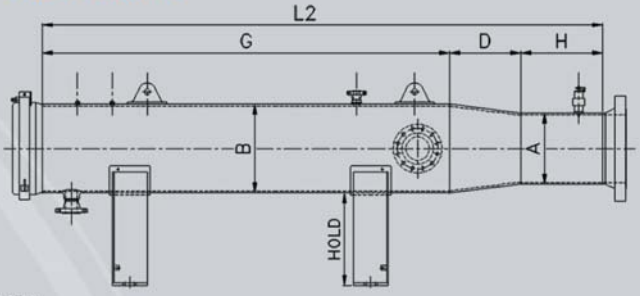

OIL PIG LAUNCHER AND RECEIVER DIMENSIONS (IPS-M-PI-130)

Size		Dimension of pig Launcher & receiver traps for Intelligent pig (S4L-6516)					Other				
A (in)	B (in)	E (mm)	G (mm)	H (mm)	L1 (mm)	L2 (mm)	F (mm)	D (mm)	Kicker (in)	Vent (in)	Drain (in)
6	8	3000	3000	3000	4152	6152	1000	152	2	2	2
8	10	3000	3000	3000	4178	6178	1000	178	2	2	2
10	12	3000	3000	3000	4203	6203	1000	203	3	2	2
12	16	3000	3000	3000	4356	6356	1000	356	4	2	2
14	18	3000	3000	3000	4381	6381	1000	381	4	4	2
16	20	3000	3000	3000	4508	6508	1000	508	4	4	2
18	24	3000	3000	3000	5008	6508	1500	508	6	4	2
20	24	3000	3000	3000	5008	6508	1500	508	6	4	4
24	30	3000	3000	3000	5110	6610	1500	610	8	4	4
26	30	3000	3000	3000	5110	6610	1500	610	8	4	4
28	32	3000	3000	3000	5110	6610	1500	610	10	4	4
30	36	3000	3000	3000	5110	6610	1500	610	10	4	4
32	36	3000	3000	3000	5110	6610	1500	610	10	4	4
36	42	4000	4000	4000	6610	8610	2000	610	12	4	4
42	48	4000	4000	4000	6710	8710	2000	710	12	4	4
48	60	4000	4000	4000	6710	8710	2000	710	16	4	4
52	60	4000	4000	4000	6710	8710	2000	710	16	4	4
56	60	4000	4000	4000	6710	8710	2000	710	16	4	4





PIG HANDLING SYSTEM

Namdaran Petrogas industries provide custom made pig handling system including crane, trolley and basket for pigging station. This system can handle, load, and unload the pigs without using man-power and minimize the work accidents. Each Pig handling and trolley system is designed and manufactured to meet the requirements of each client. Pig handling system consists of a trolley and a crane; trolley can be either manual, or automatic (which is powered by an electromotor).

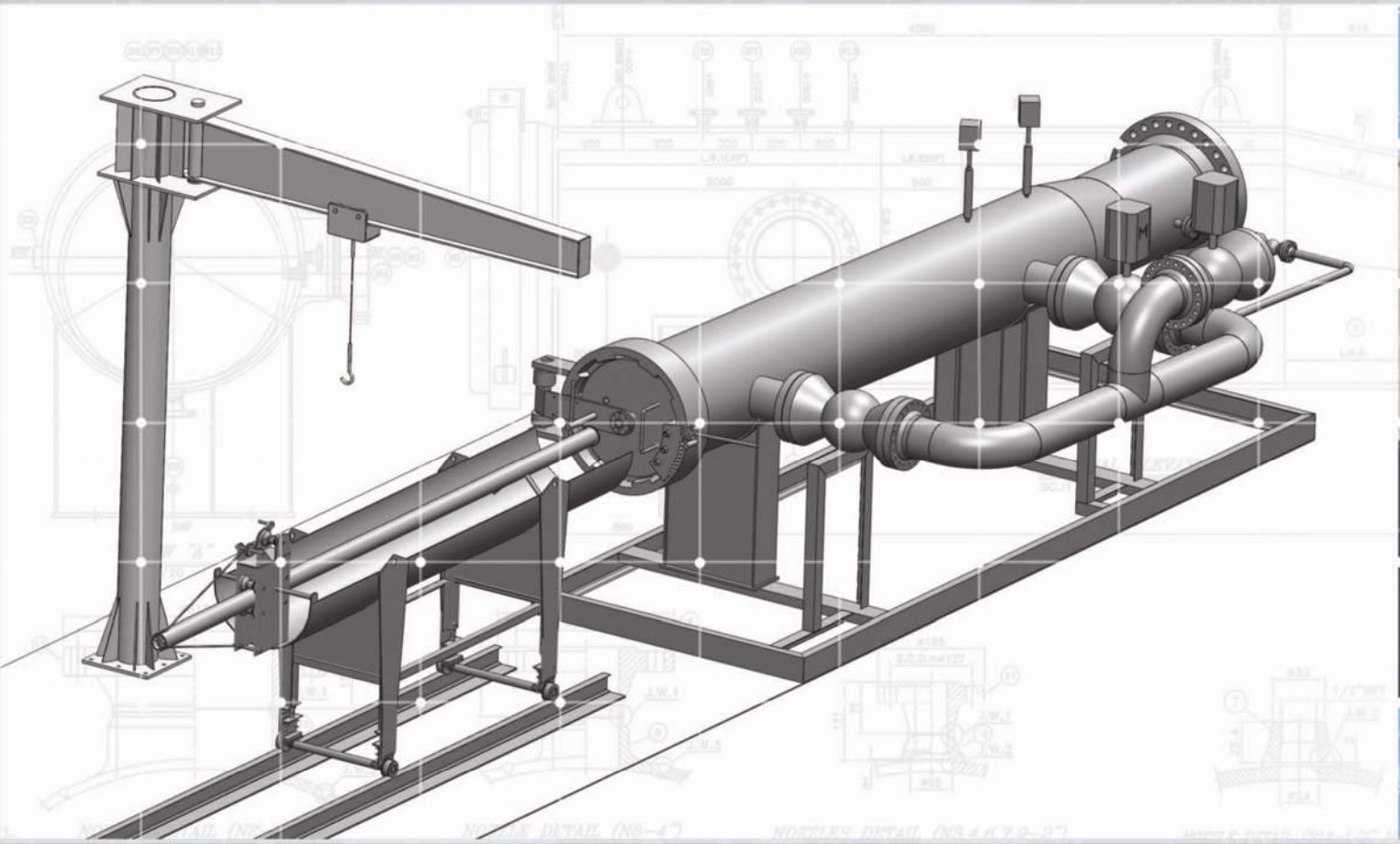

CENTRAL OFFICE

2nd Floor, No. 12, Naghdi St., North Mofateh St., Tehran-Iran
Tel: +98 (21) 88522258-60 Fax: +98 (21) 88753763

SALE OFFICE

Unit 11, 5th Floor, No. 5, 8th St., Khaled Eslamboli St.,
Tehran-Iran Tel: +98 (21) 88710234-5 Fax: +98 (21) 88717457

FACTORY

No. 61, Keyhan Alley, Shams Abad, Km 35 Qom Highway, Tehran-Iran
Tel: +98 (21) 56225112-4 Fax: +98 (21) 56225115

www.namdaran.ir
info@namdaran.ir

Photography, Design & Printing by Moballeghan Co. Fax: (+98-21) 88736088